Dongguan Lixinwei Electronics Co., Ltd

Antenna Specification for Approval

Customer Name: Guangdong Shiji Technology Co., Ltd

address: Address: No. 2 (5), Sanlian Longtan Area, Lianshang Town, Liannan Industrial Zone, Chenghai District, Shantou City

Product Name: 2.4G antenna .

产品料号:

Part NO.: C113H-IPXSG.T2401-360 .

制 表:

Write By: Zhou Min .

日 期:

Issued Date: 2022-12-1 .

customer

R&D Dept	Business Dept	Approved By

supplier

R&D Dept	Engineer Dept	Approval

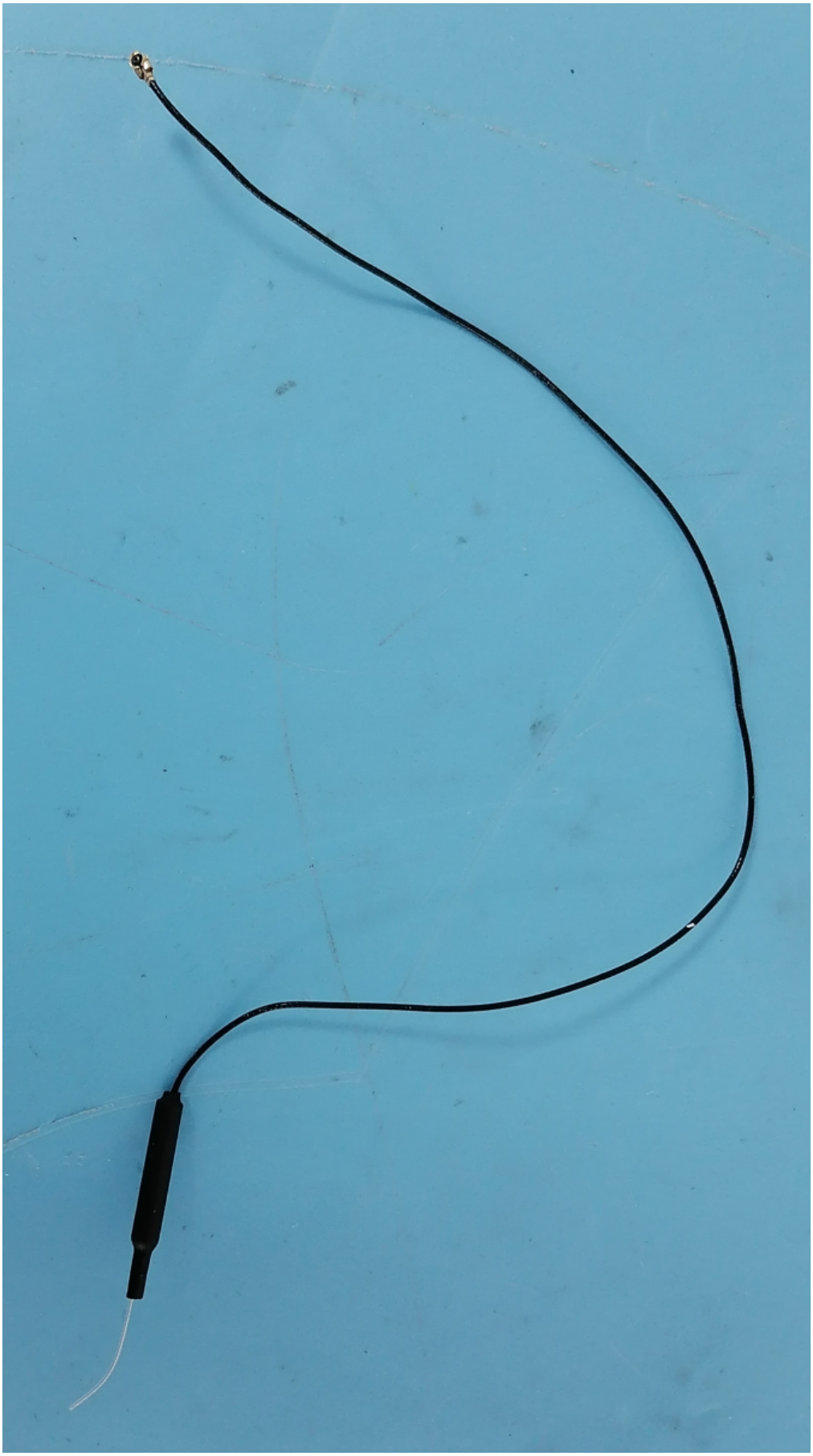

Product Specification

A. Electrical Characteristics

Frequency 2400MHz ~2500MHz
VSWR <2.0
Efficiency >77.98%
Impedance 50 Ohm
Polarization Line
Gain 2.29DBi

B. Material & Mechanical Characteristics

Material of Radiator Cu
Cable Type 1.13 black
Connector Type : IPEX1
Dimension

C. Environmental

Operation Temperature - 30 °C ~ + 80 °C
Storage Temperature - 30 °C ~ + 85 °C

Test Equipment & Conditions

1. Network Analyzers :

Agilent 8753D 5071B

2. Communications Test Set:

Agilent E5515C

3. 3D Chamber Test System

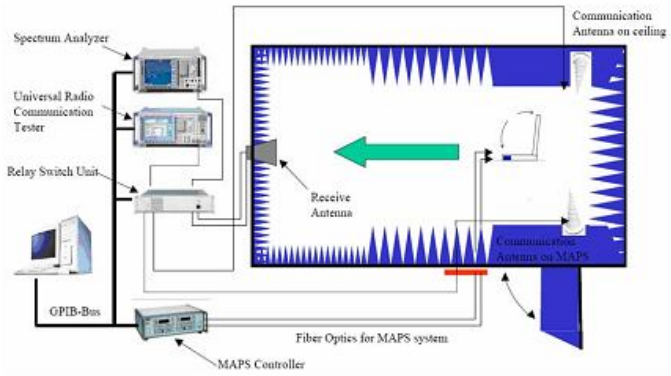

(Testing by 3D anechoic chamber)

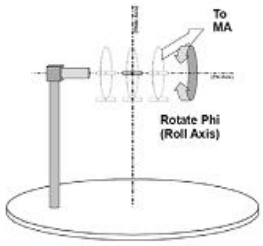

Phi axis test

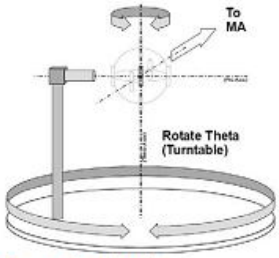

Theta axis test

Effiency &Gain

Freq (MHz)	Effi (%%)	Gain (dBi)
2400	65.43	1.92
2410	64.45	1.95
2420	64.35	1.93
2430	62.37	1.96
2440	56.26	2.23
2450	66.40	2.23
2460	66.63	2.29
2470	62.74	1.96
2480	62.40	1.98
2490	58.31	1.95
2500	57.47	1.99

S11

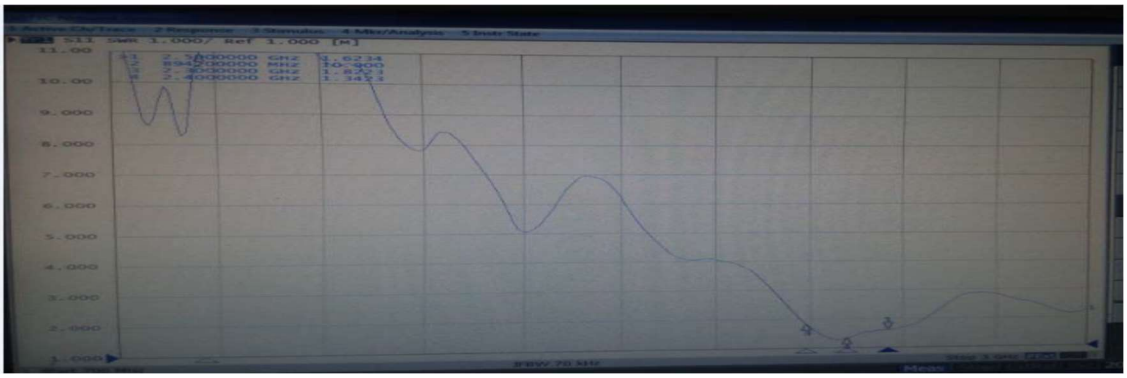

Radiation Pattern:

2400 2410 2420 2430 2440 2450 2460 2470 2480 2490 2500

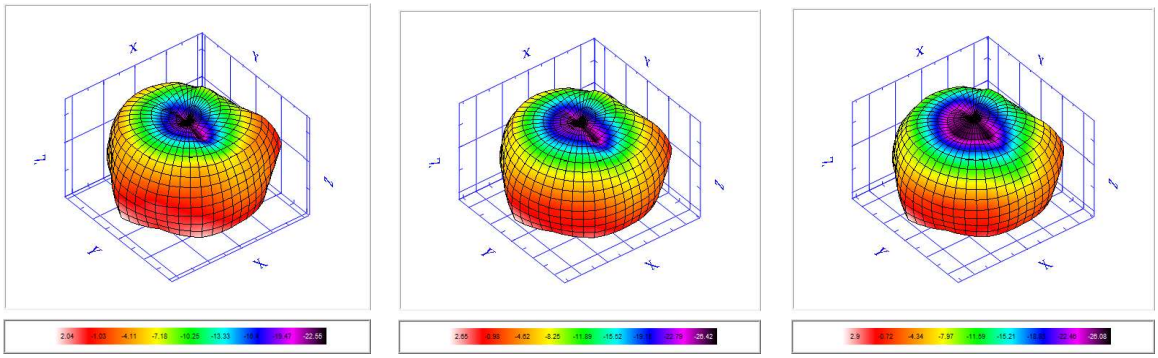

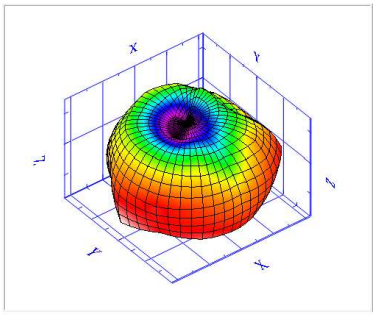
3 -0.04 -3.08 -6.12 -9.15 -12.19 -15.23 -18.27 -21.31

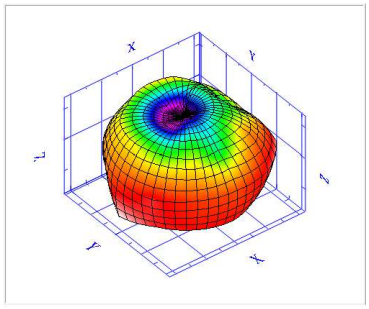
2.82 -0.22 -3.26 -6.3 -9.34 -12.37 -15.41 -18.45 -21.49

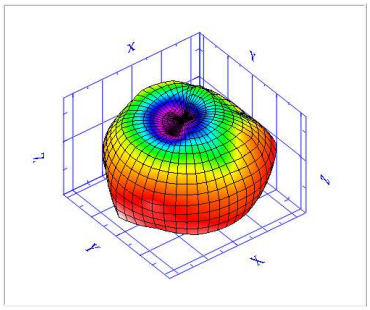
2.7 -0.49 -3.66 -6.87 -10.07 -13.26 -16.46 -19.64 -22.83

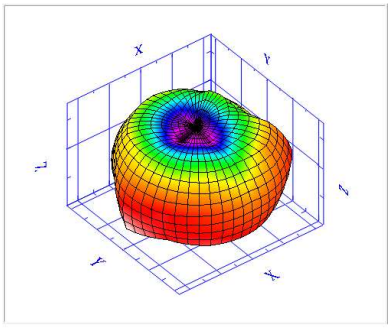
2.83 -0.39 -3.6 -6.82 -10.03 -13.25 -16.46 -19.67 -22.89

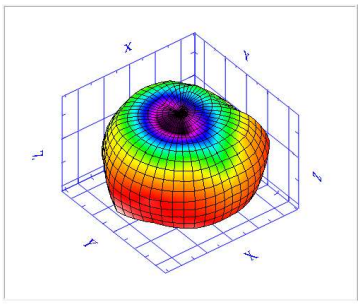
2.84 -0.75 -4.34 -7.93 -11.52 -15.11 -18.7 -22.29 -25.88

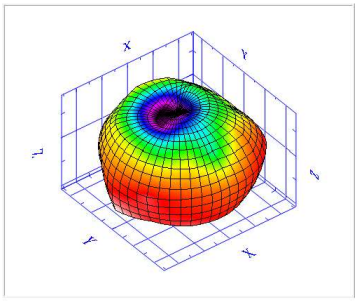
2.89 -0.94 -4.18 -7.71 -11.24 -14.77 -18.3 -21.84 -25.37

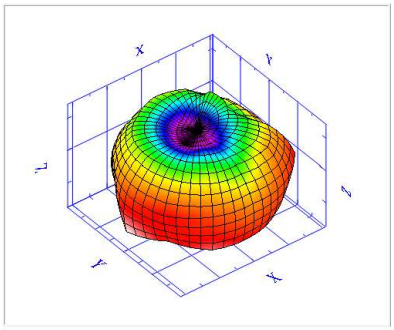
2.63 -0.35 -3.32 -6.3 -9.27 -12.25 -15.22 -18.19 -21.17

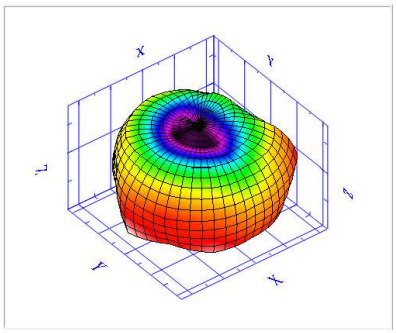
2.7 -0.52 -3.73 -6.95 -10.17 -13.38 -16.6 -19.81 -23.03