Wireless Control System Installation

⚠ WARNING Shork Hazard. May result in serious inquiry or death.
Turn off power at circuit breaker before installing the unit.

One Power Pack 0-10V dimming module + At least one wireless transmitter.

The wireless system includes

PIR sensor
FCC ID:2AQ3JBMS401

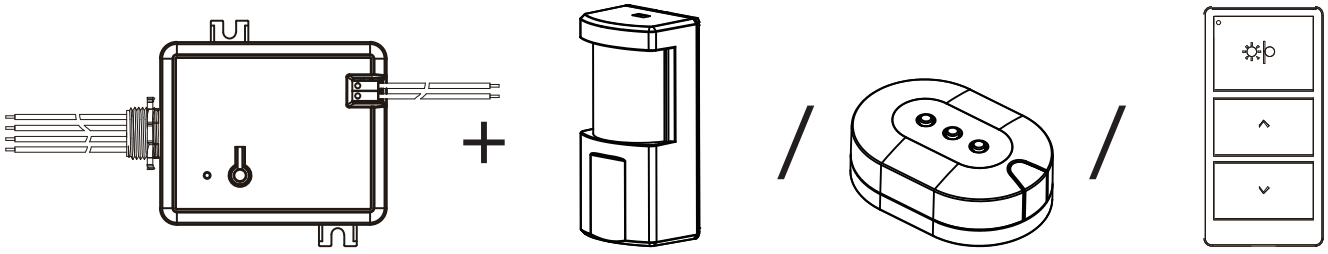

Power Pack 0-10V dimming module
AC 120-277V

PIR occupancy sensor
AAA battery

Daylight sensor
CR2450 3V

Manual control dimmer
CR2032 3V

Note:

1. One Power Pack dimming module can be linked with 4 PIR sensors , 5 manual control dimmers , and 1 daylight sensor at most .
2. One PIR sensor / one dimmer / one daylight sensor can control all dimming modules in the RF range , up to 30m .
3. Do not fixed install components before setting up all parameters ideally .
4. This system use Radio Frequency 433.96MHZ communication technology

STEP 1: Install Power Pack 0-10V dimming module

Install in center of room to maximize RF coverage.

Wiring Schematic

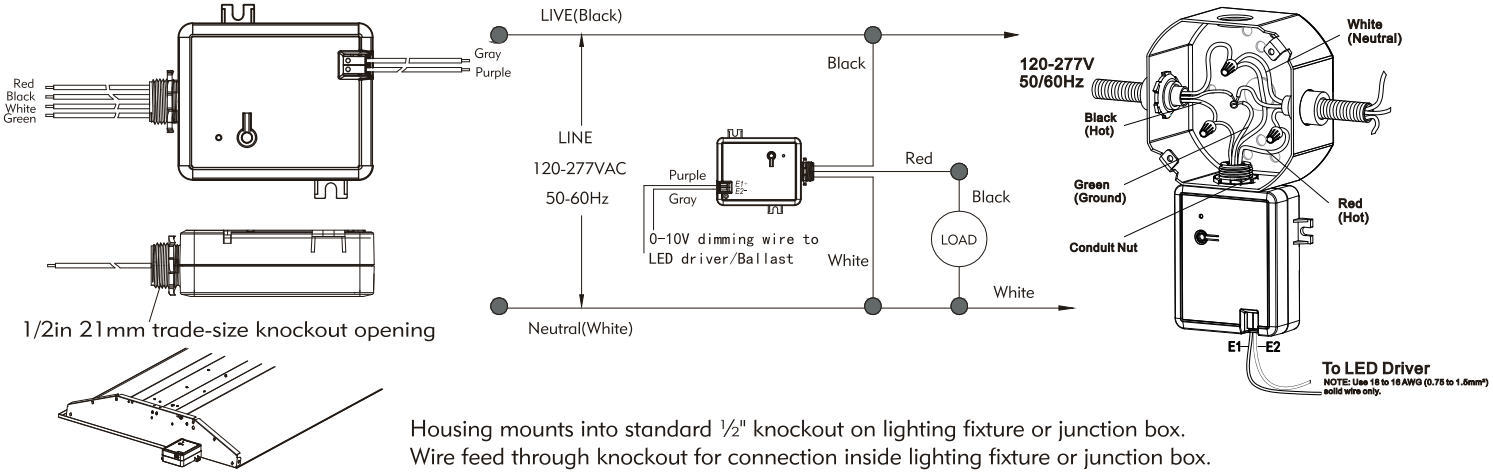

Housing mounts into standard ½" knockout on lighting fixture or junction box.
Wire feed through knockout for connection inside lighting fixture or junction box.

STEP 2: Associate Wireless Transmitters to Power Pack 0-10V Dimming Module

Note : ***Insure that in the same time there is only this dimming module is being set up in the building , or transmitter from other system maybe linked incorrectly .***

1 Pair the Wireless manualcontroller with dimming module

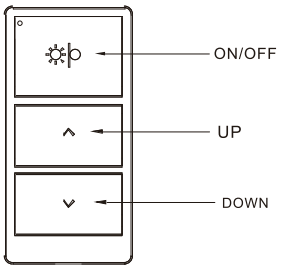

Quick Setup:

1. Push PAIR on Power Pack0-10V dimming module the small led on dimming module will flash quickly
2. Push ON/OFF button for 3s to PAIR with dimming module
   You will hear a beap indicate the controller has linked with dimming module
3. Try the buttons to see if light is successfully controlled.

2 Pair the PIR sensor to the dimming module

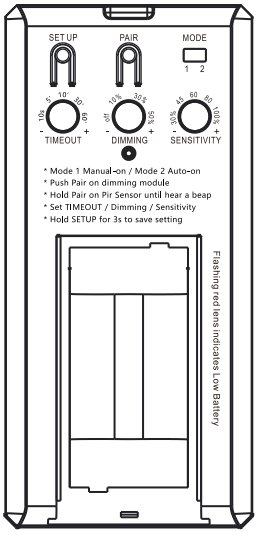

Quick Setup:

Chose Mode 1 Occupancy mode : light need to be manually switched on with manual controller , delay time 30min , automatically off if no people detected in 30min . This mode is usually for meeting room .
Mode 2 Auto-on : Light automatically on once detect people , automatically off or go down to dimming level after people leave .

1. Push PAIR on Power Pack 0-10V dimming module , the small led on dimming module will flash quickly .
2. Push PAIR on PIR sensor for 3s.
   You will hear a beep indicate the sensor has linked with the dimming module.
3. Set Timeout: 10s (as test mode) 5min 10min 30min 60min.
   Set Dimming level: Off 10% 30% 50% .After people leave , light will off or dim to this level automatically.
   Set Sensitivity: 30% 45% 60% 80% 100%.
4. Hold SETUP for 3s to save setting , small led light on sensor flash twice indicate set up .

Note: Every time you change settings , DO remember to HOLD SETUP for 3s to save .
Flashing red lens indicates Low Battery / Customized default setting is available

Default Setting :
Timeout : 10min
Dimming : Off
Sensitivity : 100%

3 Pair the daylight sensor to the dimming module

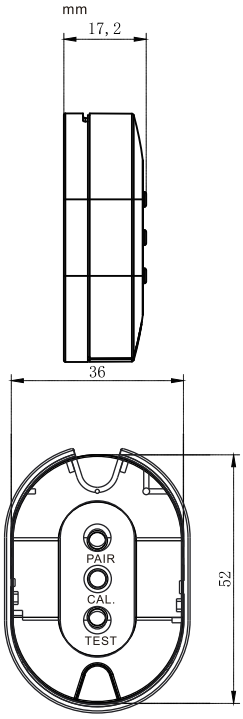

Quick Setup:

1. Push PAIR on Power Pack 0-10V dimming module,the small led on dimming module will flash quickly .
2. Push PAIR for 3s on Daylight Sensor.
   You will hear a beep indicate the sensor has linked with the dimming module.
3. Set lights in room to desired light level with manual controller.
4. Hold CAL. until red light flash to calibrate the daylight sensor .
   The sensor will collect the Current Light Level in room , and dim the light according to this level you calibrate . When you push CAL. , please do not point the transparent hole to strong light or very dark place , it may collect wrong light level . Find a place where is about 1-2m away from window with proper light level you want, point the daylight sensor (the transparent hole side , and don't cover the hole) to window with proper daylight , then hold CAL.until red light flash.
5. Hold TEST until red light flash to enter into test mode.
   Cover the sensor to see if the lights in room dim up , shine the sensor to see if lights dim down . It takes about 10 seconds to dim , if the performance is not that good , repeat last step to CAL. another light level .
6. After calibration , hold TEST for 3s until two small leds (green and red) on sensor flash once to quit test mode . Important , or battery will power off very soon . The sensor will quit test mode after 10 mins automatically .
   After quitting test mode , the sensor will not react and dim lights quickly as test mode .
   Because sun light changes very slowly , so the sensor is designed to react half an hour , so as to guarantee the battery life .

Note:

1. ***If you have several sensors or dimmers need to pair , remember always need to push the PAIR/TEST button on dimming module first , then pair one transmitter a time .***
2. ***You can skip any one of the step if you don't have the corresponding wireless transmitter .***
3. ***Push the PAIR/TEST button on dimming module for 5s , you will hear 4 beeps indicate exit all grouping .***

STEP 3: Temporarily mount the sensors

1.Recommended mount location for PIR sensor :

The mounting height should be between 6ft and 8ft (1.6m to 2.4m) , better beside the door and have a line-of-view of all room occupants (You can add up to 5 sensors to expand the detect range). Do NOT mount behind, or close to any hot object .

2.Recommended mount location for day light sensor :

Mount the sensor about 2m away from the window , the transparent cover should facing the window , so it can see most natural sunlight . DO NOT mount too close to electric lights .

STEP4 : Permanently locate the sensors

FCC Warning

This device complies with part 15 of the FCC Rules. Operation is subject to the following two conditions: (1) This device may not cause harmful interference, and (2) this device must accept any interference received, including interference that may cause undesired operation.

Any Changes or modifications not expressly approved by the party responsible for compliance could void the user's authority to operate the equipment.

Note: This equipment has been tested and found to comply with the limits for a Class B digital device, pursuant to part 15 of the FCC Rules. These limits are designed to provide reasonable protection against harmful interference in a residential installation. This equipment generates uses and can radiate radio frequency energy and, if not installed and used in accordance with the instructions, may cause harmful interference to radio communications. However, there is no guarantee that interference will not occur in a particular installation. If this equipment does cause harmful interference to radio or television reception, which can be determined by turning the equipment off and on, the user is encouraged to try to correct the interference by one or more of the following measures:

-Reorient or relocate the receiving antenna.

-Increase the separation between the equipment and receiver.

-Connect the equipment into an outlet on a circuit different from that to which the receiver is connected.

-Consult the dealer or an experienced radio/TV technician for help.