GARAGE HEATER WITH REMOTE INSTRUCTION MANUAL
MODEL: HA24-100E
HA24-150E

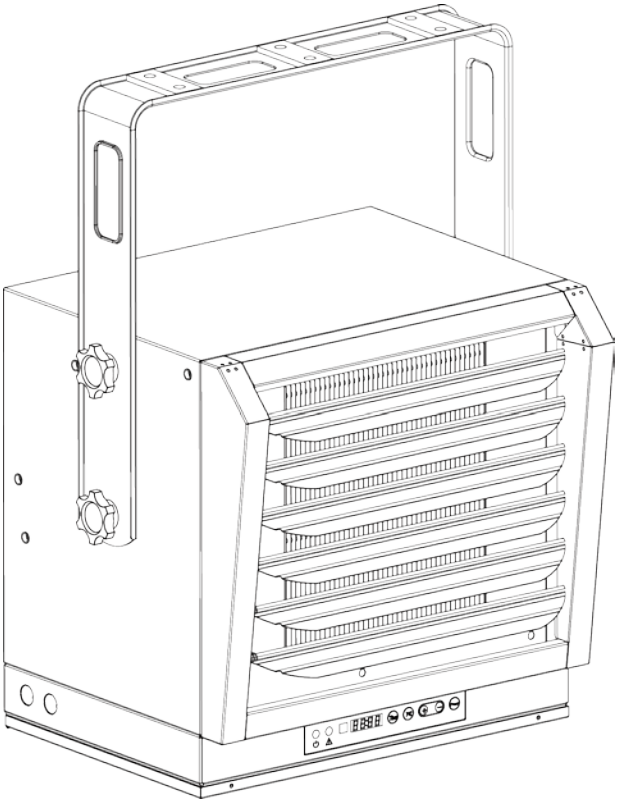

Figure 1

PET OWNERS WARNING: Health warning for some small pets, including birds, as they are extremely sensitive to the fumes produced during the first-time use of many appliances. These fumes are not harmful to humans but we recommend that you do not use your heater around birds and small pets during its initial use until the manufacturing corrosion (anti-corrosion) coatings burn off.

Technical Support: 1-866-206-0888

Service email: info@mecanair.net

TABLE OF CONTENTS

Important Instructions……3

Description and Specifications……4-5

General Safety Information……..... 6

Locating the heater……..7

Installation……..8-10

Connecting the power……11-14

Operating Instructions……15-17

Maintenance Instructions……17

IMPORTANT INSTRUCTIONS

When using electrical appliances, basic precautions should always be followed to reduce the risk of fire, electric shock, and injury to persons, including the following:

1. Read all instructions before installing or using this heater.
2. This heater is hot when in use. To avoid burns, do not let bare skin touch hot surfaces. Keep combustible materials, such as furniture, pillows, bedding, papers, clothes and curtains at least 3 feet (0.9 m) from the front of the heater and keep them away from the sides and rear.
3. Extreme caution is necessary when any heater is used by or near children or invalids and whenever the heater is left operating and unattended.
4. Always turn off the power of heater when not in use.
5. Do not operate any heater after it malfunctions, had been dropped or damaged in any manner. Disconnect power at service panel and have heater inspected by a reputable electrician before reusing.
6. Do not use outdoors.
7. This heater is not intended for use in bathrooms, laundry areas and similar indoor locations. Never locate heater where it may fall into a bathtub or other water container.
8. To disconnect heater, turn controls to off, and turn off power to heater circuit at main disconnect panel.
9. Do not insert or allow any foreign objects to enter any ventilation or exhaust opening as this may cause an electric shock or fire, or damage the heater.
10. Connect to properly grounded outlets only.
11. To prevent a possible fire, do not block air intakes or exhaust in any manner. Do not use on soft surfaces, like a bed, where openings may be blocked.
12. A heater has hot and arcing or sparking parts inside. Do not use it in areas where gasoline, paint, or flammable liquids are used or stored.
13. All wiring must be carried out by a certified electrician and comply with national and local electrical codes in the United States and Canada.
14. Use this heater only as described in this manual. Any other use not recommended by the manufacturer may cause fire, electric shock, or personal injury.
15. This heater may include a visual alarm to warn that parts of the heater are getting excessively hot. If the alarm turns on, immediately turn the heater off and inspect for any objects on or adjacent to the heater that may have blocked the airflow or otherwise cause high temperatures. DO NOT OPERATE THE HEATER WITH THE ALARM ILLUMINATING.

SAVE THESE INSTRUCTIONS

DESCRIPTION

The heavy-duty electric heater is designed for garages, workshops and similar locations. It features two heat settings, for a maximum heat production of 51615(150E) or 34410 (100E) BTU per hour. It includes horizontal and vertical air flow and a built-in thermostat with overheating safety thermal cut-out.

SPECIFICATIONS

150E

Model	Rating	Voltage	AMPS	BTU/hour
HA24-150E	15000W	240V	62.5	51,615

HEATER RATING & VOLTAGE	HEATER AMPS	FUSE SIZE	WIRE SIZE 60°C COPPER
15000W@240V	62.5A	80(A)	#6

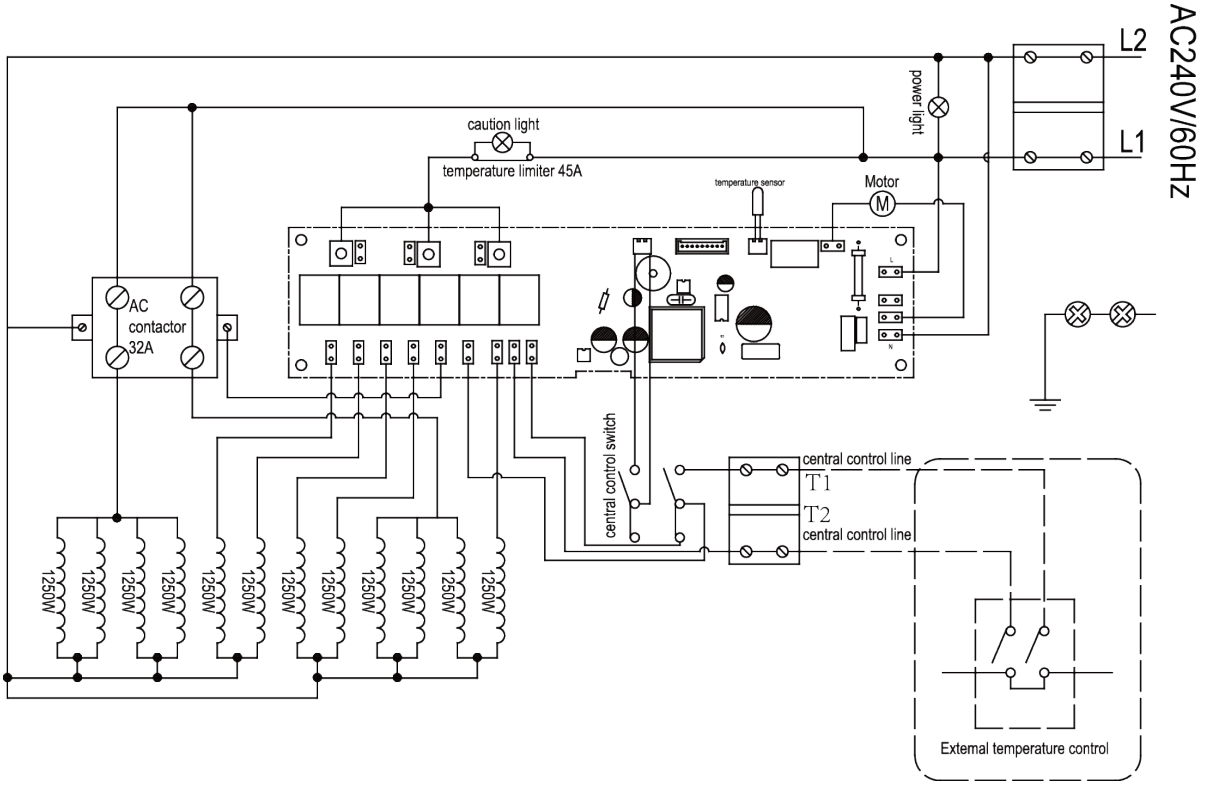

150E Circuit diagram Figure 2

100E

Model	Rating	Voltage	AMPS	BTU/hour
HA24-100E	10000W	240V	41.7	34，410

HEATER RATING & VOLTAGE	HEATER AMPS	FUSE SIZE	WIRE SIZE 60°C COPPER
10000W@240V	41.7A	55(A)	#8

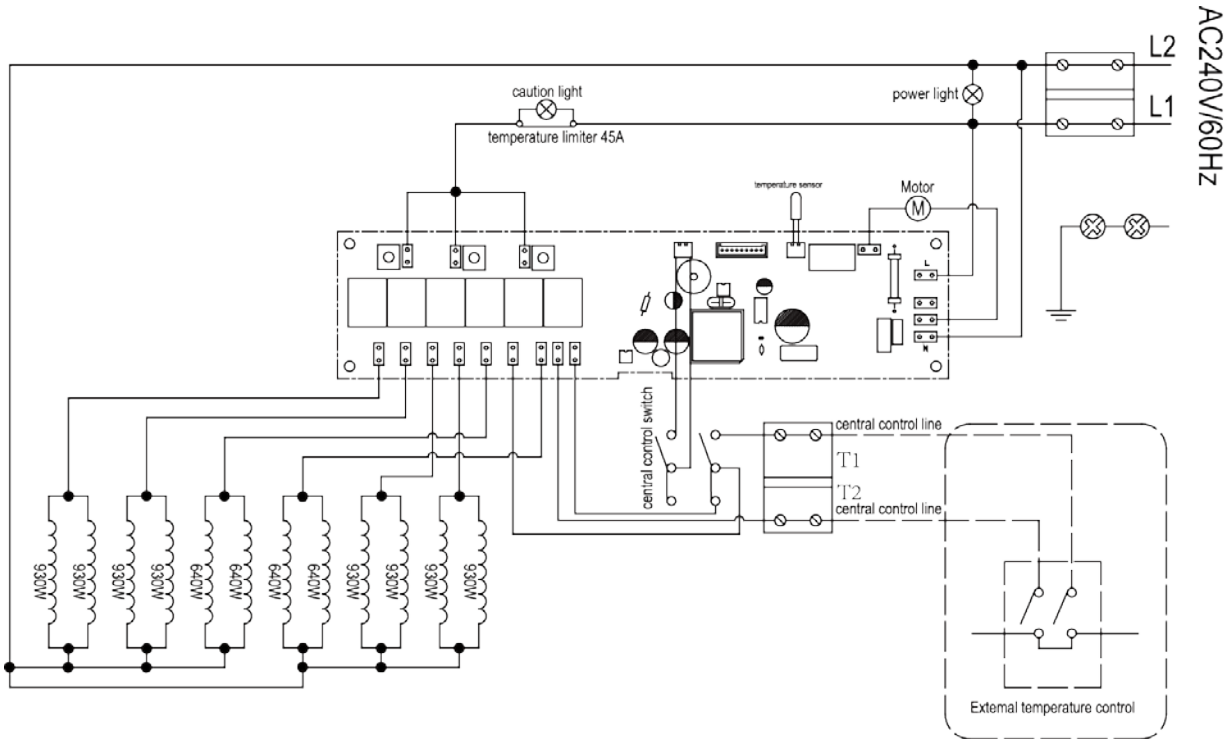

100E Circuit diagram Figure 3

Warning: This appliance must be grounded!.

Warning: The appliance must be connected to a 80(150E) or 55(100E)-Amp current protection circuit or device before being connected to power supply!.

GENERAL SAFETY INFORMATION

⚠WARNING : This heater requires a hardwire installation (no plug). The installation of this product must be carried out by a certified electrician and in accordance with all local and national electrical codes.

NOTE: This appliance is compatible with a 240V line voltage single pole wall thermostat (not included). This heater must be installed by a certified electrician.

⚠WARNING : Read and understand all installation and operation instructions prior to operating this unit. Observe all safety instructions at all times.

1. Use only copper wires rated for at least 60ºC.
2. Heater air flow must be directed parallel to or away from adjacent wall.
3. Observe wall, floor and ceiling clearance requirements.
4. All wiring must be done according to national and local electrical codes in the United States and Canada. The heater must be grounded as a precaution against possible electrical shock. Heater circuit must be protected with proper fuses.
5. The mounting structure and the anchoring hardware must be capable of supporting the weight of the heater and the mounting bracket (if used).
6. All electrical power must be disconnected and the main service box, which must be locked before connecting, inspecting, cleaning or servicing the heater. This is a precaution to prevent serious electric shock.
7. This heater is not suitable for use in hazardous locations as defined by the national fire protection association (NFPA) in the United States. This heater has hot and arcing sparking parts inside. Do not use it in areas where gasoline paint or flammable liquids are used or stored.
8. This heater is not suitable for use in corrosive atmospheres such as marine greenhouses or chemical storage areas.
9. This heater must be mounted at least 8 feet (2.44m) above the floor.

⚠WARNING Improper installation or failure to follow the procedures outlined in this instruction manual can result in serious electrical shock.

LOCATING THE HEATER

Install heater out of traffic areas, maintaining clearances stated in figure 4. The direction of air flow should not be restricted by columns or machinery and the air flow should wipe exposed walls rather than blowing directly on them. When more than one heater is used in an area, the heaters should be installed in a way that the air discharge of each heater supports the air flow of the others, to provide best circulation of warm air as indicated in figure 5.

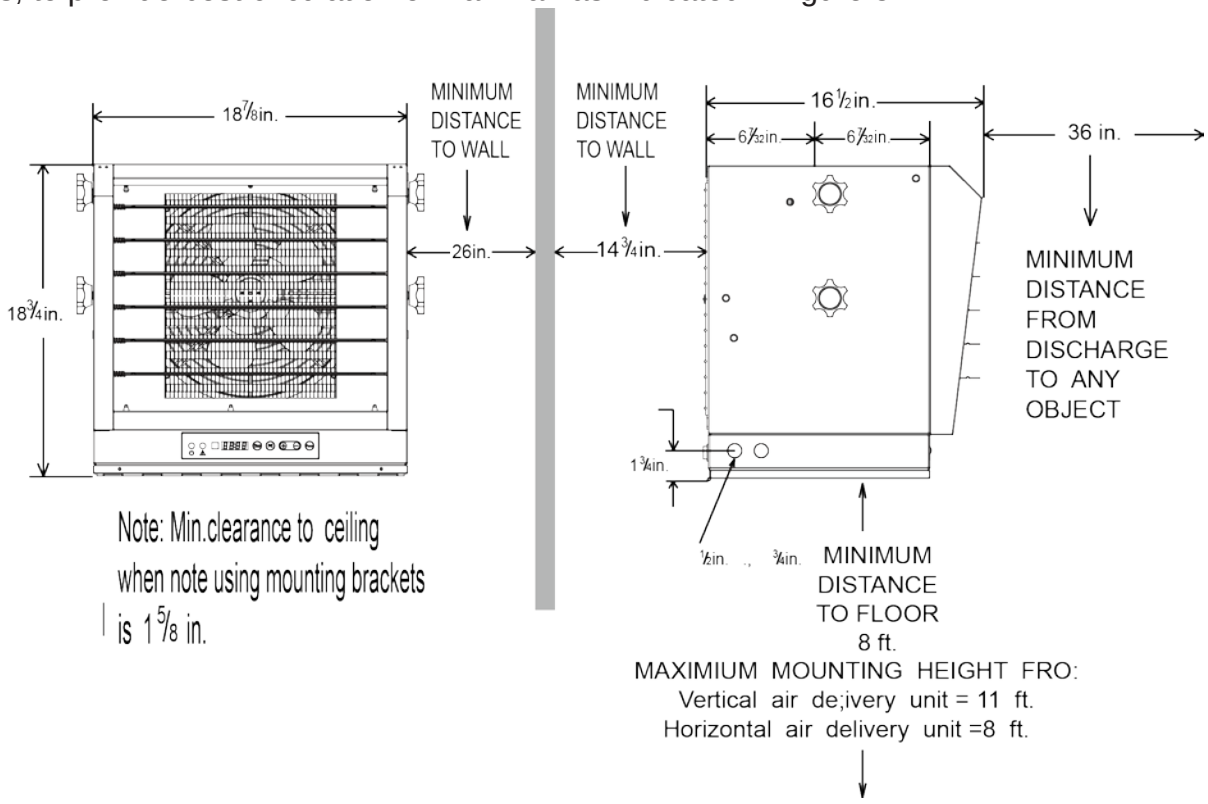

Figure 4

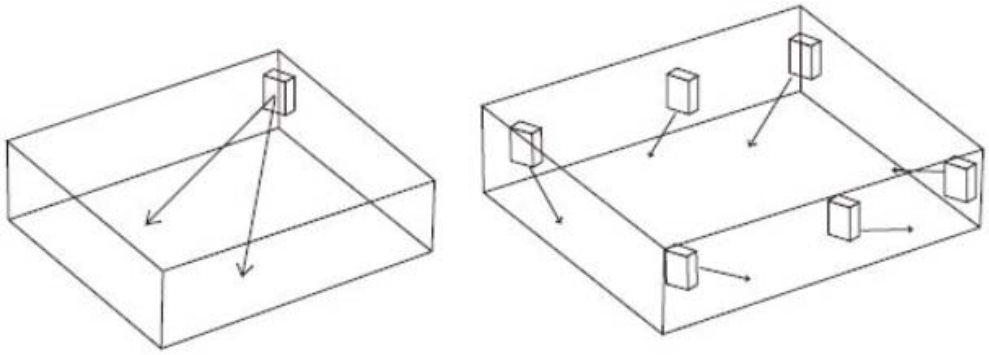

Figure 5

INSTALLATION

Hardware needed

You will also need the following hardware, which can be purchased from your local hardware store or electrical supply store:

- Electric wire in the adequate gauge and length for your application
- Proper size fuse or breaker for your heater's amperage
- Proper wire connectors for your application
- Fasteners appropriate for your application that are strong enough to hold the unit

Mounting the Bracket

Refer to Figures 6

1. Locate a wood stud in the wood ceiling joist. If you cannot locate a wood stud, you must install a wood piece on the ceiling as this heater must be securely fastened.
2. Remove the mounting bracket from the heating unit by loosening bracket screws with a wrench and slipping the handle off over the screw heads.
3. Place a washer on screws before inserting through the holes in the mounting bracket and screw them securely into a ceiling joist.

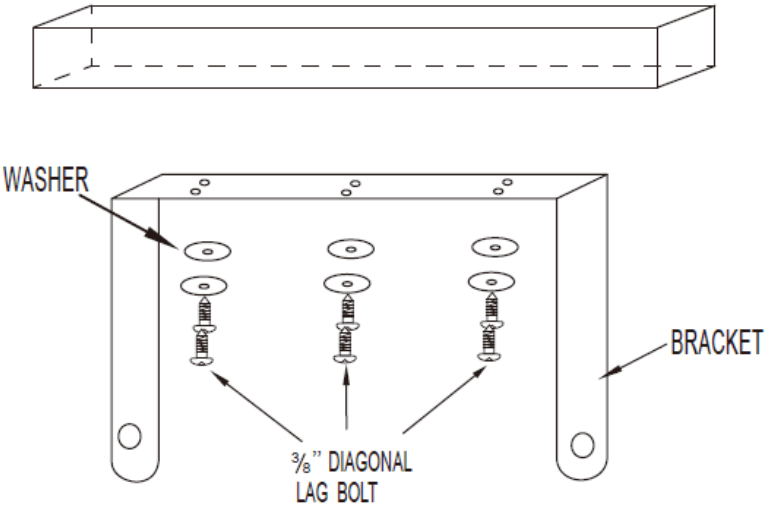

Figure 6 Six-Screw-Installation

HANGING THE HEATER

1) Lift the heater up and into the mounting bracket.
2) Align the bracket screws with the keyhole slots in the mounting bracket.
3) If the heater is to be tilted, it must be positioned in the keyhole slots - see figure 7.
4) Tighten the bracket screws with a wrench to secure the unit once suspended at horizontal or vertical level.

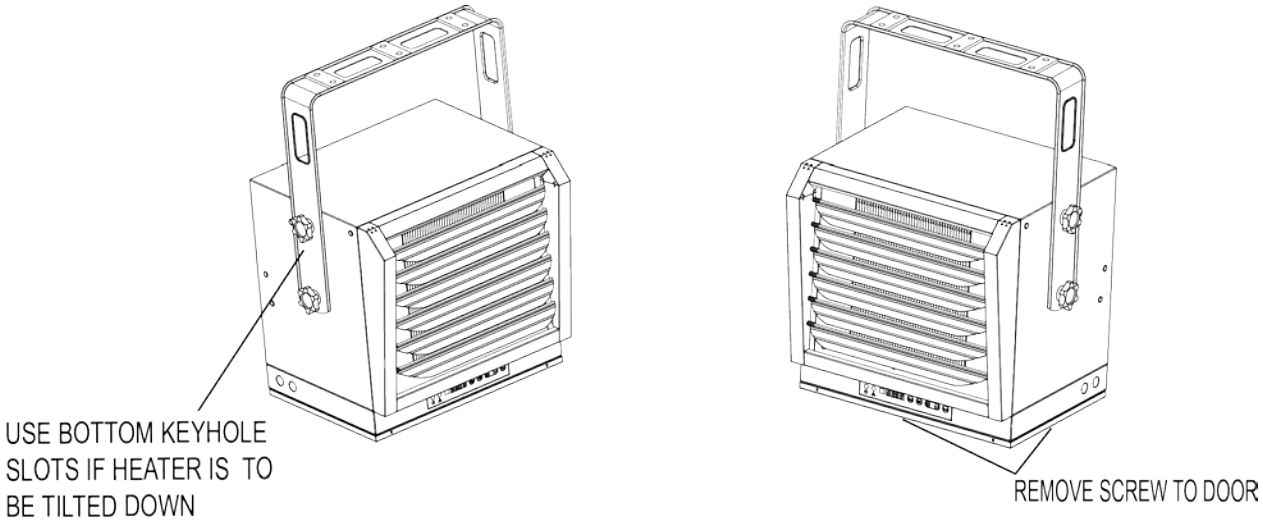

Figure 7

ADJUSTING AIR FLOW DIRECTION

1. To tilt the unit vertically, loosen the bracket screws (see figure 7) and see figure 8 to view multiple vertical angles.
2. Adjust louvers to the desired position.

NOTE: The louvers are designed so they cannot be completely closed. Do not attempt to defeat this feature; damage to the unit can result.

NOTE: To prevent possible overheating, please maintain adequate clearance as shown in figure 4.

MULTIPLE VERTICAL ANGLES

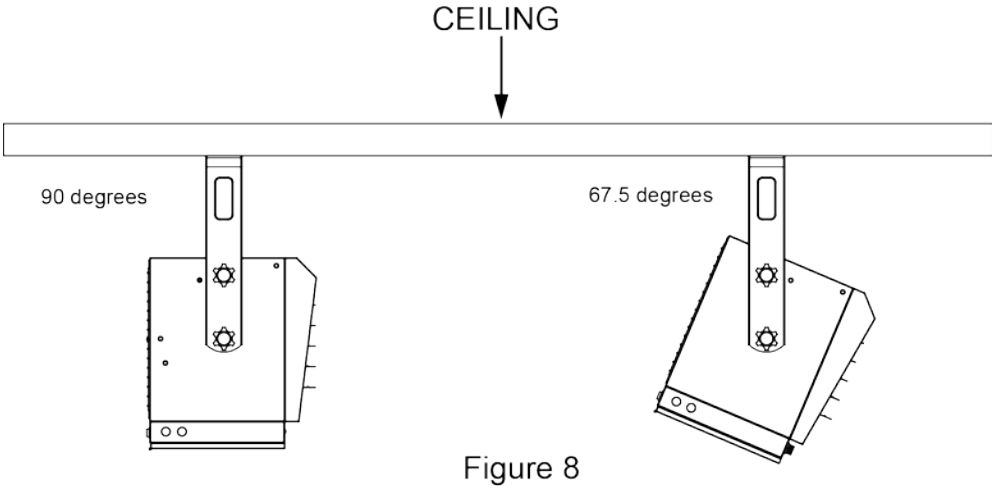

Figure 8

MOUNTING THE HEATER IN THE WALL'S WOOD STUDS ONLY

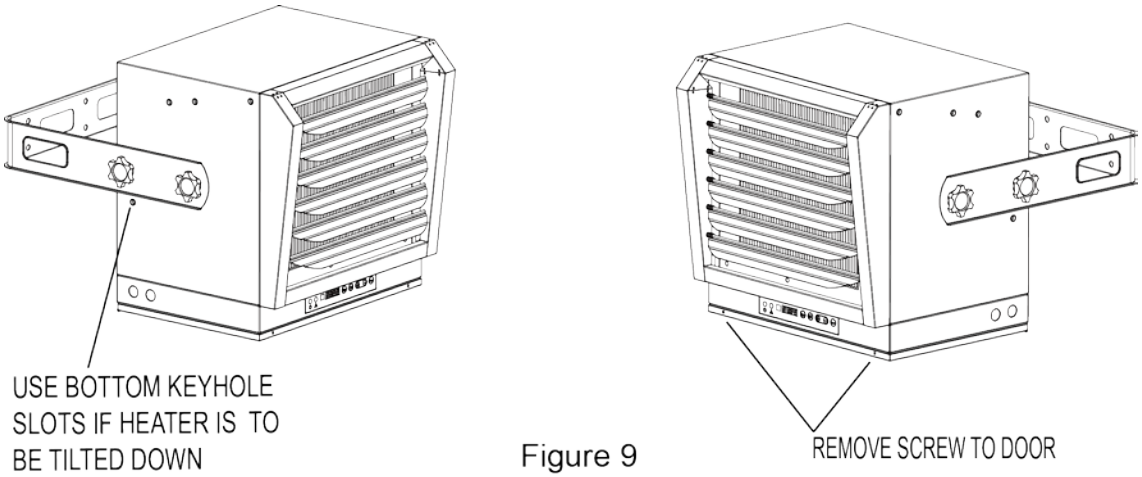

Figure 9

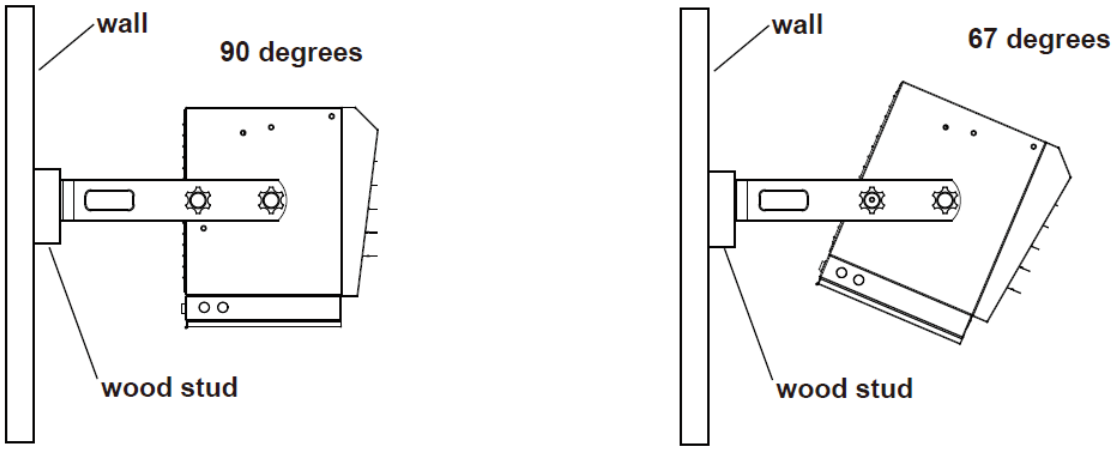

Figure 10

NOTE: Do not place any objects on the heater.

CONNECTING THE POWER

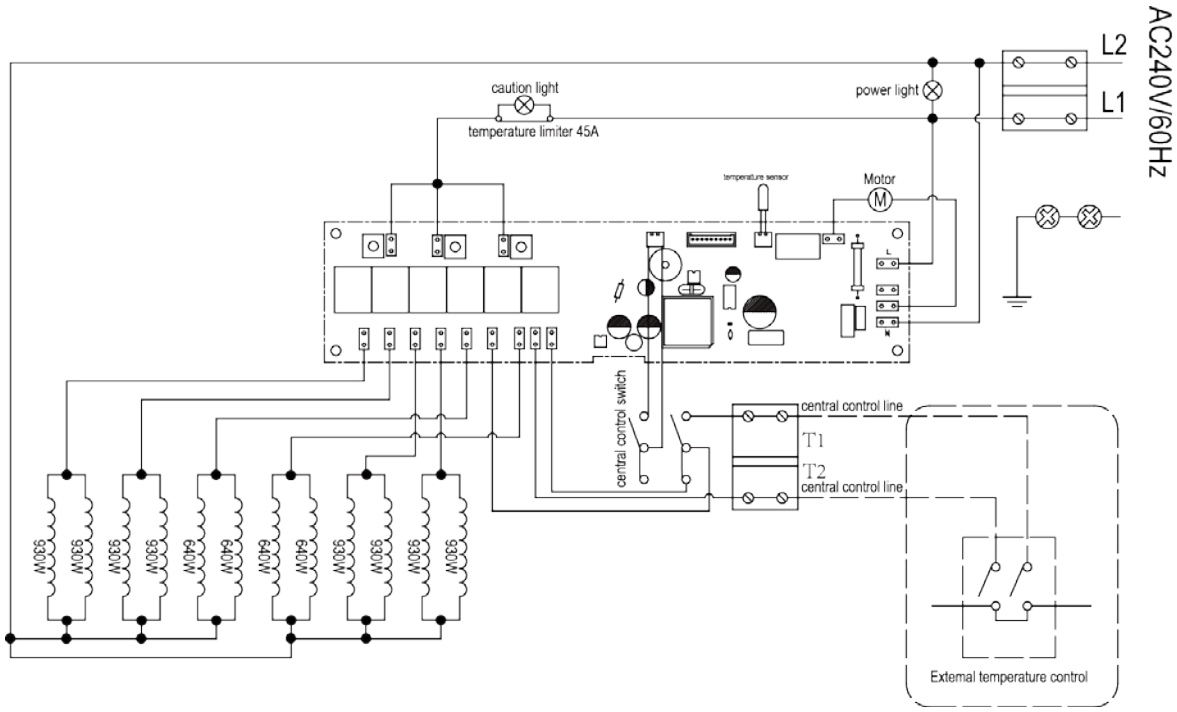

100E Figure 11

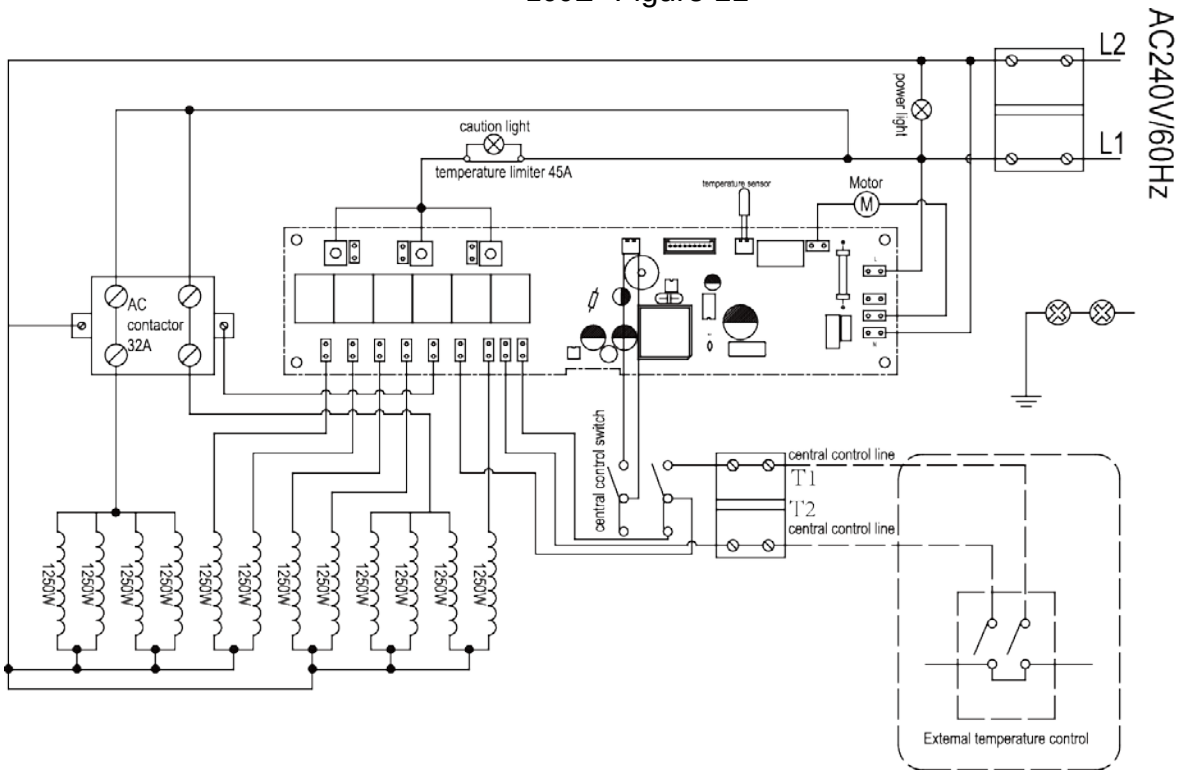

150E Figure 12

NOTE: If you use an external temperature control (external thermostat), please follow the instructions below:

Note 1: Turn off the power to the supply line for the heater before you select the build-in / external thermostat.
Note 2: Please find the rocker switch on the back of the heater as shown in Figure 13 and shift the switch to "II" position. Then the heater will be controlled by external thermostat.

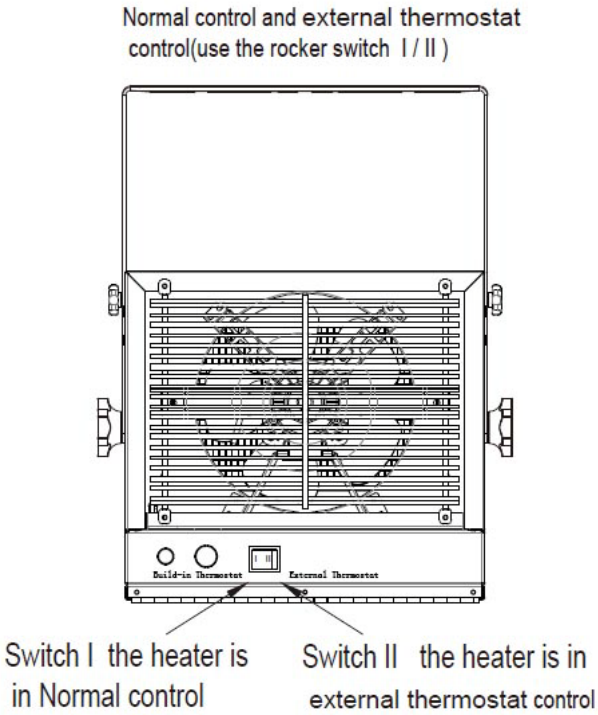

Figure 13

Note3. Connect the wire according to wiring diagram as shown in figure 11 (100E) or 12 (150E).

Note4. The external temperature control (external thermostat) should comply with UL or ETL standard requirements.

Note5. The lead wire of external temperature control (external thermostat) must have a minimum gauge of 16 AWG.

External thermostat installation:

1. Pop the piece out to open the hole

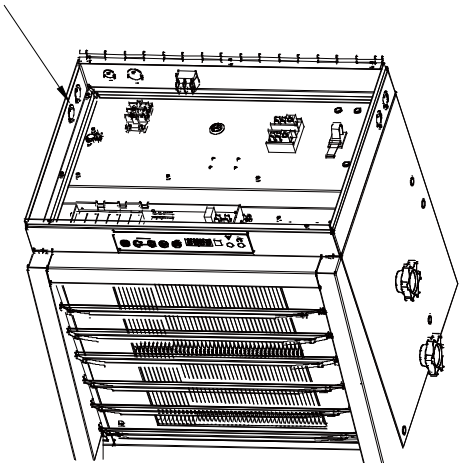

Figure 14A

2. Remove both screws

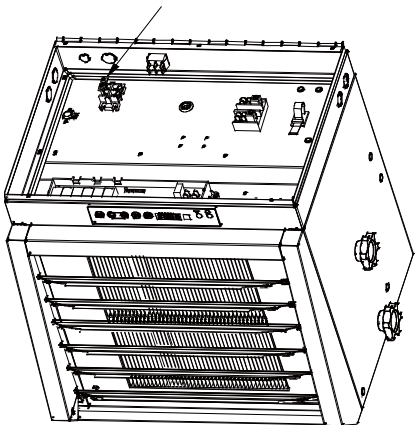

Figure 14B

3. Strip away the cover of lead wire for 50mm From the external control box.

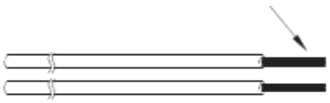

Figure 14C

4. .Twist the wire through the end

Figure 14D

5. Bend each wire into a circle

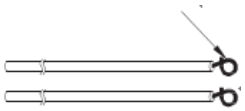

Figure 14E

6. Place the twisted wires through the hole

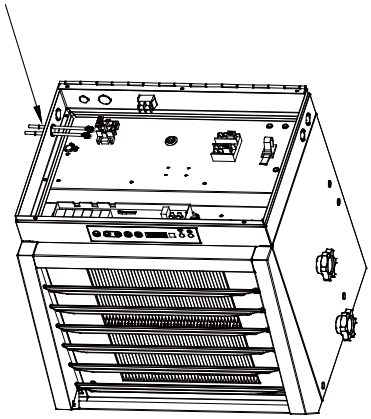

Figure 14F

7. Connect the wires to the heater and secure in place.

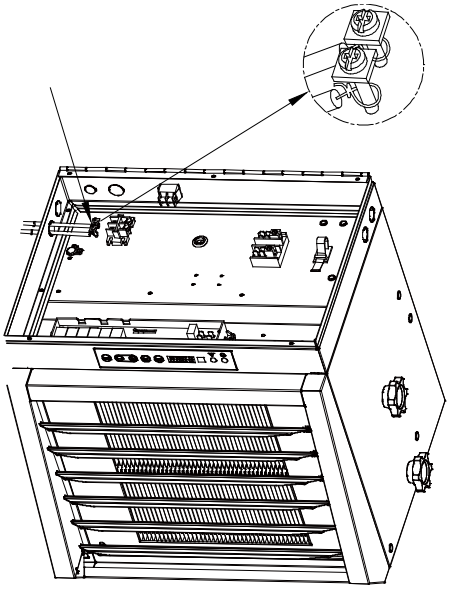

Figure 14G

8. Tighten back the screws with a screwdriver

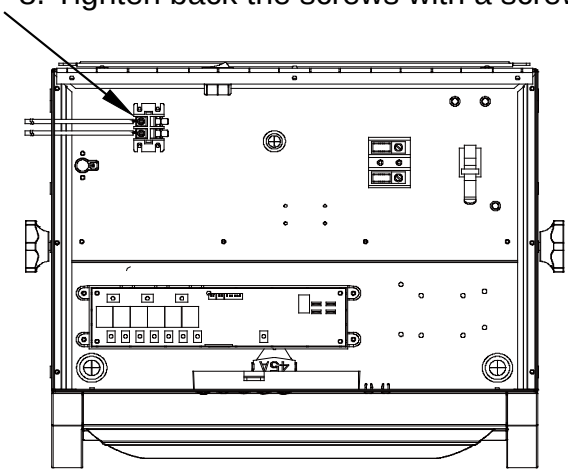

Figure 14H

Connection of power cables:

1. Remove the screw from the front of the unit to connect the power to the heater.
2. Attach the cable connectors to the unit (See Figure 15) and slide the 8 (100E) or 6 （150E）-gauge wire through the cable connector.
3. Connect the wire to the power block located in the base of the heater - See Figure 16
4. Turn on the power at the main service panel.

NOTE: All wiring must be carried out by a certified electrician and comply with national and local electrical codes in the Canada & United States. For certain applications, conduit may be required. Check local electrical codes. If you run the wiring in conduit and wish to be able to turn the heater, be sure to purchase enough flexible conduits to allow the heater to be turned.

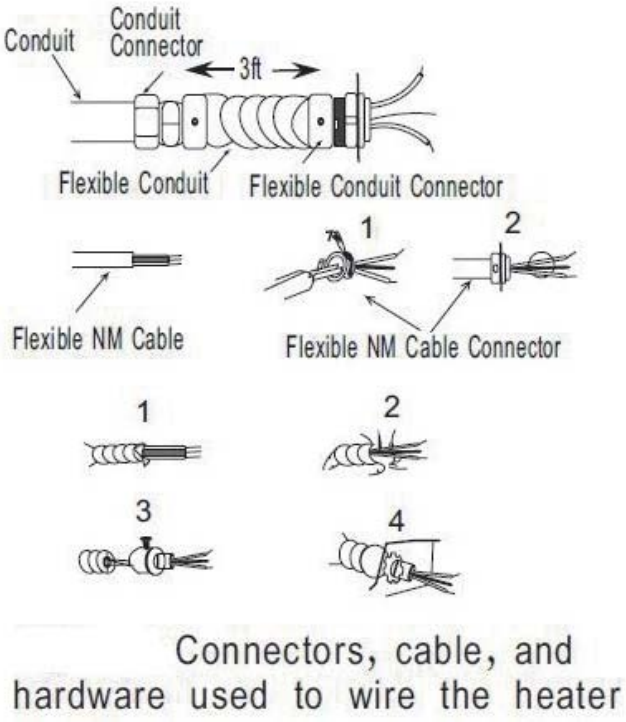

Figure 15

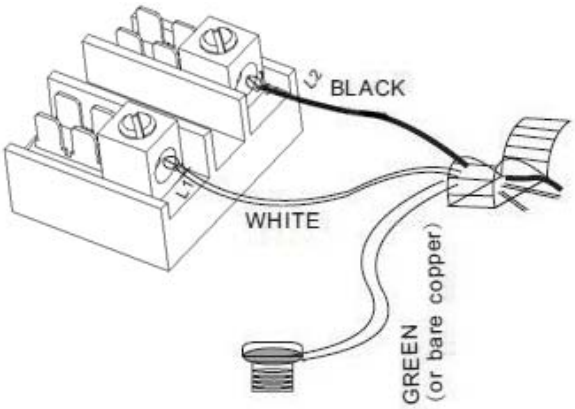

Figure 16

OPERATING INSTRUCTIONS

Note: After setting an external thermostat to control the heater, the power selection switch on the remote will be the only working function on the heater itself.

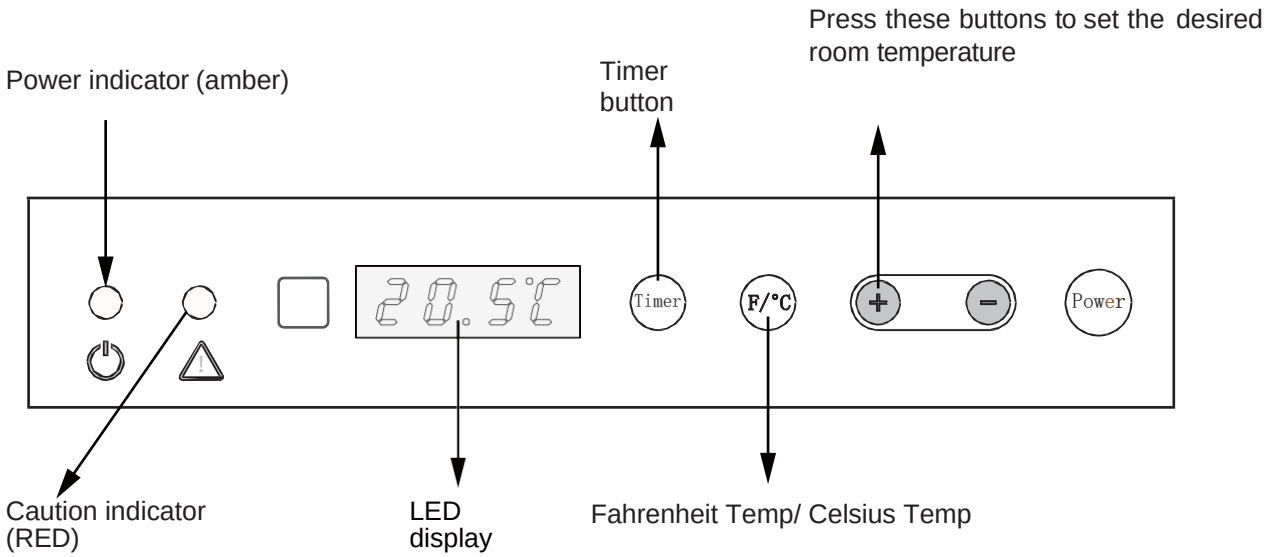

Control Panel

Figure 17

Instructions in Normal mode (temperature controlled by build-in thermostat)

*** Power button**

You can use the power button as the Power switch.
The power button is also used to change the heating output between low & high (L/H); the LED will display “L” or “H” accordingly

Model HA24-150E: Low (L) →10000W; High (H) →15000W
Model HA24-100E: Low (L) →7500W; High (H) →10000W

***Temperature selection**

Press the “F/℃” button to change the temperature displayed between Fahrenheit and Celsius.
Press the “+” or “-” button to set the desired temperature between 5 ℃ and 35 ℃.
Hold down the “+” or “-” button to speed up the selection process.

***Timer selection**

Use the “Timer” button to set the operating time of your heater, from 1 hour to 24 hours.
With each press of the “Timer” button, the timer will increase by 1 hour on the LED screen.

Remote control

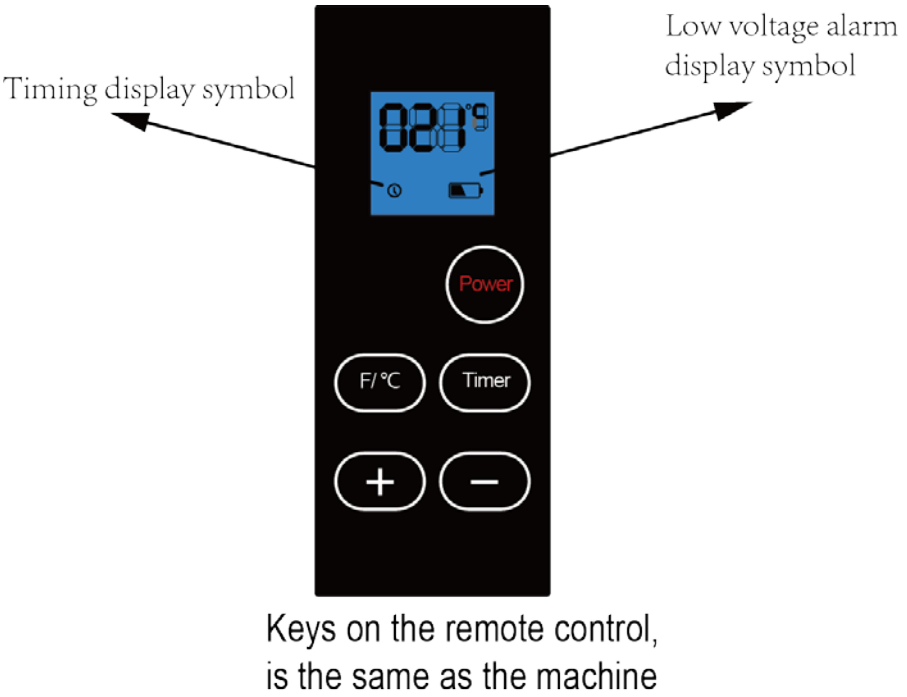

Figure 18

Once the room temperature reaches the set point, the heater will automatically stop running. The LED on the heater will flash for 5 seconds after any operation, and then the LED will displays the current room temperature.

***Sleep function of the remote control**

After 1 hour without any operation, the remote control will enter the sleep state with display turned off, press any key on it to exit the sleep state.

***Matching instruction of heater & remote control**

Matching: Turn off the heater, and then press the "Power" button on the heater for a while until the heater beeps twice (enter the match state), Then press any key on the remote control to finish the matching. The heater will beeps three times, the match is successful.

Release the matching: Hold the "−" button on the heater for a while when the heater is off, and the heater will makes a long beep, that indicates the exit of the Matching.

FCC STATEMENT

1. This device complies with Part 15 of the FCC Rules. Operation is subject to the following two
conditions:
(1) This device may not cause harmful interference.
(2) This device must accept any interference received, including interference that may cause undesired operation.
2. Changes or modifications not expressly approved by the party responsible for compliance could void the user's authority to operate the equipment.
NOTE: This equipment has been tested and found to comply with the limits for a Class B digital device, pursuant to Part 15 of the FCC Rules. These limits are designed to provide reasonable protection against harmful interference in a residential installation.
This equipment generates uses and can radiate radio frequency energy and, if not installed and used in accordance with the instructions, may cause harmful interference to radio communications.

However, there is no guarantee that interference will not occur in a particular installation. If this equipment does cause harmful interference to radio or television reception, which can be determined by turning the equipment off and on, the user is encouraged to try to correct the interference by one or more of the following measures:
Reorient or relocate the receiving antenna.
Increase the separation between the equipment and receiver.
Connect the equipment into an outlet on a circuit different from that to which the receiver is connected.
Consult the dealer or an experienced radio/TV technician for help.

TO PROTECT THE HEATING ELEMENT

The heater includes a fan delay function to prevent risk of overheating.
When turning the heater off, the unit will close the heating element first and then the fan will continue working for 90 seconds to dissipate residual heat.

THERMAL CUT-OUT

The heater will automatically turn off when parts of it overheat. When this happens, the red indicator will turn on. The heater will turn ON again and the red indicator will turn off when the unit cools down back to normal levels, but the reason of the overheating must be determined and corrective action taken before further operation.

THE HEATER MUST STOP WORKING
WHEN THE CAUTION INDICATOR IS GLOWING RED.

NOTE: When the thermal cut-out is activated, the caution indicator will turn red. In this case, immediately turn the heater OFF and inspect for any objects on or adjacent to the heater that may cause high temperatures. Let heater cool off completely before turning on again.

MAINTENANCE INSTRUCTIONS

1. Before cleaning, make sure the power has been turned off at the circuit breaker panel and the heating element of the heater is completely cool.
2. To maintain the appearance of the heater, it need only be wiped over occasionally with a dry duster. During the summer months, or at other times when the appliance is not in use and is completely cold, it can be cleaned by wiping it with a damp cloth. Do not let water drip inside the heater.
3. Do not use abrasive clearing powders or furniture polish to clean this appliance. Do not use chemical or abrasive products, metallic scourers and similar items; they may deteriorate the surface.
4. All servicing should be performed by qualified service personnel. Do not try to repair the heater yourself.