Professional

Wireless

Microphone system

USERS' MANUAL

VHF MICROPHONE SYSTEM

Thank you for purchasing our wireless microphones. We take pride in providing our custmers with the most advanced and highest quality karaoke products in the market. Please read this USER'S MANUAL before operation to ensure proper usage, and keep it for future refence. Enjoy!

Table of Contents

Table of Contents.....1
Included Accessories.....1
Receiver Front Panel/Rear Panel.....2
Transmitters/Function Descriptions.....3
Installation/Connection.....4
Troubleshooting.....5
Features & Specifications.....6

Parts checklist

Before installing your wireless microphone, Here are a few things you should do/know:

Receiver	1/4" male to male cable
Handheld microphone	AA battery
DC power adapter	User manual

*Be sure to keep original packaging in case of re-shipping is needed.

Matters Need Attention

1) Check to see whatever the local voltage accord with operating receiver voltage (Wrong selection may lead to burn out of receiver)
2) Do not dismantle the machine on your own. For internal repairing, please contact the local distributor or accepted service center.
3) When the machine will not be used for a long time, please disconnect the power plug from the receiver.
4) Do not recharge your batteries unless the batteries are rechargable.

Cleaning

Please make sure the power is disconnected before cleaning or repairing the machine. The machine can be cleaned by using a soft cloth with water. Dry the machine with a dry cloth and let it air dry for 15 minutes.
Please do not use volatile gasoline, diluents or other chemicals to clean the machine or the surface will be damaged.

Features and specifications

Features:

- Two high densitive microphones with LCD indicators
- Noise reduction technology
- Applicable for medium&small stages,karaoke halls and home entertainment etc.

Specifications:

– Receiver

- **Carrier Wave Frequency Range:** VHF 174-216MHz, 220-270MHz
- **Carrier Wave Stability:** 10PPM
- **Sensitivity:** -105dB @ sinad=12 dB
- **S/N Ratio:** >105dB
- **T.H.D.:** <0.5% @ 1KHz
- **Image Rejection: 85** dB typical
- **Spurious Rejection: 75** dB typical
- **Frequency Responses:** 50Hz~18KHz
- **Working Distance:** >200 feet
- **AF Output Impedance:**2.2KΩ
- **Max. Output Level:** Balance : 0-400mv, Unbalance : 0-200mv
- **Display:** LCD
- **Power Supply:** External DC Power Supply, 0.5A , 5V DC
- **Output Connector:** XLR Balanced Socket, Unbalance TRs⊙6.35mm Socket

–Transmitter

- **Transmitter Power:** 30mW
- **Spurious Emission:** <40dB(with carrier)
- **Display:** LCD
- **Battery Voltage:** 1.5V×2 pcs
- **Battery Life:** 6-8 hours

Troubleshooting

If you are having operating problems, or suspect something wrong with the unit, please check the troubleshooting list below to see if the issue is a result of incorrect operation rather than equipment malfunction.

Problem	Possible cause	Solution
Receiver No sound; No lights	• Power button is on the OFF position • DC power adater is not plug in • Poor connection of DC power adapter • How to switch from different channels?	• Turn on the power button • Plug in the DC power adapter • Check to see if the DC power adapter is loose. • See page 3 for details.
Microphone No sound; Lights on	• The transmitter is out of range • Microphone switch is off or mute • Microphone volume is turned down • Batteries in the microphone are not installed properly • The antenna is not fully functional. • Receiver is not connected to an amplifier, mixer or karaoke player	• Operate the machine in the effective range • Turn on the microphone switch (indicated green light) • Turn on the microphone volume of the receiver • Reinstall the batteries. Make sure the positive and negative end are install correctly • Try to change the angel of the antenna • Connect the ¼ to ¼ cable from the receiver to a microphone input (mixer, player, etc.). See Page 4 for detail
Distorted sound; feedback	• The two microphones are too close together • Batteries running low in microphone • Microphone volume is too high • Distortion from other electric wave	• Separate the microphone further away • Replace the batteries • Reduce the volume of the microphone • Move the receiver away from electric equipment
Batteries	• Batteries are bad or off power	• Replace the batteries.

Receiver Front Panel

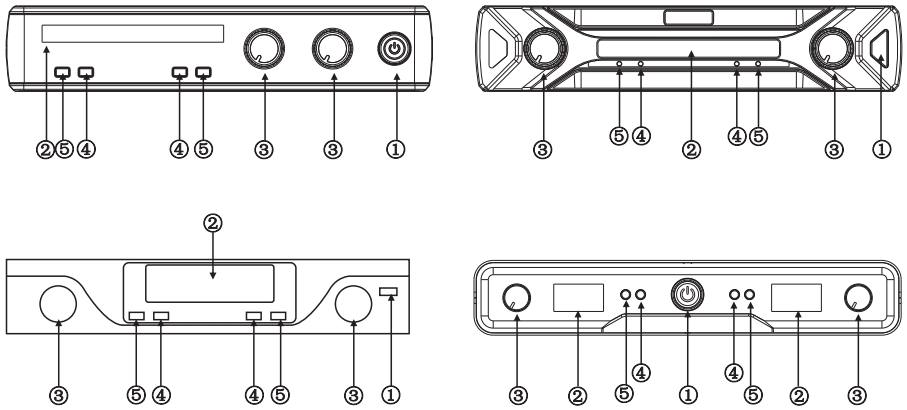

1. Power switch : turn on or turn off

2. Display panel :show all kinds or information (such group,signal,frequency and RF, AF etc)

3. Volume control

4. AF

5. RF

Receiver Rear Panel

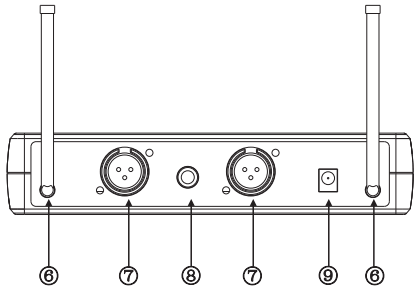

6. Antenna

7. Balance audio output

8. Mix out

9. DC input jack: 5V DC

Transmitters

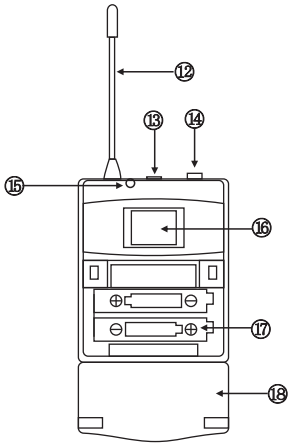

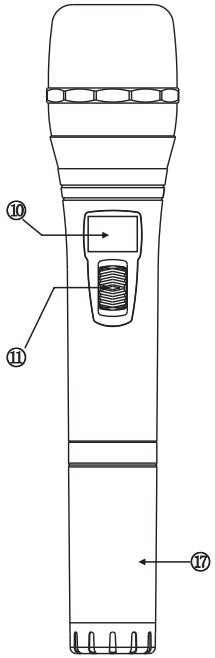

10. LCD screen
11. Power switch
12. Antenna
13. Power Switch: Press the button for 2-3 seconds to turn on, the LED lights. Press again for 2-3 seconds to turn off.
14. Audio Input Interface.
15. LED Indicator: Light when turn on. Flashes when low power.
16. LCD Display: Display for frequency information.
17. Battery Store.
18. Battery Cover.

Installation

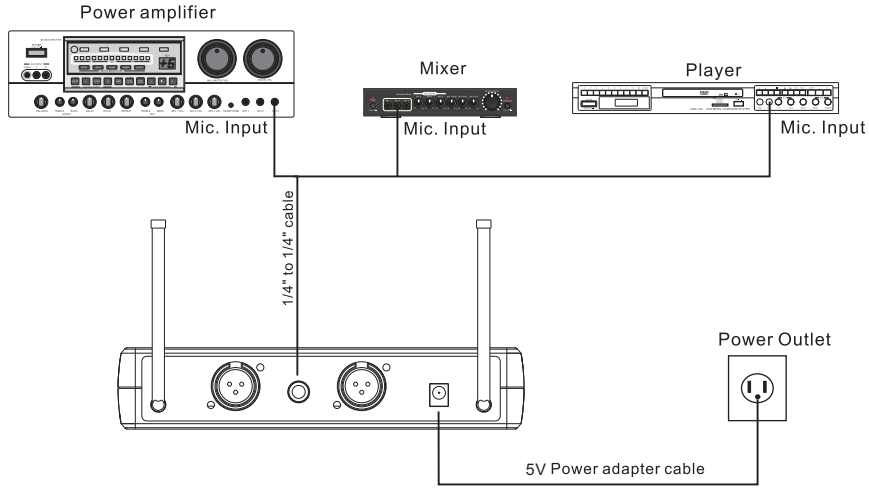

1) Contact with 5V 500mA DC adaptor.

2) Connect one end of a *1/4" TO 1/4" CABLE* to the receiver's *UNBALANCE AUDIO OUTPUT(MIX)* and the other end to a karaoke mixer, karaoke player or karaoke power amplifier 1/4" microphone input. If you are using the BALANCE AUDIO OUTPUT, use a *XLR to XLR cable* or *XLR to 1/4" cable*.

3) Unscrew the microphones handle cover(counter-clockwise) to check to see if there are batteries. If not, put the batteries into the microphones with the negative and positive end of the battery correspond the negative and positive end of the microphone. Screw the microphone handle back on.

Connected

1) The power supply is connected to the power input jack of the receiver. The input voltage of the power adapter must be consistent with the local power specifications.

2) XLR balanced output and 6.3mm unbalanced output jack on the rear panel of the receiver, based on the need to be connected.

FCC Statement:

This device complies with Part 15 of the FCC rules. Operation is subject to the following two conditions: 1) this device may not cause harmful interference, and 2)this device must accept any interference received, including interference that may cause undesired operation.
Note: This equipment has been tested and found to comply with the limits for a Class B digital device, pursuant to part 15 of the FCC Rules.
These limits are designed to provide reasonable protection against harmful interference in a residential installation. This equipment generates uses and can radiate radio frequency energy and, if not installed and used in accordance with the instructions, may cause harmful interference to radio communications. However, there is no guarantee that interference will not occur in particular installation. If this equipment does cause harmful interference to radio or television reception, which can be determined by turning the equipment off and on, the user is encouraged to try to correct the interference by one or more of the following measures:
--Reorient or relocate the receiving antenna.
--Increase the separation between the equipment and receiver.
--Connect the equipment into an outlet on a circuit different from that to which the receiver is connected.
--Consult the dealer or an experienced radio/TV technician for help.
Changes or modifications not expressly approved by the party responsible for compliance could void the user’s authority to operate the equipment.
FCC Radiation Exposure Statement
This device complies with FCC RF radiation exposure limits set forth for an uncontrolled environment. This transmitter must not be co-located or operating in conjunction with any other antenna or transmitter.