Latitude 7220

Rugged Extreme Tablet

www.dell.com/support

1

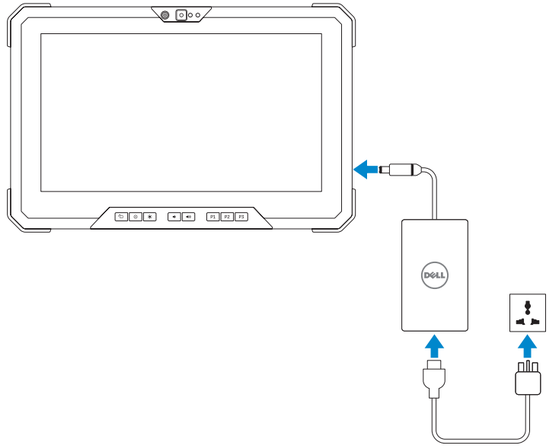

2

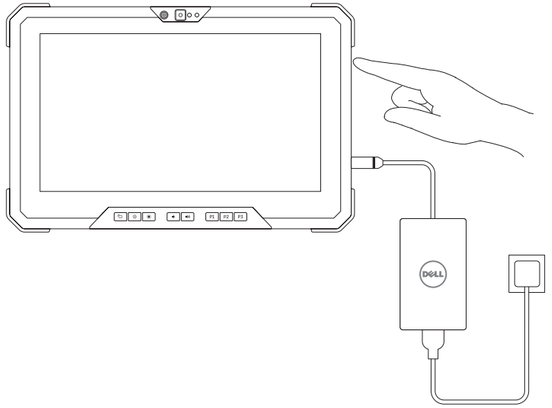

www.dell.com/regulatory_compliance

Regulatory model 管制型号 | 安規型號 認可モデル | 규정 모델	**T03H**
Regulatory type 管制类型 | 安規類型 認可タイプ | 규정 유형	**T03H003**

Latitude 7220 Rugged Extreme Tablet

Latitude 7220 Rugged Extreme Tablet 系列

This device complies with part 15 of the FCC Rules. Operation is subject to the following two conditions: (1) This device may not cause harmful interference, and (2) this device must accept any interference received, including interference that may cause undesired operation.

Información para NOM, o Norma Oficial Mexicana

La información que se proporciona a continuación se mostrará en los dispositivos que se describen en este documento, en conformidad con los requisitos de la Norma Oficial Mexicana (NOM):

Importador:
Dell México, S.A. de C.V
Av. Javier Barros Sierra, No 540, Piso 10
Col. Lomas de Santa Fe Delegación Álvaro Obregón
Ciudad de México, C.P. 01219
R.F.C: DME9204099R6

Modelo	T03H
Voltaje de alimentación	100 V ca–240 V ca
Frecuencia	50 Hz–60 Hz
Consumo de corriente de entrada	1,3 A
Voltaje de salida	19.5 V cc
Consumo de corriente de salida	2,31 A

Pour la France uniquement - **DAS Tronc : 0,98 W/kg**

Your computer is shipped with one of the following approved modules.

OMAN-TRA
D080001
TRA/TA-R/4582/17 TRA/TA-R/7494/19
D100428
TRA/TA-R/5917/18

EAC

© 2019-2020 Dell Inc. or its subsidiaries.

2020 - 09

03HDM5A02

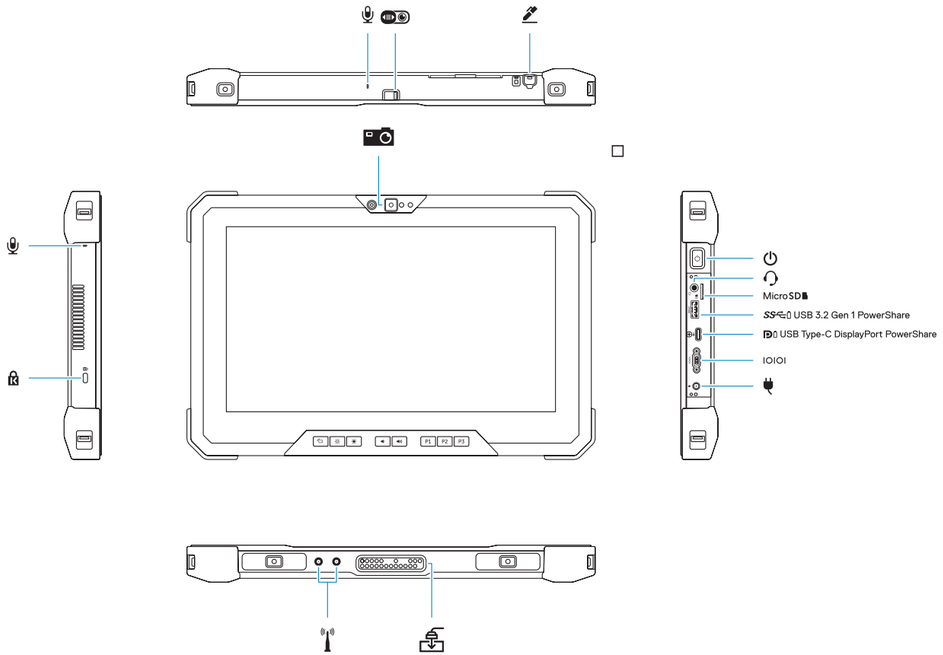

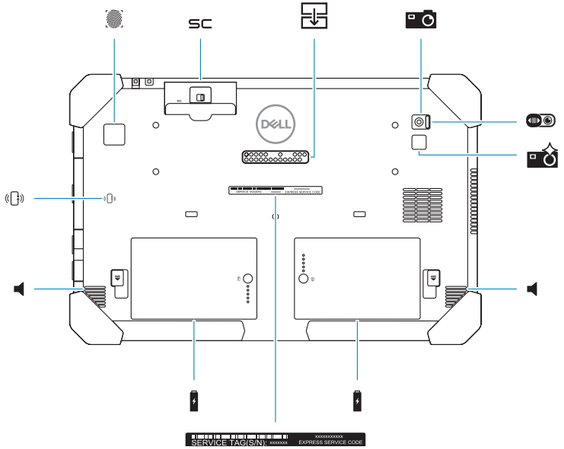

商品名稱：	平板電腦
型號：	Latitude 7220 Rugged Extreme Tablet (T03H)
額定電壓：	100 – 240 伏特
額定頻率：	50 – 60 赫茲
額定輸入電流：	1.3 安培
製造年份：	參考外箱標示或條碼標籤
製造號碼：	參考外箱條碼標籤
生產國別：	參考外箱標示
注意事項：	參考使用手冊
產品功能：	參考使用手冊
緊急處理方法：	參考使用手冊
進口商/委製商：	荷蘭商戴爾企業股份有限公司台灣分公司
進口商/委製商地址：	台北市敦化南路二段 218 號 20 樓
進口商/委製商電話：	00801-861-011

本產品符合臺灣RoHS標準CNS15663，請見
www.dell.com/learn/tw/zh/twcorp1/envt-info-materials

△ **CAUTION: This equipment is not suitable for use in locations where children are likely to be present.**

Este dispositivo está em conformidade com as diretrizes de exposição à radiofreqüência quando posicionado a pelo menos 1.5 centímetro de distância do corpo. Para maiores informações, consulte o site da ANATEL – **www.anatel.gov.br**

タブレット利用する際の注意

タブレットを利用する際は、画面側を体に密着させず、1.5cmほど離してお使いください。画面以外の側面に関しては、体に
密着させて使用することは可能です。

제품 사용시, 스크린을 사용자의 몸으로부터 최소 1.5cm 거리를 유지해 주시기 바랍니다.

用户提示:请通过官方途径进行操作系统升级,经由第三方升级将会存在安全隐患
预置应用软件：
请访问以下网址查看预置应用软件详细信息：
www.dell.com/xxxxxxxxxxxxxxxx

For Kingdom of Saudi Arabia Only - Communications and Information Technology Commission (CITC) electronic label may be located in **c:\Dell** folder of this platform.

بالنسبة للمملكة العربية السعودية فقط - يمكن وضع الملصق الإلكتروني لهيئة الاتصالات وتقنية المعلومات (CITC) في مجلد **c:\Dell** الخاص بهذا النظام الأساسي.

Connection and use of this communications equipment is permitted by the Nigerian Communications Commission

Federal Communication Commission Interference Statement

This device complies with Part 15 of the FCC Rules. Operation is subject to the following two conditions: (1) This device may not cause harmful interference, and (2) this device must accept any interference received, including interference that may cause undesired operation.

This equipment has been tested and found to comply with the limits for a Class B digital device, pursuant to Part 15 of the FCC Rules. These limits are designed to provide reasonable protection against harmful interference in a residential installation. This equipment generates, uses and can radiate radio frequency energy and, if not installed and used in accordance with the instructions, may cause harmful interference to radio communications. However, there is no guarantee that interference will not occur in a particular installation. If this equipment does cause harmful interference to radio or television reception, which can be determined by turning the equipment off and on, the user is encouraged to try to correct the interference by one of the following measures:

- Reorient or relocate the receiving antenna.
- Increase the separation between the equipment and receiver.
- Connect the equipment into an outlet on a circuit different from that to which the receiver is connected.
- Consult the dealer or an experienced radio/TV technician for help.

FCC Caution: Any changes or modifications not expressly approved by the party responsible for compliance could void the user's authority to operate this equipment.

This transmitter must not be co-located or operating in conjunction with any other antenna or transmitter.

Radiation Exposure Statement:
The product comply with the FCC portable RF exposure limit set forth for an uncontrolled environment and are safe for intended operation as described in this manual. The further RF exposure reduction can be achieved if the product can be kept as far as possible from the user body or set the device to lower output power if such function is available.

Industry Canada statement

This device complies with ISED's licence-exempt RSSs. Operation is subject to the following two conditions: (1) This device may not cause harmful interference, and (2) this device must accept any interference received, including interference that may cause undesired operation.
Le présent appareil est conforme aux CNR d' ISED applicables aux appareils radio exempts de licence. L'exploitation est autorisée aux deux conditions suivantes : (1) le dispositif ne doit pas

produire de brouillage préjudiciable, et (2) ce dispositif doit accepter tout brouillage reçu, y compris un brouillage susceptible de provoquer un fonctionnement indésirable.

Radiation Exposure Statement:
The product comply with the Canada portable RF exposure limit set forth for an uncontrolled environment and are safe for intended operation as described in this manual. The further RF exposure reduction can be achieved if the product can be kept as far as possible from the user body or set the device to lower output power if such function is available.

Déclaration d'exposition aux radiations:
Le produit est conforme aux limites d'exposition pour les appareils portables RF pour les Etats-Unis et le Canada établies pour un environnement non contrôlé.
Le produit est sûr pour un fonctionnement tel que décrit dans ce manuel. La réduction aux expositions RF peut être augmentée si l'appareil peut être conservé aussi loin que possible du corps de l'utilisateur ou que le dispositif est réglé sur la puissance de sortie la plus faible si une telle fonction est disponible.