RF Exposure Report

(Part 2: Test Under Dynamic Transmission Condition)

FCC ID	:	**2AQ68W696P**
Equipment	:	**5G WWAN Module**
Brand Name	:	**Foxconn**
Model Name	:	**T99W696**
Applicant	:	**Wistron Corporation 21F, No. 88, Sec. 1, Hsin Tai Wu Rd., Hsichih Dist, New Taipei City 221,Taiwan**
Standard	:	**FCC 47 CFR Part 2 (2.1093)**

Equipment： Foxconn T99W696 tested inside of Lenovo TP00158C Notebook Computer.

We, SPORTON INTERNATIONAL INC., would like to declare that the tested sample has been evaluated in accordance with the test procedures and has been in compliance with the applicable technical standards.

The test results in this report apply exclusively to the tested model / sample. Without written approval of SPORTON INTERNATIONAL INC. Laboratory, the test report shall not be reproduced except in full.

Approved by: Cona Huang / Deputy Manager

SPORTON INTERNATIONAL INC. Wensan Laboratory

Table of Contents

1. Introduction **4**
2. Tx Varying Transmission Test Cases and Test Proposal **5**
3. SAR Time Averaging Validation Test Procedures **8**
3.1 Test sequence determination for validation 8
3.2 Test configuration selection criteria for validating Smart Transmit feature 8
3.3 Test procedures for conducted power measurements 13
3.4 Test procedure for time-varying SAR measurements 25
4. Test Configurations **27**
4.1 WWAN (sub-6) transmission 27
5. Conducted Power Test Results for Sub-6 Smart Transmit Feature Validation **31**
5.1 Measurement setup 31
5.2 P_{limit} and P_{max} measurement results 35
5.3 Time-varying Tx power measurement results 36
5.4 Change in Call Test Results 43
5.5 Change in technology/band test results 44
5.6 Change in Time window / antenna switch test results 45
6. SAR Test Results for Sub-6 Smart Transmit Feature Validation **47**
6.1 Measurement setup 47
6.2 SAR measurement results for time-varying Tx power transmission scenario 48
7. Conclusions **60**

Appendix C. Plots of System Performance Check
Appendix D. DASY Calibration Certificate
Appendix E. Test Setup Photos

History of this test report

Report No.	Version	Description	Issued Date
FA621369C	01	Initial issue of report	Apr. 30, 2026

1. Introduction

The device it contains the Qualcomm modem supporting WWAN only, these modems are enabled with Qualcomm Smart Transmit feature to control and manage transmitting power in real time and to ensure at all times the time-averaged RF exposure is in compliance with the requirement.

This purpose of the Part 2 report is to demonstrate the EUT complies with FCC RF exposure requirement under Tx varying transmission scenarios, thereby validity of Qualcomm Smart Transmit feature for FCC equipment authorization. It serves to compliment the Part 0 and Part 1 Test Reports to justify compliance.

The P_{limit} used in this report is determined in Part 0 and Part 1 report. Refer to Part 1 SAR report, for product description and terminology used in this report.

Per Qualcomm's document, embedded file system (EFS) version 20 products are required to be verified for Smart Tx generation for relevant MCC settings. It was confirmed that this DUT contains embedded file system (EFS) version 20 configured for Qualcomm® Smart Transmit™ 4.0 for each wireless technologies settings for the US market.

Test Lab Information

Test Firm Name	Sporton International Inc.
Test Firm Information	No.58, Aly. 75, Ln. 564, Wenhua 3rd, Rd., Guishan Dist., Taoyuan City 333010, Taiwa TEL: +886-3-327-3456 FAX: +886-3-328-4978
Date of Start during the Test	04/15/2026
Date of End during the Test	04/20/2026
Test Engineers	Aaron Chen
Report Producer	Daisy Peng

2. Tx Varying Transmission Test Cases and Test Proposal

To validate time averaging feature and demonstrate the compliance in Tx varying transmission conditions, the following transmission scenarios are covered in Part 2 test:

1. During a time-varying Tx power transmission: To prove that the Smart Transmit feature accounts for Tx power variations in time accurately.
2. During a call disconnect and re-establish scenario: To prove that the Smart Transmit feature accounts for history of past Tx power transmissions accurately.
3. During technology/band handover: To prove that the Smart Transmit feature functions correctly during transitions in technology/band.
4. During DSI (Device State Index) change: To prove that the Smart Transmit feature functions correctly during transition from one device state (DSI) to another.
5. During antenna (or beam) switch: To prove that the Smart Transmit feature functions correctly during transitions in antenna (such as AsDiv scenario) or beams (different antenna array configurations).
6. During time window switch: To prove that the Smart Transmit feature correctly handles the transition from one time window to another specified by FCC, and maintains the normalized time-averaged RF exposure to be less than FCC limit of 1.0 at all times.
7. SAR exposure switching between two active radios (radio1 and radio2): To prove that the Smart Transmit feature functions correctly and ensures total RF exposure compliance when exposure varies among SAR_radio1 only, SAR_radio1 + SAR_radio2, and SAR_radio2 only scenarios.
8. System level compliance continuity:
    a. Within terrestrial networks (WWAN, WLAN, BT, RFID, etc.): To demonstrate the time averaged RF exposure compliance continuity during technology transition in both single-radio and multi-radio transmission scenarios and under both modes (i.e., ON and airplane) of WWAN modem while the USB is disconnected.

As described in Part 0 report, the RF exposure is proportional to the Tx power for a SAR - characterized wireless device. Thus, feature validation in Part 2 can be effectively performed through conducted and radiated power measurement. Therefore, the compliance demonstration under dynamic transmission conditions and feature validation are done in conducted/radiated power measurement setup for transmission scenario 1 through 8.

To add confidence in the feature validation, the time-averaged SAR measurements are also performed but only performed for transmission scenario 1 to avoid the complexity in SAR measurement (such as, for scenario 3 requiring change in SAR probe calibration file to accommodate different bands and/or tissue simulating liquid).

The strategy for testing in Tx varying transmission condition is outlined as follows:

- Demonstrate the total RF exposure averaged over FCC defined time windows does not exceed FCC's SAR limits, through time-averaged power measurements
  - Measure conducted Tx power (for *f* < 6GHz) versus time, and radiated Tx power (EIRP for *f* > 10GHz) versus time.
  - Convert it into RF exposure and divide by respective FCC limits to get normalized exposure versus time.
  - Perform running time-averaging over FCC defined time windows.
  - Demonstrate that the total normalized time-averaged RF exposure is less than 1 for all transmission scenarios at all times.

    Mathematical expression:

    - For sub-6 transmission only:

$$1g_or_10gSAR(t) = \frac{conducted_Tx_power(t)}{conducted_Tx_power_P_{limit}} * 1g_or_10gSAR_P_{limit} \quad (1a)$$

$$\frac{\frac{1}{T_{SAR}}\int_{t-T_{SAR}}^{t} 1g_or_10gSAR(t)dt}{FCC\ SAR\ limit} \leq 1$$
(1b)

where, $conducted_Tx_power(t)$, $conducted_Tx_power_P_{limit}$, and $1g_or_10gSAR_P_{limit}$ correspond to the measured instantaneous conducted Tx power, measured conducted Tx power at P_{limit}, and measured *1gSAR or 10gSAR* values at P_{limit} corresponding to sub-6 transmission.

- Demonstrate the total RF exposure averaged over FCC defined time windows does not exceed FCC's SAR limits, through time-averaged SAR measurements. Note as mentioned earlier, this measurement is performed for transmission scenario 1 only.
  - For sub-6 transmission only, measure instantaneous SAR versus time; for LTE+ sub6 NR transmission, request low power (or all-down bits) on LTE so that measured SAR predominantly corresponds to sub6 NR.
  - Convert it into RF exposure and divide by respective FCC limits to obtain normalized exposure versus time.
  - Perform time averaging over FCC defined time window.
  - Demonstrate that the total normalized time-averaged RF exposure is less than 1 for transmission scenario 1 at all times.

    Mathematical expression:

    - For sub-6 transmission only:

$$1g_or_10gSAR(t) = \frac{pointSAR(t)}{pointSAR_P_{limit}} * 1g_or_10gSAR(t)_P_{limit} \quad (3a)$$

$$\frac{\frac{1}{T_{SAR}}\int_{t-T_{SAR}}^{t} 1g_or_10gSAR(t)dt}{FCC\ SAR\ limit} \leq 1$$

(3b)

where, $pointSAR(t)$, $pointSAR_P_{limit}$, and $1g_or_10gSAR_P_{limit}$ correspond to the measured instantaneous point SAR, measured point SAR at P_{limit}, and measured *1gSAR* or 10gSAR values at P_{limit} corresponding to sub-6 transmission.

NOTE: cDASY6 measurement system by Schmid & Partner Engineering AG (SPEAG) of Zurich, Switzerland measures relative E-field, and provides ratio of $\frac{[\mathrm{pointE(t)}]^2}{[\mathrm{pointE_input.power.limit}]^2}$ versus time.

3. SAR Time Averaging Validation Test Procedures

This chapter provides the test plan and test procedure for validating Qualcomm Smart Transmit feature for sub-6 transmission. The 100 seconds time window for operating f < 3GHz is used as an example to detail the test procedures in this chapter.

3.1 Test sequence determination for validation

Following the FCC recommendation, two test sequences having time-variation in Tx power are predefined for sub-6 (f < 6 GHz) validation:

- Test sequence 1: request EUT's Tx power to be at maximum power, measured P_{max}†, for 80s, then requesting for half of the maximum power, i.e., measured $P_{max}/2$, for the rest of the time.
- Test sequence 2: request EUT's Tx power to vary with time. This sequence is generated relative to measured P_{max}, measured P_{limit} and calculated $P_{reserve}$ (= measured P_{limit} in dBm - *Reserve_power_margin* in dB) of EUT based on measured P_{limit}.

The details for generating these two test sequences is described and listed in Appendix A.

NOTE: For test sequence generation, "measured P_{limit}" and "measured P_{max}" are used instead of the "P_{limit}" specified in EFS entry and "P_{max}" specified for the device, because Smart Transmit feature operates against the actual power level of the "P_{limit}" that was calibrated for the EUT. The "measured P_{limit}" accurately reflects what the feature is referencing to, therefore, it should be used during feature validation testing. The RF tune up and device-to-device variation are already considered in Part 0 report prior to determining P_{limit}.

3.2 Test configuration selection criteria for validating Smart Transmit feature

For validating Smart Transmit feature, this section provides a general guidance to select test cases. In practice, an adjustment can be made in test case selection. The justification/clarification may be provided.

3.2.1 Test configuration selection for time-varying Tx power transmission

The Smart Transmit time averaging feature operation is independent of bands, modes, and channels for a given technology. Hence, validation of Smart Transmit in one band/mode/channel per technology is sufficient.

The criteria for the selection are based on the P_{limit} values determined in Part 0 report. Select the band in each supported technology that corresponds to the P_{limit} value that is less than P_{max} for validating Smart Transmit.

Note this test is designed for single radio transmission scenario. If UE supports sub6 NR in both non-standalone (NSA) and standalone (SA) modes, then validation in time-varying Tx power transmission scenario described in this section needs to be performed in SA mode. Otherwise, it needs to be performed in NSA mode with LTE anchor set to low power. The choice between SA and NSA mode needs to also take into account the seletion criteria described below. In general, one mode out of the two modes (NSA or SA) is sufficient for this test.

3.2.2 Test configuration selection for change in call

The criteria to select a test configuration for call-drop measurement is:

- Select technology/band with least P_{limit} among all supported technologies/bands, and select the radio configuration (e.g., # of RBs, channel#) in this technology/band that corresponds to the highest *measured* 1gSAR at P_{limit} listed in Part 1 report.
- In case of multiple bands having same least P_{limit}, then select the band having the highest *measured* 1gSAR at P_{limit} in Part 1 report.

This test is performed with the EUT's Tx power requested to be at maximum power, the above band selection will result in Tx power enforcement (i.e., EUT forced to have Tx power at $P_{reserve}$) for longest duration in one FCC defined time window. The call change (call drop/reestablish) is performed during the Tx power enforcement duration (i.e., during the time when EUT is forced to have Tx power at $P_{reserve}$). One test is sufficient as the feature operation is independent of technology and band.

3.2.3 Test configuration selection for change in technology/band

The selection criteria for this measurement is, for a given antenna, to have EUT switch from a technology/band with lowest P_{limit} within the technology group (in case of multiple bands having the same P_{limit}, then select the band with highest *measured* 1gSAR at P_{limit}) to a technology/band with highest P_{limit} within the technology group, in case of multiple bands having the same P_{limit}, then select the band with lowest *measured* 1gSAR at P_{limit} in Part 1 report, or vice versa.

This test is performed with the EUT's Tx power requested to be at maximum power, the technology/band switch is performed during Tx power enforcement duration (i.e., during the time when EUT is forced to have Tx power at $P_{reserve}$).

3.2.4 Test configuration selection for change in DSI

The criteria to select a test configuration for DSI change test is

- Select a technology/band having the $P_{limit} < P_{max}$ within any technology and DSI group, and for the same technology/band having a different P_{limit} in any other DSI group. Note that the selected DSI transition need to be supported by the device.

This test is performed with the EUT's Tx power requested to be at maximum power in selected technology/band, and DSI change is conducted during Tx power enforcement duration (i.e., during the time when EUT is forced to have Tx power at $P_{reserve}$).

3.2.5 Test configuration selection for SAR exposure switching

If supported, the test configuration for SAR exposure switching should cover

1. SAR exposure switch when two active radios are in the same time window
2. SAR exposure switch when two active radios are in different time windows. One test with two active radios in any two different time windows is sufficient as Smart Transmit operation is the same for RF exposure switch in any combination of two different time windows.

The Smart Transmit time averaging operation is independent of the source of SAR exposure (for example, LTE vs. Sub6 NR) and ensures total time-averaged RF exposure compliance. Hence, validation of Smart Transmit in any one simultaneous SAR transmission scenario (i.e., one combination for LTE + Sub6 NR transmission) is sufficient, where the SAR exposure varies among SAR_{radio1} only, SAR_{radio1} + SAR_{radio2}, and SAR_{radio2} only scenarios.

The criteria to select a test configuration for validating Smart Transmit feature during SAR exposure switching scenarios is

- Select any two < 6GHz technologies/bands that the EUT supports simultaneous transmission (for example, LTE+ Sub6 NR).
- Among all supported simultaneous transmission configurations, the selection order is
  1. select one configuration where both P_{limit} of radio1 and radio2 is less than their corresponding P_{max}, preferably, with different P_{limits}. If this configuration is not available, then,
  2. select one configuration that has P_{limit} less than its P_{max} for at least one radio. If this can not be found, then,
  3. select one configuration that has P_{limit} of radio1 and radio2 greater than P_{max} but with least ($P_{limit} – P_{max}$) delta.

SAR exposure switch validation with one simultaneous transmission scenario (i.e., either FR1 NSA or LTE inter-band ULCA) is sufficient as Smart Transmit operation is the same.

3.2.6 Test configuration selection for change in time window

FCC specifies different time window for time averaging based on operation frequency. The criteria to select a test configuration for validating Smart Transmit feature and demonstrating the compliance during the change in time window is

- Select any technology/band that has operation frequency classified in one time window defined by FCC (such as 100-seconds time window), and its corresponding P_{limit} is less than P_{max} if possible.
- Select the 2nd technology/band that has operation frequency classified in a different time window defined by FCC (such as 60-seconds time window), and its corresponding P_{limit} is less than P_{max} if possible.
- It is preferred both P_{limit} values of two selected technology/band less than corresponding P_{max}, but if not possible, at least one of technologies/bands has its P_{limit} less than P_{max}.

This test is performed with the EUT's Tx power requested to be at maximum power in selected technology/band. Test for one pair of time windows selected is sufficient as the feature operation is the same.

3.2.7 Test configuration selection for system level compliance continuity

3.2.7.1 Selection criteria for WWAN, WLAN, BT system level test

The purpose of system level compliance test is to demonstrate the time-averaged RF exposure compliance continuity in the following scenarios while the USB is disconnected:

1. Across technology switch
2. During transition from single technology to multi-technology
3. In transition when WWAN went from ON to airplane mode
4. Active WLAN radio and/or Bluetooth (BT) radio with WWAN in airplane mode
5. Time window transition when WWAN in airplane mode
6. In transition when WWAN went from airplane mode to ON.

Note: Technology in this section refers to WWAN, WLAN or BT

The selection criteria for radios to be tested is to select a radio which has the largest *Pmax*/*Plimit* ratio among all configurations supported (including SISO, MIMO, DBS, SISO+MIMO or DBS+MIMO whichever appropriate) within each technology and within the same antenna group.

3.2.8 Test configuration selection for Antenna Switch Across AGs with Simultaneous Transmission on Shared Antenna

If Smart Transmit is configured to operate in GEN2 mode (GEN2_SUB6) and if there are any 'shared antennas' across antenna groups (AGs), then antenna switch test should be performed with antenna switching across AGs while simultaneously transmitting on second radio on shared antenna common to those AGs.

Test case description: At a high-level, test is performed in two radio simultaneous transmission scenario, i.e., radio1 + radio2, where, radio1 is switching antenna from one AG to another AG, while radio2 is transmitting continuously on shared antenna between those two AGs.
Below are different Smart Transmit EFS configurations where RF exposure is shared for an antenna across GEN2 antenna/module groups:

- GEN2_SUB6 mode (sub6-only device): EFS configured to operate in two or more sub6 AGs, where at least one sub6-antenna is configured as 'shared antenna' in two or more AGs. Test case is described above.

NOTE: If this shared antenna switch test is performed, which is also verifying correct *Plimit* is being applied when switching antennas, in that case, there is no need to perform antenna switch test described in Sections 3.2.3 & 3.3.4.

The purpose of the test is to demonstrate that Smart Transmit ensures time-averaged RF exposure compliance for each antenna group when the device is switching antennas across AGs on one radio while the other radio has RF exposure contribution to both AGs/MGs due to transmission on shared antenna. As an example, radio1 switches from 'AG0' to 'AG1' during the test, while radio2 on shared antenna is contributing exposure to both AG0 and AG1. Therefore, the validation criteria is that the total normalized time-averaged exposure versus time meets at all times for both antenna groups:

1. Prior to the switch (radio1 in AG0, and radio2 in both AG0 and AG1):
   normalized time-averaged exposure of (radio1 + radio2) in AG0 ≤ 1.0

normalized time averaged exposure of radio2 in AG1 ≤ 1.0

2. After the switch (radio1 in AG1, and radio2 in both AG0 and AG1):

normalized total time-averaged exposure of radio2 in AG0 ≤ 1.0

normalized total time-averaged exposure of (radio1 + radio2) in AG1 ≤ 1.0

The criteria to select a test configuration for simultaneous transmission scenario with both radios requesting to transmit at maximum power where first radio's transmitting antenna is switched from one AG to another while the second radio is transmitting continuously on shared antenna between those two AGs is:

- Radio1 + radio2 is a supported transmission scenario with both radios under Smart Transmit control, where the selected tech/band for radio1 is supported in two antennas across AGs, and selected tech/band for radio2 is supported for transmission on shared antenna between the two AGs/MGs of radio1.
- Radio1 can also switch tech/band when switching antennas across AGs.
- All selected radio configurations (tech/band/antenna/DSI) of radio1 and radio2 should have *Plimit* < *Pmax* by at least 2dB if possible. Otherwise, select the radio configuration having the largest (*Pmax* – *Plimit*) value.

3.3 Test procedures for conducted power measurements

This section provides general conducted power measurement procedures to perform compliance test under dynamic transmission scenarios described in Section 2. In practice, an adjustment can be made in these procedures. The justification/clarification may be provided.

3.3.1 Time-varying Tx power transmission scenario

This test is performed with the two pre-defined test sequences described in Section 3.1 for all the technologies and bands selected in Section 3.2.1. The purpose of the test is to demonstrate the effectiveness of power limiting enforcement and that the time-averaged SAR (corresponding time-averaged Tx power) does not exceed the FCC limit at all times (see Eq. (1a) and (1b)).

Test procedure

1. Measure P_{max}, measure P_{limit} and calculate $P_{reserve}$ (= measured P_{limit} in dBm – *Reserve_power_margin* in dB) and follow Section 3.1 to generate the test sequences for all the technologies and bands selected in Section 3.2.1. Both test sequence 1 and test sequence 2 are created based on measured P_{max} and measured P_{limit} of the EUT. Test condition to measure P_{max} and P_{limit} is:
   - □ Measure P_{max} with Smart Transmit disabled and callbox set to request maximum power.
   - □ Measure P_{limit} with Smart Transmit enabled and *Reserve_power_margin* set to 0 dB, callbox set to request maximum power.
2. Set *Reserve_power_margin* to actual (intended) value (3dB for this EUT based on Part 1 report) and reset power on EUT to enable Smart Transmit, establish radio link in desired radio configuration, with callbox requesting the EUT's Tx power to be at pre-defined test sequence 1, measure and record Tx power versus time, and then convert the conducted Tx power into 1gSAR or 10gSAR value (see Eq. (1a)) using measured P_{limit} from above Step 1. Perform running time average to determine time-averaged power and 1gSAR or 10gSAR versus time as illustrated in Figure 3-1 where using 100-seconds time window as an example.

NOTE: In Eq.(1a), instantaneous Tx power is converted into instantaneous 1gSAR or 10gSAR value by applying the measured worst-case 1gSAR or 10gSAR value at P_{limit} for the corresponding technology/band/antenna/DSI reported in Part 1 report.

NOTE: For an easier computation of the running time average, 0 dBm can be added at the beginning of the test sequences the length of the responding time window, for example, add 0dBm for 100-seconds so the running time average can be directly performed starting with the first 100-seconds data using excel spreadsheet. This technique applies to all tests performed in this Part 2 report for easier time-averaged computation using excel spreadsheet.

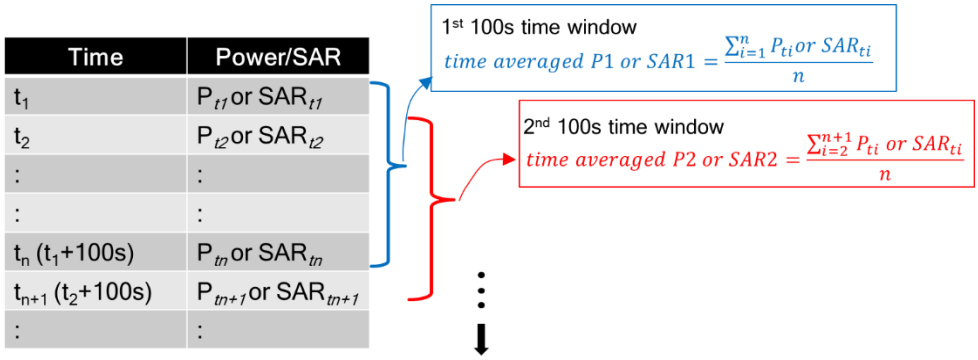

Figure 3-1 100s running average illustration

3. Make one plot containing:
   a. Instantaneous Tx power versus time measured in Step 2,
   b. Requested Tx power used in Step 2 (test sequence 1),
   c. Computed time-averaged power versus time determined in Step 2,
   d. Time-averaged power limit (corresponding to FCC SAR limit of 1.6 W/kg for 1gSAR or 4.0W/kg for 10gSAR) given by

   $$Time\ avearged\ power\ limit = meas.P_{limit} + 10 \times \log(\frac{FCC\ SAR\ limit}{meas.SAR_Plimit}) \quad (5a)$$

   where $meas.P_{limit}$ and $meas.SAR_Plimit$ correspond to measured power at P_{limit} and measured SAR at P_{limit}.
4. Make another plot containing:
   a. Computed time-averaged 1gSAR or 10gSAR versus time determined in Step 2
   b. FCC $1gSAR_{limit}$ of 1.6W/kg or FCC $10gSAR_{limit}$ of 4.0W/kg.
5. Repeat Steps 2 ~ 4 for pre-defined test sequence 2 and replace the requested Tx power (test sequence 1) in Step 2 with test sequence 2.
6. Repeat Steps 2 ~ 5 for all the selected technologies and bands.

The validation criteria are, at all times, the time-averaged power versus time shown in Step 3 plot shall not exceed the time-averaged power limit (defined in Eq. (5a)), in turn, the time-averaged 1gSAR or 10gSAR versus time shown in Step 4 plot shall not exceed the FCC limit of 1.6 W/kg for 1gSAR or 4.0 W/kg for 10gSAR (i.e., Eq. (1b)).

3.3.2 Change in call scenario

This test is to demonstrate that Smart Transmit feature accurately accounts for the past Tx powers during time-averaging when a new call is established.

The call disconnect and re-establishment needs to be performed during power limit enforcement, i.e., when the EUT's Tx power is at $P_{reserve}$ level, to demonstrate the continuity of RF exposure management and limiting in call change scenario. In other words, the RF exposure averaged over any FCC defined time window (including the time windows containing the call change) doesn't exceed FCC limit of 1.6 W/kg for 1gSAR or 4.0 W/kg for 10gSAR.

Test procedure

1. Measure P_{limit} for the technology/band selected in Section 3.2.2. Measure P_{limit} with Smart Transmit enabled and *Reserve_power_margin* set to 0 dB, callbox set to request maximum power.
2. Set *Reserve_power_margin* to actual (intended) value and reset power on EUT to enable Smart Transmit.
3. Establish radio link with callbox in the selected technology/band.
4. Request EUT's Tx power at 0 dBm for at least one time window specified for the selected technology/band, followed by requesting EUT's Tx power to be at maximum power for about ~60 seconds, and then drop the call for ~10 seconds. Afterwards, re-establish another call in the same radio configuration (i.e., same technology/band/channel) and continue callbox requesting EUT's Tx power to be at maximum power for the remaining time of at least another full duration of the specified time window. Measure and record Tx power versus time. Once the measurement is done, extract instantaneous Tx power versus time, convert the measured conducted Tx power into 1gSAR or 10gSAR value using Eq. (1a), and then perform the running time average to determine time-averaged power and 1gSAR or 10gSAR versus time.

   NOTE: In Eq.(1a), instantaneous Tx power is converted into instantaneous 1gSAR or 10gSAR value by applying the measured worst-case 1gSAR or 10gSAR value at P_{limit} for the corresponding technology/band/antenna/DSI reported in Part 1 report.

5. Make one plot containing: (a) instantaneous Tx power versus time, (b) requested power, (c) computed time-averaged power, (d) time-averaged power limit calculated using Eq.(5a).
6. Make another plot containing: (a) computed time-averaged 1gSAR or 10gSAR versus time, and (b) FCC limit of 1.6 W/kg for 1gSAR or 4.0 W/kg for 10gSAR.

The validation criteria are, at all times, the time-averaged power versus time shall not exceed the time-averaged power limit (defined in Eq.(5a)), in turn, the time-averaged 1gSAR or 10gSAR versus time shall not exceed the FCC limit of 1.6 W/kg for 1gSAR or 4.0 W/kg for 10gSAR (i.e., Eq. (1b)).

3.3.3 Change in technology and band

This test is to demonstrate the correct power control by Smart Transmit during technology switches and/or band handovers.

Similar to the change in call test in Section 3.3.2, to validate the continuity of RF exposure limiting during the transition, the technology and band handover needs to be performed when EUT's Tx power is at $P_{reserve}$ level (i.e., during Tx power enforcement) to make sure that the EUT's Tx power from previous $P_{reserve}$ level to the new $P_{reserve}$ level (corresponding to new technology/band). Since the P_{limit} could vary with technology and band, Eq. (1a) can be written as follows to convert the instantaneous Tx power in 1gSAR or 10gSAR exposure for the two given radios, respectively:

$$1g_or_10gSAR_1(t) = \frac{conducted_Tx_power_1(t)}{conducted_Tx_power_P_{limit_1}} * 1g_or_10gSAR_P_{limit_1} \quad (6a)$$

$$1g_or_10gSAR_2(t) = \frac{conducted_Tx_power_2(t)}{conducted_Tx_power_P_{limit_2}} * 1g_or_10gSAR_P_{limit_2} \quad (6b)$$

$$\frac{1}{T_{SAR}}\left[\int_{t-T_{SAR}}^{t_1}\frac{1g_or_10gSAR_1(t)}{FCC\ SAR\ limit}dt+\int_{t-T_{SAR}}^{t}\frac{1g_or_10gSAR_2(t)}{FCC\ SAR\ limit}dt\right]\leq 1$$

(6c)

where, *conducted_Tx_power_1(t)*, *conducted_Tx_power_*P_{limit_1}, and *1g_or_10gSAR_*P_{limit_1} correspond to the measured instantaneous conducted Tx power, measured conducted Tx power at P_{limit}, and measured *1gSAR* or *10gSAR* value at P_{limit} of technology1/band1; *conducted_Tx_power_2(t)*, *conducted_Tx_power_*P_{limit_2}*(t)*, and *1g_or_10gSAR_*P_{limit_2} correspond to the measured instantaneous conducted Tx power, measured conducted Tx power at P_{limit}, and measured *1gSAR* or *10gSAR* value at P_{limit} of technology2/band2. Transition from technology1/band1 to the technology2/band2 happens at time-instant 't_1'.

Test procedure

1. Measure P_{limit} for both the technologies and bands selected in Section 3.2.3. Measure P_{limit} with Smart Transmit enabled and *Reserve_power_margin* set to 0 dB, callbox set to request maximum power.
2. Set *Reserve_power_margin* to actual (intended) value and reset power on EUT to enable Smart Transmit
3. Establish radio link with callbox in first technology/band selected.
4. Request EUT's Tx power at 0 dBm for at least one time window specified for the selected technology/band, followed by requesting EUT's Tx power to be at maximum power for about ~60 seconds, and then switch to second technology/band selected. Continue with callbox requesting EUT's Tx power to be at maximum power for the remaining time of at least another full duration of the specified time window. Measure and record Tx power versus time for the full duration of the test.
5. Once the measurement is done, extract instantaneous Tx power versus time, and convert the conducted Tx power into 1gSAR or 10gSAR value using Eq. (6a) and (6b) and corresponding measured P_{limit} values from Step 1 of this section. Perform the running time average to determine time-averaged power and 1gSAR or 10gSAR versus time.

   NOTE: In Eq.(6a) & (6b), instantaneous Tx power is converted into instantaneous 1gSAR or 10gSAR value by applying the measured worst-case 1gSAR or 10gSAR value at P_{limit} for the corresponding technology/band/antenna/DSI reported in Part 1 report.

6. Make one plot containing: (a) instantaneous Tx power versus time, (b) requested power, (c) computed time-averaged power, (d) time-averaged power limit calculated using Eq.(5a).
7. Make another plot containing: (a) computed time-averaged 1gSAR or 10gSAR versus time, and (b) FCC limit of 1.6 W/kg for 1gSAR or 4.0 W/kg for 10gSAR.

The validation criteria are, at all times, the time-averaged 1gSAR or 10gSAR versus time shall not exceed the FCC limit of 1.6 W/kg for 1gSAR or 4.0 W/kg for 10gSAR (i.e., Eq. (6c)).

3.3.4 Change in antenna

This test is to demonstrate the correct power control by Smart Transmit during antenna switches from one antenna to another. The test procedure is identical to Section 3.3.3, by replacing technology/band switch operation with antenna switch. The validation criteria are, at all times, the time-averaged 1gSAR or 10gSAR versus time shall not exceed FCC limit of 1.6 W/kg for 1gSAR or 4.0 W/kg for 10gSAR.

NOTE: If the EUT does not support antenna switch within the same technology/band, but has multiple antennas to support different frequency bands, then the antenna switch test is included as part of change in technology and band (Section 3.3.3) test.

3.3.5 Change in DSI

This test is to demonstrate the correct power control by Smart Transmit during DSI switches from one DSI to another. The test procedure is identical to Section 3.3.3, by replacing technology/band switch operation with DSI switch. The validation criteria are, at all times, the time-averaged 1gSAR or 10gSAR versus time shall not exceed FCC limit of 1.6 W/kg for 1gSAR or 4.0 W/kg for 10gSAR.

3.3.6 Change in time window

This test is to demonstrate the correct power control by Smart Transmit during the change in averaging time window when a specific band handover occurs. FCC specifies time-averaging windows of 100s for Tx frequency < 3GHz, and 60s for Tx frequency between 3GHz and 6GHz.

To validate the continuity of RF exposure limiting during the transition, the band handover test needs to be performed when EUT handovers from operation band less than 3GHz to greater than 3GHz and vice versa. The equations (3a) and (3b) in Section 2 can be written as follows for transmission scenario having change in time window,

$$1gSAR_1(t) = \frac{conducted_Tx_power_1(t)}{conducted_Tx_power_P_{limit_1}} * 1g_or\ 10g_SAR_P_{limit_1} \quad (7a)$$

$$1gSAR_2(t) = \frac{conducted_Tx_power_2(t)}{conducted_Tx_power_P_{limit_2}} * 1g_or\ 10g_SAR_P_{limit_2} \quad (7b)$$

$$\frac{1}{T1_{SAR}}\left[\int_{t-T1_{SAR}}^{t_1} \frac{1g_or\ 10g_SAR_1(t)}{FCC\ SAR\ limit} dt\right] + \frac{1}{T2_{SAR}}\left[\int_{t-T2_{SAR}}^{t} \frac{1g_{or}10g_SAR_2(t)}{FCC\ SAR\ limit} dt\right] \leq 1 \quad (7c)$$

where, *conducted_Tx_power_1(t)*, *conducted_Tx_power_P*$_{limit_1}$*(t)*, and *1g_ or 10g_SAR_P*$_{limit_1}$ correspond to the instantaneous Tx power, conducted Tx power at P_{limit}, and compliance *1g_ or 10g_SAR* values at P_{limit_1} of band1 with time-averaging window '$T1_{SAR}$'; *conducted_Tx_power_2(t)*, *conducted_Tx_power_P*$_{limit_2}$*(t)*, and *1g_ or 10g_SAR_P*$_{limit_2}$ correspond to the instantaneous Tx power, conducted Tx power at P_{limit}, and compliance *1g_ or 10g_SAR* values at P_{limit_2} of band2 with time-averaging window '$T2_{SAR}$'. One of the two bands is less than 3GHz, another is greater than 3GHz. Transition from first band with time-averaging window '$T1_{SAR}$' to the second band with time-averaging window '$T2_{SAR}$' happens at time-instant 't_1'.

Test procedure

1. Measure P_{limit} for both the technologies and bands selected in Section 3.2.6. Measure P_{limit} with Smart Transmit enabled and *Reserve_power_margin* set to 0 dB, callbox set to request maximum power.
2. Set *Reserve_power_margin* to actual (intended) value and enable Smart Transmit

Transition from 100s time window to 60s time window, and vice versa

3. Establish radio link with callbox in the technology/band having 100s time window selected in Section 3.2.6.
4. Request EUT's Tx power to be at 0 dBm for at least 100 seconds, followed by requesting EUT's Tx power to be at maximum power for about ~140 seconds, and then switch to second technology/band (having 60s time window) selected in Section 3.2.6. Continue with callbox requesting EUT's Tx power to be at maximum power for about ~60s in this second technology/band, and then switch back to the first technology/band. Continue with callbox requesting EUT's Tx power to be at maximum power for at least another 100s. Measure and record Tx power versus time for the entire duration of the test.
5. Once the measurement is done, extract instantaneous Tx power versus time, and convert the conducted Tx power into 1gSAR or 10gSAR value (see Eq. (7a) and (7b)) using corresponding technology/band Step 1 result, and then perform 100s running average to determine time-averaged 1gSAR or 10gSAR versus time. Note that in Eq.(7a) & (7b), instantaneous Tx power is converted into instantaneous 1gSAR or 10gSAR value by applying the worst-case 1gSAR or 10gSAR value tested in Part 1 for the selected technologies/bands at P_{limit}.
6. Make one plot containing: (a) instantaneous Tx power versus time measured in Step 4.
7. Make another plot containing: (a) instantaneous 1gSAR versus time determined in Step 5, (b) computed time-averaged 1gSAR versus time determined in Step 5, and (c) corresponding regulatory $1gSAR_{limit}$ of 1.6W/kg or $10gSAR_{limit}$ of 4.0W/kg.

Transition from 60s time window to 100s time window, and vice versa

8. Establish radio link with callbox in the technology/band having 60s time window selected in Section 3.2.6.
9. Request EUT's Tx power to be at 0 dBm for at least 60 seconds, followed by requesting EUT's Tx power to be at maximum power for about ~80 seconds, and then switch to second technology/band (having 100s time window) selected in Section 3.2.6. Continue with callbox requesting EUT's Tx power to be at maximum power for about ~100s in this second technology/band, and then switch back to the first technology/band. Continue with callbox requesting EUT's Tx power to be at maximum power for the remaining time for a total test time of 500 seconds. Measure and record Tx power versus time for the entire duration of the test.
10. Repeat above Step 5~7 to generate the plots

The validation criteria is, at all times, the time-averaged 1gSAR or 10gSAR versus time shall not exceed the regulatory $1gSAR_{limit}$ of 1.6W/kg or $10gSAR_{limit}$ of 4.0W/kg

3.3.7 SAR exposure switching

This test is to demonstrate that Smart Transmit feature is accurately accounts for switching in exposures among SAR from radio1 only, SAR from both radio1 and radio2, and SAR from radio2 only scenarios, and ensures total time-averaged RF exposure complies with the FCC limit. Here, radio1 represents primary radio (for example, LTE anchor in a NR non-standalone mode call) and radio2 represents secondary radio (for example, 5G NR or mmW NR). The detailed test procedure for SAR exposure switching in the case of LTE+5G NR non-standalone mode transmission scenario is provided in Appendix B.2.

Test procedure:

1. Measure conducted Tx power corresponding to P_{limit} for radio1 and radio2 in selected band. Test condition to measure conducted P_{limit} is:
   - □ Establish device in call with the callbox for radio1 technology/band. Measure conducted Tx power corresponding to radio1 P_{limit} with Smart Transmit enabled and *Reserve_power_margin* set to 0 dB, callbox set to request maximum power.
   - □ Repeat above step to measure conducted Tx power corresponding to radio2 P_{limit}. If radio2 is dependent on radio1 (for example, non-standalone mode of 5G NR requiring radio1 LTE as anchor), then establish radio1 + radio2 call with callbox, and request all down bits for radio1 LTE. In this scenario, with callbox requesting maximum power from radio2 5G NR, measured conducted Tx power corresponds to radio2 P_{limit} (as radio1 LTE is at all-down bits)
2. Set *Reserve_power_margin* to actual (intended) value, with EUT setup for radio1 + radio2 call. In this description, it is assumed that radio2 has lower priority than radio1. Establish device in radio1+radio2 call, and request all-down bits or low power on radio1, with callbox requesting EUT's Tx power to be at maximum power in radio2 for at least one time window. After one time window, set callbox to request EUT's Tx power to be at maximum power on radio1, i.e., all-up bits. Continue radio1+radio2 call with both radios at maximum power for at least one time window, and drop (or request all-down bits on) radio2. Continue radio1 at maximum power for at least one time window. Record the conducted Tx power for both radio1 and radio2 for the entire duration of this test.
3. Once the measurement is done, extract instantaneous Tx power versus time for both radio1 and radio2 links. Convert the conducted Tx power for both these radios into 1gSAR or 10gSAR value (see Eq. (6a) and (6b)) using corresponding technology/band P_{limit} measured in Step 1, and then perform the running time average to determine time-averaged 1gSAR or 10gSAR versus time.
4. Make one plot containing: (a) instantaneous Tx power versus time measured in Step 2.
5. Make another plot containing: (a) instantaneous 1gSAR versus time determined in Step 3, (b) computed time-averaged 1gSAR versus time determined in Step 3, and (c) corresponding regulatory $1gSAR_{limit}$ of 1.6W/kg or $10gSAR_{limit}$ of 4.0W/kg.

The validation criteria is, at all times, the time-averaged 1gSAR or 10gSAR versus time shall not exceed the regulatory $1gSAR_{limit}$ of 1.6W/kg or $10gSAR_{limit}$ of 4.0W/kg.

3.3.8 Test procedure for System level compliance continuity

3.3.8.1 WWAN/WLAN/BT radio System level compliance continuity

Below is the test flow outline of the system level compliance test. The test contains 6 sections and 5 transitions: Start with WWAN radio transmission (Section A), transition to WLAN transmission (Section B), transition to simultaneous transmission of WWAN + WLAN + BT + RFID (Section C), then drop off WWAN radio and set WWAN to airplane mode, at the same time transition to WLAN+BT transmission simultaneously (Section D), transition to BT only transmission (Section E), and finally transition to WLAN only transmission (Section F) and finally transition back to simultaneous transmission of WWAN + WLAN + BT with modem online while the USB is disconnected.

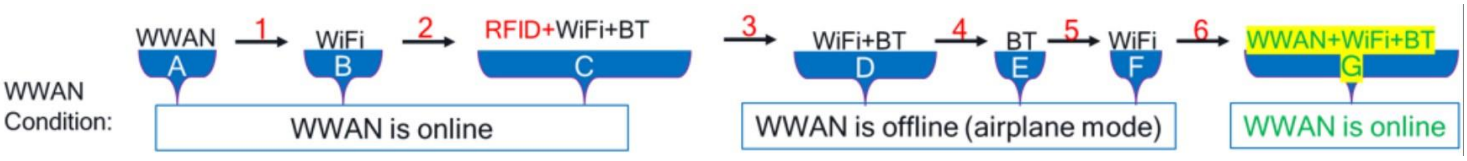

Figure 3-2 Schematic of technology transitions for system level compliance continuity test

It is recommended for OEMs to demonstrate compliance at system level, i.e., demonstrate compliance continuity across technologies, i.e., across WWAN, WLAN, BT, etc. In this regard, a new test case is designed to test the time-averaged RF exposure compliance continuity in the following scenarios with 6 transitions while the USB is disconnected:

1. Across technology switch
2. During transition from single technology to multiple technology
3. In transition when WWAN went from ON to airplane mode
4. Active WLAN radio and/or BT radio without WWAN
5. Time window transition between WLAN and BT when WWAN is in airplane mode (this segment of test is not needed for ICNIRP as both WLAN and BT operate in same time averaging window)
6. In transition when WWAN went from airplane mode to ON.

Test configuration selection criteria:
If the device supports simultaneous transmission of WWAN, WLAN and BT, then the selection criteria for system level compliance continuity test is:

■ For a given DSI and antenna group, select band/antenna configurations for WWAN, WLAN and BT technologies that have the largest (*Pmax* – *Plimit*) delta. In case of multiple bands/antennas having the same difference between *Pmax* and *Plimit* within a given technology, then select any one band/antenna out of them.

NOTE:

1. The antennas corresponding to the selected technologies/bands for the system level compliance continuity test case should be in the same antenna group.
2. For this test, WLAN radio configuration is selected different from 2.4GHz band so as to not interfere with BT measurements. Therefore, select least Plimit configuration for WLAN outside the 2.4GHz band.

Test procedure:

1. Measure conducted Tx power corresponding to *Plimit* for all three (WWAN, WLAN & BT) technologies in the selected radio configurations. Test condition to measure conducted *Plimit* for each technology is:
   - Establish device in call with the callbox for the first technology in desired band. Measure conducted Tx power corresponding to the first technology *Plimit* with Smart Transmit Peak exposure mode enabled and callbox set to request maximum power (or maximum duty cycle in case of WLAN/BT).
   - Repeat above step to measure conducted Tx power corresponding to the remaining two technologies' *Plimit*. In the case of BT, measured conducted Tx power is compensated by tested duty cycle and BT_STANDALONE EFS parameter, i.e., measured *Plimit* = conducted power measured in BT standalone condition / BT_STANDALONE / BT_duty_cycle.
2. Set EUT to the intended Smart Transmit exposure mode.
3. As depicted in Figure S-1, first
   i. Section A: Establish WWAN connection with the callbox in selected WWAN radio configuration. Request EUT to transmit at 0 dBm for at least one WWAN time window (100s or 60s), followed by requesting EUT to transmit at maximum Tx power for {one WWAN time window (T_{WWAN} = 100s if f < 3GHz or 60s if 3GHz < f < 6GHz for FCC, 360s for ICNIRP) + the maximum high power duration allowed in one T_{WWAN}}, denoted as T_{A_WWAN}.
   ii. Section B: After T_{A_WWAN}, drop WWAN connection and establish WLAN connection with the callbox in selected WLAN radio configuration and request EUT to transmit at maximum duty cycle (and maximum power) for {one WLAN time-window duration (T_{WLAN} = 30s for all WLAN frequency bands for FCC, 360s for ICNIRP) + the maximum high power duration allowed in one T_{WLAN}}, denoted T_{B_WLAN}.
   iii. Section C: After T_{B_WLAN}, add the selected WWAN and BT radios to have the simultaneous transmission of WWAN + WLAN + BT. Request WWAN radio to transmit at maximum power and request WLAN & BT radios to transmit at maximum duty cycle (and maximum power) for at least one max {T_{A_WWAN}, T_{B_WLAN}, T_{BT}}, where, T_{BT} = 100s for FCC, 360s for ICNIRP.
   iv. Section D: Drop WWAN connection and set WWAN modem into airplane mode. Continue requesting WLAN & BT radios to transmit at maximum duty cycle (and maximum power) for at least two times the max {T_{WLAN}, T_{BT}}.
   v. Section E: Drop WLAN connection. Continue requesting BT radio to transmit at maximum duty cycle (and maximum power). Continue the test for at least one T_{BT}.
   vi. Section F: In the case of FCC time windows, after at least one T_{BT}, drop BT connection and establish back WLAN connection in selected radio configuration. Continue requesting WLAN radio to transmit at maximum duty cycle (and maximum power). Continue the test for at least one max {T_{WLAN}, T_{BT}}. In the case of ICNIRP time windows, Section F is not required.

4. Once the measurement is done, extract instantaneous Tx power versus time for all WWAN, WLAN and BT radios in selected configurations. Similar to technology/band switch test in Section 5.3.3, convert the conducted Tx power for both these radios into 1g_or_10gSAR value (see Eq. (7a) and (7b)) using corresponding technology/band *Plimit* measured in Step 1, and then perform running average over corresponding time-windows (i.e., 100s/60s for WWAN radio, 30s for WLAN radio and 100s for BT radio in case of FCC time-windows, and 360s for all of them in case of ICNIRP time-windows) to determine time-averaged 1g_or_10gSAR versus time as illustrated in Figure 3-1.
5. Make one plot containing: (a) computed normalized time-averaged 1g_or_10gSAR for WWAN radio configuration versus time determined in Step 4, (b) computed normalized time-averaged 1g_or_10gSAR for WLAN radio configuration versus time determined in Step 4, (c) computed normalized time-averaged 1g_or_10gSAR for WLAN radio configuration versus time determined in Step 4, (d) computed total normalized time-averaged 1g_or_10gSAR versus time (sum of Steps (5.a), (5.b) and (5.c)) determined in Step 4, and (e) corresponding normalized regulatory *1g_or_10gSARlimit* limit of 1.0.

The validation criteria is, at all times, the time-averaged 1g_or_10gSAR versus time shall not exceed the regulatory *1g_or_10gSARlimit* limit.

3.3.9 Test procedure for Antenna Switch Across AGs with Simultaneous Transmission on Shared Antenna

The purpose of the test is to demonstrate that Smart Transmit ensures time-averaged RF exposure compliance for each antenna group when the device is switching antennas across AGs/MGs on one radio while the other radio has RF exposure contribution to both AGs/MGs due to transmission on shared antenna.

Test procedure:

1. For selected radio configurations, measure conducted Tx power corresponding to Plimit for sub6 radios in selected tech/band/antenna/DSI. Test condition to measure conducted Plimit is:
   a. Sub6 radio(s): Measure conducted Tx power corresponding to Plimit for sub6 radio in selected band/antenna with Smart Transmit Peak exposure mode enabled. Establish device in call with the callbox for LTE in selected band/antenna and callbox set to request maximum power.
2. Set EUT to the intended Smart Transmit exposure mode.
   a. Establish radio1 + radio2 links, and request EUT to transmit at 0dBm (or low power) for at least one time window, followed by requesting EUT to transmit at maximum power on both radios for one time window (i.e., larger time window in case of selected radios operating in different time windows) + the maximum high power duration allowed out of both radios (i.e., larger time window radio, if both radios operate in same time window then use the largest high power duration out of two radios) so that the radio operating in larger time window is at reserve level. Measure and record the transmitted power for both radios versus time.
   b. Switch the transmitting antenna of radio1 from one AG to another (radio1 tech/band may also be switched), while radio2 continues to transmit on the shared antenna. Request EUT to transmit at maximum Tx power on both radios for at least one time window (i.e., larger time window in case of selected radios operating in different time windows). Continue measuring and record the transmitted power for both radios versus time.
3. Once the measurement is done, extract instantaneous Tx power versus time for both radio1 and radio2 configurations on each transmitting antenna and segregate into 3 separate data sets, i.e.,
   - Instantaneous Tx power versus time for radio1 in antenna in AG0
   - Instantaneous Tx power versus time for radio1 in antenna in AG1
   - Instantaneous Tx power versus time for radio2 in shared antenna across AGs

   For sub6 radios: Convert the conducted Tx power into 1gSAR value (see Eq. (1a)) using Step 1.a result, and then divide this by regulatory 1gSAR limit of 1.6W/kg to obtain instantaneous normalized 1gSAR versus time. Perform running average over corresponding regulatory time-window for selected radio configuration to determine normalized time-averaged 1gSAR versus time as illustrated in Figure 3-1.

   Then determine:
   A. Normalized time-averaged RF exposure for radio1 in antenna belonging to AG0
   B. Normalized time-averaged RF exposure for radio1 in antenna belonging to AG1
   C. Normalized time-averaged RF exposure for radio2 on shared antenna belonging to both AGs.

   Note that all of the three above test results are on the same time axis starting from t = 0

seconds to the entire duration of the test.

4. Make one plot containing for AG0: (a) computed normalized time-averaged RF exposure for radio1 in antenna belonging to AG0, i.e., Step 3A, (b) computed normalized time-averaged RF exposure for radio2 in shared antenna belonging to AG0, i.e., Step 3C, (c) computed total normalized time-averaged 1g_or_10gSAR versus time from both radio1 and radio2 belonging to AG0, i.e., summation of Step 3A + Step 3C, and (d) corresponding normalized regulatory *1g_or_10gSARlimit* limit of 1.0.
5. Make one plot containing for AG1: (a) computed normalized time-averaged RF exposure for radio1 in antenna belonging to AG1, i.e., Step 3B, (b) computed normalized time-averaged RF exposure for radio2 in shared antenna belonging to AG1, i.e., Step 3C, (c) computed total normalized time-averaged 1g_or_10gSAR versus time from both radio1 and radio2 belonging to AG1, i.e., summation of Step 3B + Step 3C, and (d) corresponding normalized regulatory *1g_or_10gSARlimit* limit of 1.0.

The validation criteria is, at all times, the normalized time-averaged 1g_or_10gSAR versus time shall not exceed the "*multi_Tx_factor* * maximum{*reported* 1g_or_10gSAR of radio1, *reported* 1g_or_10gSAR of radio2} / (regulatory *1g_or_10gSARlimit* limit)" in both AG0 and AG1.

3.4 Test procedure for time-varying SAR measurements

This section provides general time-varying SAR measurement procedures to perform compliance test under dynamic transmission scenarios described in Section 2. In practice, an adjustment can be made in these procedures. The justification/clarification may be provided.

To perform the validation through SAR measurement for transmission scenario 1 described in Section 2, the "path loss" between callbox antenna and EUT needs to be calibrated to ensure that the EUT Tx power reacts to the requested power from callbox in a radiated call. It should be noted that when signaling in closed loop mode, protocol-level power control is in play, resulting in EUT not solely following callbox TPC (Tx power control) commands. In other words, EUT response has many dependencies (RSSI, quality of signal, path loss variation, fading, etc.,) other than just TPC commands. These dependencies have less impact in conducted setup (as it is a controlled environment and the path loss can be very well calibrated) but have significant impact on radiated testing in an uncontrolled environment, such as SAR test setup. Therefore, the deviation in EUT Tx power from callbox requested power is expected, however the time-averaged SAR should not exceed FCC SAR requirement at all times as Smart Transmit controls Tx power at EUT.

The following steps are for time averaging feature validation through SAR measurement:

1. "Path Loss" calibration: Place the EUT against the phantom in the worst-case position determined based on Section 3.2.1. For each band selected, prior to SAR measurement, perform "path loss" calibration between callbox antenna and EUT. Since the SAR test environment is not controlled and well calibrated for OTA (Over the Air) test, extreme care needs to be taken to avoid the influence from reflections. The test setup is described in Section 7.1.
2. Time averaging feature validation:
   - i For a given radio configuration (technology/band) selected in Section 3.2.1, enable Smart Transmit and set *Reserve_power_margin* to 0 dB, with callbox to request maximum power, perform area scan, conduct pointSAR measurement at peak location of the area scan. This point SAR value, $pointSAR_P_{limit}$, corresponds to point SAR at the measured P_{limit} (i.e., measured P_{limit} from the EUT in Step 1 of Section 3.3.1).
   - ii Set *Reserve_power_margin* to actual (intended) value and reset power on EUT to enable Smart Transmit. Note, if *Reserve_power_margin* cannot be set wirelessly, care must be taken to re-position the EUT in the exact same position relative to the SAM phantom as in above Step 2.i. Establish radio link in desired radio configuration, with callbox requesting the EUT's Tx power at power levels described by test sequence 1 generated in Step 1 of Section 3.3.1, conduct point SAR measurement versus time at peak location of the area scan determined in Step 2.i of this section. Once the measurement is done, extract instantaneous point SAR vs time data, *pointSAR(t)*, and convert it into instantaneous 1gSAR or 10gSAR vs. time using Eq. (3a), re-written below:

     $$1g_or_10gSAR(t) = \frac{pointSAR(t)}{pointSAR_P_{limit}} * 1g_or_10gSAR_P_{limit}$$

     where, $pointSAR_P_{limit}$ is the value determined in Step 2.i, and *pointSAR(t)* is the instantaneous point SAR measured in Step 2.ii, $1g_or_10gSAR_P_{limit}$ is the measured 1gSAR or 10gSAR value listed in Part 1 report.
   - iii Perform 100s running average to determine time-averaged 1gSAR or 10gSAR versus time.

iv Make one plot containing: (a) time-averaged 1gSAR or 10gSAR versus time determined in Step 2.iii of this section, (b) FCC limit of 1.6 W/kg for 1gSAR or 4.0 W/kg for 10gSAR.

v Repeat 2.ii ~ 2.iv for test sequence 2 generated in Step 1 of Section 3.3.1.

vi Repeat 2.i ~ 2.v for all the technologies and bands selected in Section 3.2.1.

The time-averaging validation criteria for SAR measurement is that, at all times, the time-averaged 1gSAR or 10gSAR versus time shall not exceed FCC limit of 1.6 W/kg for 1gSAR or 4.0 W/kg for 10gSAR (i.e., Eq. (3b)).

4. Test Configurations

4.1 WWAN (sub-6) transmission

The Plimit values, corresponding to SAR_design_target, for technologies and bands supported by EUT are derived in Part 0 report and summarized in Table 4-1. Note all P_{limit} power levels entered in Table 4-1 correspond to average power levels after accounting for duty cycle in the case of TDD modulation schemes (for e.g., GSM, LTE TDD & 5G NR TDD).

*Pmax is used for RF tune up procedure. The maximum allowed output power is equal to Pmax + Total uncertainty.

Maximum target power, Pmax, is configured in NV settings in EUT to “limit maximum transmitting power”. This power is converted into “peak power in NV settings for TDD schemes”. The EUT maximum allowed output power is equal to Pmax + Total uncertainty. EFS file Plimit level will compare to Pmax, when Plimit is high than Pmax, the power will be limited to Pmax power level.

**All Plimit power levels entered in the Table correspond to average power levels after accounting for duty cycle in the case TDD modulation schemes (for e.g., GSM & LTE TDD & NR TDD).

Based on selection criteria described in Section 3.2.1, the selected technologies/bands for testing time-varying test sequences are listed in Table 4-1.

The radio configurations used in Part 2 test for selected technologies, bands, DSIs and antennas are listed in Table 4-2. The corresponding worst-case radio configuration 1gSAR or 10gSAR values for selected technology/band/DSI are extracted from Part 1 report and are listed in the last column of Table 4-2.

Based on equations (1a) and (3a), it is clear that Part 2 testing outcome is normalized quantity, which implies that it can be applied to any radio configuration within a selected technology/band/DSI. Thus, as long as applying the worst-case SAR obtained from the worst radio configuration in Part 1 testing to calculate time-varying SAR exposure in equations (1a) and (3a), the accuracy in compliance demonstration remains the same.

Table 4-1: P_{limit} for supported technologies and bands (P_{limit} in EFS file)

Wireless Technology	Antenna	Duty cycle	1g SAR design target (W/kg)	Tolerance (dB)	Plimit	PMAX
WCDMA_B2	Main	100%	0.95	1	16.2	23.5
WCDMA_B4	Main	100%	0.95	1	16.3	23.5
WCDMA_B5	Main	100%	0.95	1	19	23.5
LTE_B2	Main	100%	0.95	1	16.7	23.0
LTE_B2	MIMO2	100%	0.95	1	19	23.0
LTE_B4	Main	100%	0.95	1	17	23.0
LTE_B4	MIMO2	100%	0.95	1	19.9	23.0
LTE_B5	Main	100%	0.95	1	19.8	23.5
LTE_B7	Main	100%	0.95	1	15.7	23.0
LTE_B7	MIMO2	100%	0.95	1	19.5	23.0
LTE_B12	Main	100%	0.95	1	20.7	23.5
LTE_B13	Main	100%	0.95	1	21.5	23.5
LTE_B14	Main	100%	0.95	1	21.4	23.5
LTE_B17	Main	100%	0.95	1	20.7	23.5
LTE_B25	Main	100%	0.95	1	16.7	23.0
LTE_B25	MIMO2	100%	0.95	1	19	23.0
LTE_B26	Main	100%	0.95	1	19.8	23.5
LTE_B30	Main	100%	0.95	1	15.1	22.0
LTE_B30	MIMO2	100%	0.95	1	19.7	22.0
LTE_B38	Main	63.3%	0.95	1	14.9	21.0
LTE_B38	MIMO2	63.3%	0.95	1	15.4	21.0
LTE_B39	Main	63.3%	0.95	1	16.7	21.0
LTE_B41	Main	63.3%	0.95	1	14.9	21.0
LTE_B41(PC2)	Main	43.3%	0.95	1		22.4
LTE_B41	MIMO2	63.3%	0.95	1	15.4	21.0
LTE_B41(PC2)	MIMO2	43.3%	0.95	1		22.4
LTE_B42	Main	63.3%	0.95	1	13.8	21.0
LTE_B42	MIMO2	63.3%	0.95	1	14.7	21.0
LTE_B43	Main	63.3%	0.95	1	15.8	21.0
LTE_B43	MIMO2	63.3%	0.95	1	19.5	21.0
LTE_B48	Main	63.3%	0.95	1	13.8	19.0
LTE_B48	MIMO2	63.3%	0.95	1	19.5	19.0
LTE_B66	Main	100%	0.95	1	17	23.0
LTE_B66	MIMO2	100%	0.95	1	19.9	23.0
LTE_B71	Main	100%	0.95	1	21.9	23.5
NR5G_N2	Main	100%	0.95	1	17.1	23.0
NR5G_N2	MIMO2	100%	0.95	1	18.7	23.0
NR5G_N5	Main	100%	0.95	1	19.4	23.5
NR5G_N7	Main	100%	0.95	1	16	23.0
NR5G_N7	MIMO2	100%	0.95	1	19.8	23.0
NR5G_N12	Main	100%	0.95	1	21.1	23.5
NR5G_N13	Main	100%	0.95	1	20.2	23.5
NR5G_N14	Main	100%	0.95	1	20.1	23.5
NR5G_N25	Main	100%	0.95	1	17.1	23.0
NR5G_N25	MIMO2	100%	0.95	1	18.7	23.0
NR5G_N26	Main	100%	0.95	1	19.4	23.5
NR5G_N30	Main	100%	0.95	1	15.8	22.0
NR5G_N30	MIMO2	100%	0.95	1	20.7	22.0
NR5G_N38	Main	100%	0.95	1	15.2	23.0
NR5G_N38	MIMO2	100%	0.95	1	14.7	23.0
NR5G_N41	Main	100%	0.95	1	15.2	23.0
NR5G_N41(PC2)	Main	50%	0.95	1		23.0

NR5G_N41(PC1.5)	Main	50%	0.95	1		22.0
NR5G_N41	MIMO2	100%	0.95	1	14.7	23.0
NR5G_N41(PC2)	MIMO2	50%	0.95	1		23.0
NR5G_N41(PC1.5)	MIMO2	50%	0.95	1		22.0
NR5G_N41	MIMO1	100%	0.95	1	18.5	23.0
NR5G_N41(PC2)	MIMO1	50%	0.95	1		23.0
NR5G_N41(PC1.5)	MIMO1	50%	0.95	1		22.0
NR5G_N41	Aux	100%	0.95	1	20.1	23.0
NR5G_N41(PC2)	Aux	50%	0.95	1		23.0
NR5G_N41(PC1.5)	Aux	50%	0.95	1		22.0
NR5G_N48	Main	100%	0.95	1	14.3	21.0
NR5G_N48	MIMO2	100%	0.95	1	19.9	21.0
NR5G_N66	Main	100%	0.95	1	17	23.0
NR5G_N66	MIMO2	100%	0.95	1	19.1	23.0
NR5G_N71	Main	100%	0.95	1	21.3	23.5
NR5G_N77	Main	100%	0.95	1	14	23.0
NR5G_N77(PC2)	Main	50%	0.95	1		23.0
NR5G_N77(PC1.5)	Main	50%	0.95	1		22.0
NR5G_N77	MIMO2	100%	0.95	1	16	23.0
NR5G_N77(PC2)	MIMO2	50%	0.95	1		23.0
NR5G_N77(PC1.5)	MIMO2	50%	0.95	1		22.0
NR5G_N77	MIMO1	100%	0.95	1	20	23.0
NR5G_N77(PC2)	MIMO1	50%	0.95	1		23.0
NR5G_N77(PC1.5)	MIMO1	50%	0.95	1		22.0
NR5G_N77	Aux	100%	0.95	1	18.8	23.0
NR5G_N77(PC2)	Aux	50%	0.95	1		23.0
NR5G_N77(PC1.5)	Aux	50%	0.95	1		22.0
NR5G_N78	Main	100%	0.95	1	14	23.0
NR5G_N78(PC2)	Main	50%	0.95	1		23.0
NR5G_N78(PC1.5)	Main	50%	0.95	1		22.0
NR5G_N78	MIMO2	100%	0.95	1	16	23.0
NR5G_N78(PC2)	MIMO2	50%	0.95	1		23.0
NR5G_N78(PC1.5)	MIMO2	50%	0.95	1		22.0
NR5G_N78	MIMO1	100%	0.95	1	20	23.0
NR5G_N78(PC2)	MIMO1	50%	0.95	1		23.0
NR5G_N78(PC1.5)	MIMO1	50%	0.95	1		22.0
NR5G_N78	Aux	100%	0.95	1	18.8	23.0
NR5G_N78(PC2)	Aux	50%	0.95	1		23.0
NR5G_N78(PC1.5)	Aux	50%	0.95	1		22.0

To account for total uncertainty, SAR_design_target should be determined as:

$$SAR_design_target < SAR_{regulatory_limit} \times 10^{\frac{-total\ uncertainty}{10}}$$

Table 4-2: Radio configurations selected for Part 2 test

Test case #	Test scenario	Band	Modulation	Gap (mm)	Antenna	DSI	Channel	Freq (MHz)	Part 1, SAR@Plimit 1-g SAR (W/kg)	Part2 Test Result: SAR (W/kg)
1	Time-Varying Seq	WCDMA B2	RMC 12.2Kbps	0	Main	1	9400	1880	0.664	0.612
2		WCDMA B5	RMC 12.2Kbps	0	Main	1	4182	836.4	0.5	0.558
3		B41	20M_QPSK_1_0	0	Main	1	41490	2680	0.555	0.623
4		B71	20M_QPSK_1_0	0	Main	1	133297	680.5	0.813	0.709
5		FR1 n71	20M_BPSK_1_1	0	Main	1	136100	680.5	0.661	0.675
6		FR1 n77	100M_BPSK_1_1	0	Main	1	633332	3499.98	0.385	0.575
7	Call Drop	B41	20M_QPSK_1_0	0	Main	1	41490	2680	0.555	0.613
Test case #	Test scenario	Band	Modulation	Gap (mm)	Antenna	DSI	Channel	Freq (MHz)	Part 1, SAR@Plimit 1-g SAR (W/kg)	Part2 Test Result: Total Exposure Ratio
8	Tech/band switch	B41	20M_QPSK_1_0	0	Main	1	41490	2680	0.555	0.398
		WCDMA B2	RMC 12.2Kbps	0	Main	1	9400	1880	0.664	
9	Change in Time Window (100-60-100s)	B71	20M_QPSK_1_0	0	Main	1	133297	680.5	0.813	0.528
		B48	20M_QPSK_1_0	0	Main	1	56640	3690	0.399	
10	Change in Time Window (60-100-60s)	B48	20M_QPSK_1_0	0	Main	1	56640	3690	0.399	0.493
		B71	20M_QPSK_1_0	0	Main	1	133297	680.5	0.813	

Note that the EUT has a several DSI states to manage power for different RF exposure conditions, detail DSI states and trigger conditions shown on the following table, the maximum 1gSAR/or 10gSAR among all exposure scenarios is used in Smart Transmit feature for time averaging operation.

5. Conducted Power Test Results for Sub-6 Smart Transmit Feature Validation

5.1 Measurement setup

The Rohde & Schwarz CMW500 callbox is used in this test. The test setup schematic are shown in Figures 5-1. For single antenna measurement, one port (RF1 COM) of the callbox is connected to the RF port of the EUT using a directional coupler. For antenna & technology switch measurement, two ports (RF1 COM and RF3 COM) of the callbox used for signaling two different technologies are connected to a combiner, which is in turn connected to a directional coupler. The other end of the directional coupler is connected to a splitter to connect to two RF ports of the EUT corresponding to the two antennas of interest. In both the setups, power meter is used to tap the directional coupler for measuring the conducted output power of the EUT. For time averaging validation test (Section 3.3.1), call drop test (Section 3.3.2), and DSI switch test (Section 3.3.4), only RF1 COM port of the callbox is used to communicate with the EUT. For technology/band switch measurement (Section. 3.3.3), both RF1 COM and RF3 COM port of callbox are used to switch from one technology communicating on RF1 COM port to another technology communicating on RF3 COM port. All the path losses from RF port of EUT to the callbox RF COM port and to the power meter are calibrated and automatically entered as offsets in the callbox and the power meter via test scripts on the PC used to control callbox and power meter.

Sub6 NR test setup:
The Keysight UXM E7515B callbox is used in this test. The test setup schematic are shown in Figures 5-1. For single antenna measurement, one port (RF1 COM) of the callbox is connected to the RF port of the EUT using a directional coupler.

LTE+5G NR test setup:
The Keysight UXM E7515B callbox is used in this test. If LTE conducted port and 5G NR conducted port are same on this EUT (i.e., they share the same antenna), therefore, low-/high-pass filter are used to separate LTE and 5G NR signals for power meter measurement via directional couplers, as shown in below Figure 5-1 C (Appendix G Test Setup Photo).

All the path losses from RF port of DUT to the callbox RF COM port and to the power meter are calibrated and automatically entered as offsets in the callbox and the power meter via test scripts on the PC used to control callbox and power meter.

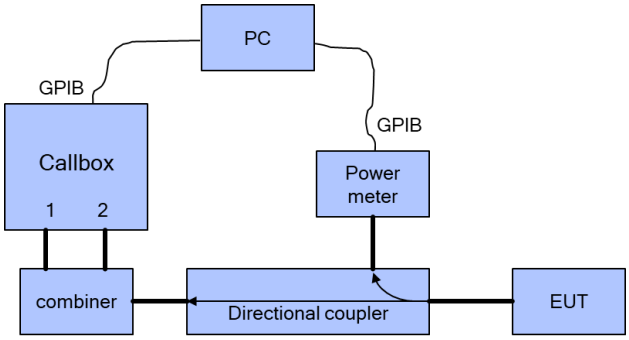

(a)

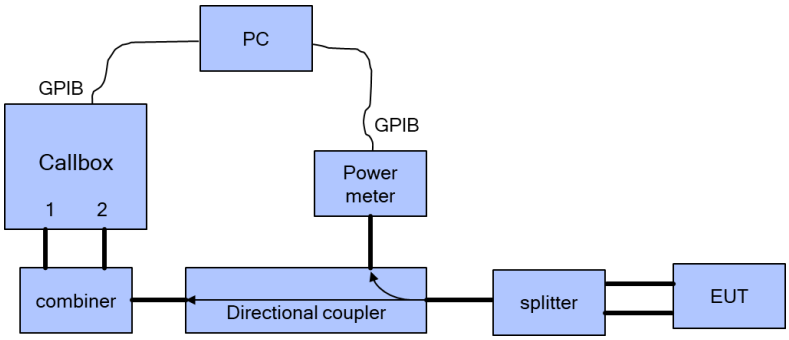

(b)

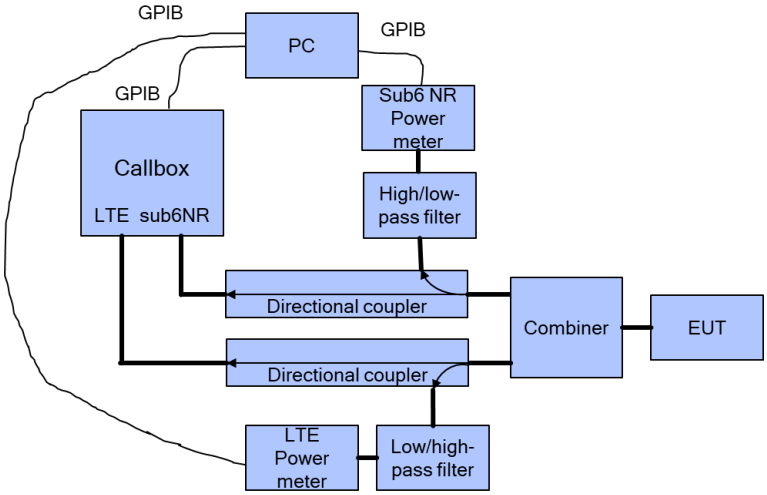

(c)

Figure 5-1 Conducted power measurement setup

WLAN Test Setup – SISO

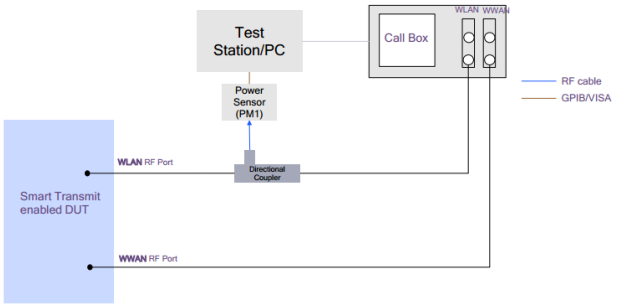

WLAN Test setup - MIMO

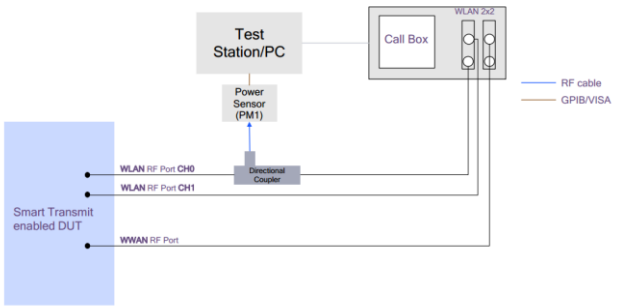

WLAN DBS Test Setup – SISO

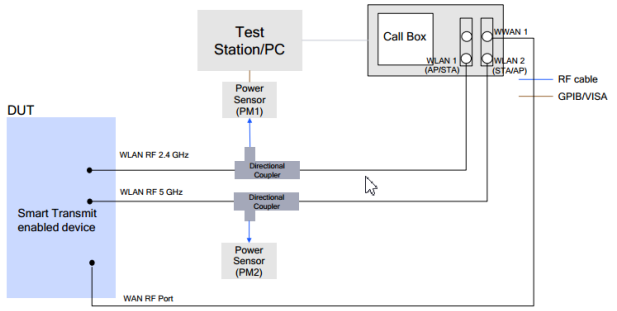

WLAN DBS Test setup - MIMO

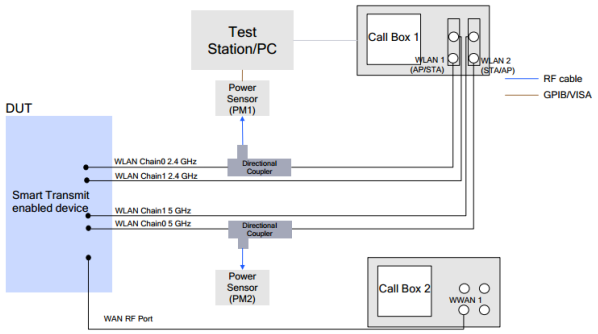

RFID vs WWAN

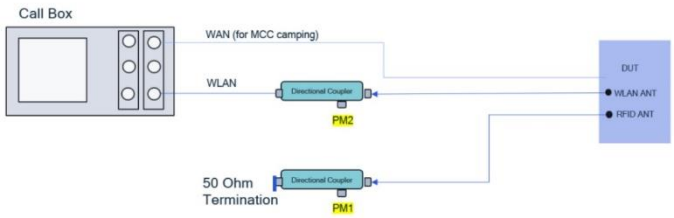

RFID vs WLAN

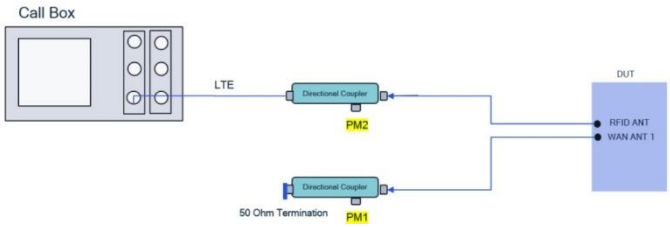

(e)

Figure 5-2 Conducted power measurement setup for WLAN/BT/RFID

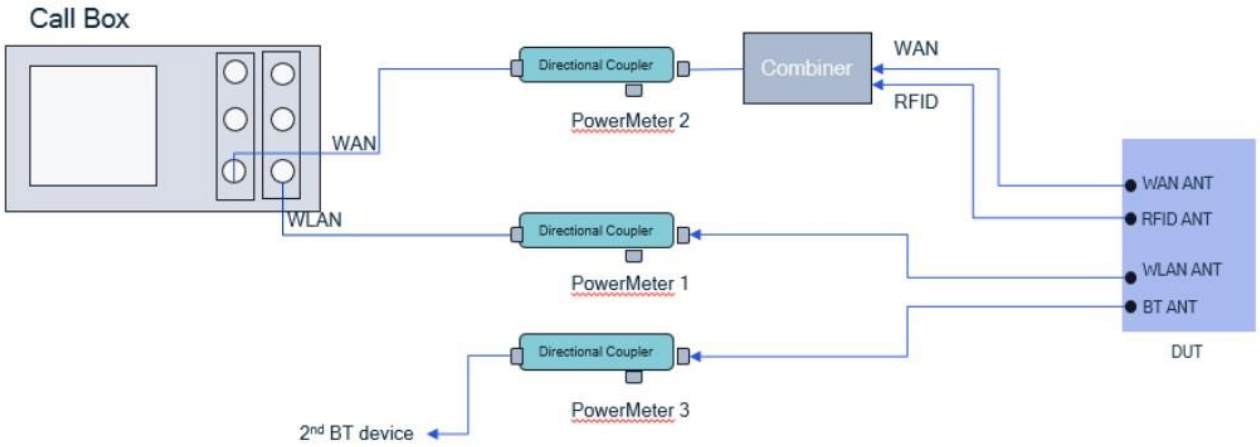

Figure 5-3 System Level Continuity test setup

Both the callbox and power meter are connected to the PC using GPIB cables. Two test scripts are custom made for automation, and the test duration set in the test scripts is 500 seconds.

For time-varying Tx power measurement, the PC runs the 1st test script to send GPIB commands to control the callbox's requested power versus time, while at the same time to record the conducted power measured at EUT RF port using the power meter. The commands sent to the callbox to request power are:

WWAN Band measurement:

- 0dBm for 100 seconds
- test sequence 1 or test sequence 2 (defined in Section 3.1 and generated in Section 3.2.1), for 360 seconds
- stay at the last power level of test sequence 1 or test sequence 2 for the remaining time.

WLAN Band measurement:

- 0 dBm for 100 seconds
- Test sequence #1 (defined in Section 3.1 and generated in Section 3.2.1), For 200 seconds
- Stay at the last power level of test sequence #1 for the remaining time.

Power meter readings are periodically recorded every 100ms. A running average of this measured Tx power over 100 seconds is performed in the post-data processing to determine the 100s-time averaged power of WWAN Bands, the 30s-time averaged power of WLAN Bands.

For call drop, technology/band/antenna switch, and DSI switch tests, after the call is established, the callbox is set to request the EUT's Tx power at 0dBm for 100 seconds while simultaneously starting the 2nd test script runs at the same time to start recording the Tx power measured at EUT RF port using the power meter. After the initial 100 seconds since starting the Tx power recording, the callbox is set to request maximum power from the EUT for the rest of the test. Note that the call drop/re-establish, or technology/band/antenna switch or DSI switch is manually performed when the Tx power of EUT is at $P_{reserve}$ level. See Section 3.3 for detailed test procedure of call drop test, technology/band/antenna switch test and DSI switch test.

5.2 P_{limit} and P_{max} measurement results

The measured P_{limit} for all the selected radio configurations given in Table 4-2 are listed in below Table 5-1. P_{max} was also measured for radio configurations selected for testing time-varying Tx power transmission scenarios in order to generate test sequences following the test procedures in Section 3.1.

Table 5-1: Measured P_{limit} and P_{max} of selected radio configurations

Test case #	Test scenario	Band	Modulation	Gap (mm)	Antenna	DSI	Channel	Freq (MHz)	target pmax (dBm)	Plimit EFS setting(dBm)	measured pmax (dBm)	measured plimit (dBm)
1	Time-Varying Seq	WCDMA B2	RMC 12.2Kbps	0	Main	1	9400	1880	23.5	16.2	23.33	16.11
2		WCDMA B5	RMC 12.2Kbps	0	Main	1	4182	836.4	23.5	19	23.82	19.21
3		B41	20M_QPSK_1_0	0	Main	1	41490	2680	22.4	14.9	21.64	15.57
4		B71	20M_QPSK_1_0	0	Main	1	133297	680.5	23.5	21.9	23.39	21.71
5		FR1 n71	20M_BPSK_1_1	0	Main	1	136100	680.5	23.5	21.3	22.52	21.36
6		FR1 n77	100M_BPSK_1_1	0	Main	1	633332	3499.98	23	14	22.44	14.87
7	Call Drop	B41	20M_QPSK_1_0	0	Main	1	41490	2680	22.4	14.9	21.64	15.57
8	Tech/band switch	B41	20M_QPSK_1_0	0	Main	1	41490	2680	22.4	14.9	21.64	15.57
		WCDMA B2	RMC 12.2Kbps	0	Main	1	9400	1880	23.5	16.2	23.33	16.11
9	Change in Time Window (100-60-100s)	B71	20M_QPSK_1_0	0	Main	1	133297	680.5	23.5	21.9	23.39	21.71
		B48	20M_QPSK_1_0	0	Main	1	56640	3690	19	13.8	18.93	13.83
10	Change in Time Window (60-100-60s)	B48	20M_QPSK_1_0	0	Main	1	56640	3690	19	13.8	18.93	13.83
		B71	20M_QPSK_1_0	0	Main	1	133297	680.5	23.5	21.9	23.39	21.71

5.3 Time-varying Tx power measurement results

The measurement setup is shown in Figures 5-1(a) and 5-1(c). The purpose of the time-varying Tx power measurement is to demonstrate the effectiveness of power limiting enforcement and that the time-averaged Tx power when represented in time-averaged 1gSAR or 10gSAR values does not exceed FCC limit as shown in Eq. (1a) and (1b), rewritten below:

$$1g_or_10gSAR(t) = \frac{conducted_Tx_power(t)}{conducted_Tx_power_P_{limit}} * 1g_or_10gSAR_P_{limit} \quad \text{(1a)}$$

$$\frac{\frac{1}{T_{SAR}}\int_{t-T_{SAR}}^{t} 1g_or_10gSAR(t)dt}{FCC\ SAR\ limit} \leq 1$$

(1b)

where, $conducted_Tx_power(t)$, $conducted_Tx_power_P_{limit}$, and $1g_or_10gSAR_P_{limit}$ correspond to the measured instantaneous conducted Tx power, measured conducted Tx power at P_{limit}, and measured *1gSAR* and *10gSAR* values at P_{limit} reported in Part 1 test (listed in Table 4-2 of this report as well).

Following the test procedure in Section 3.3, the conducted Tx power measurement for all selected configurations are reported in this section. In all the conducted Tx power plots, the dotted line represents the requested power by callbox (test sequence 1 or test sequence 2), the blue curve represents the instantaneous conducted Tx power measured using power meter, the green curve represents time-averaged power and red line represents the conducted power limit that corresponds to FCC limit of 1.6 W/kg for 1gSAR or 4.0 W/kg for 10gSAR.

Similarly, in all the 1g or 10gSAR plots (when converted using Eq. (1a)), the green curve represents the 100s/60s-time averaged 1gSAR or 10gSAR value calculated based on instantaneous 1gSAR or 10gSAR; and the red line limit represents the FCC limit of 1.6 W/kg for 1gSAR or 4.0 W/kg for 10gSAR.

The power limiting enforcement is effective in all the tests, and the time-averaged 1gSAR does not exceed the SAR design target + device uncertainty for all the tested technologies/bands. Therefore, Qualcomm Smart Transmit time averaging feature is validated.

WCDMA Band 2

Test result for test sequence 1:

Above time-averaged conducted Tx power is converted/calculated into time-averaged 1gSAR using Equation (1a) and plotted below to demonstrate that the time-averaged 1gSAR versus time does not exceed the FCC limit of 1.6 W/kg for 1gSAR:

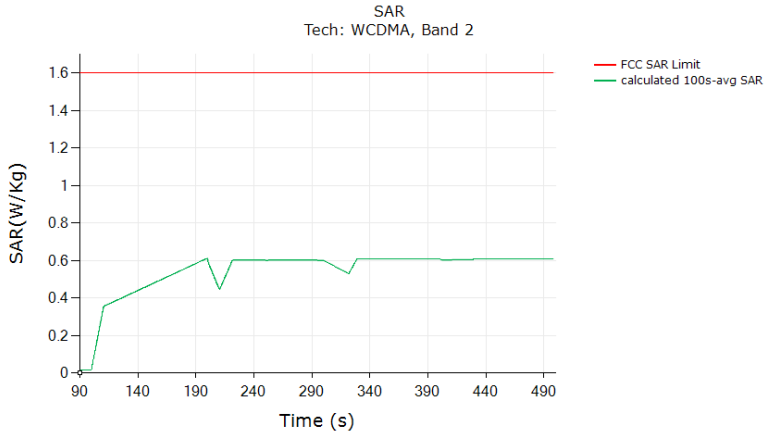

	(W/kg)
1gSAR limit	1.6
Max time averaged 1gSAR (green curve)	0.612
Validated	

Test result for test sequence 2:

Above time-averaged conducted Tx power is converted/calculated into time-averaged 1gSAR using Equation (1a) and plotted below to demonstrate that the time-averaged 1gSAR versus time does not exceed the FCC limit of 1.6W/kg for 1gSAR:

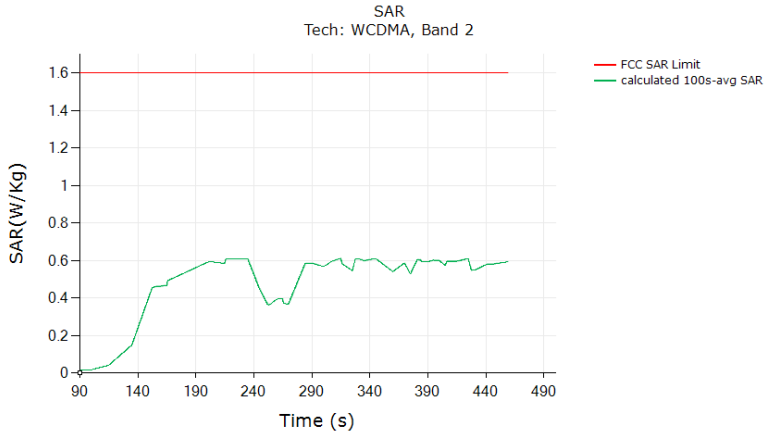

	(W/kg)
1gSAR limit	1.6
Max time averaged 1gSAR (green curve)	0.611
Validated	

WCDMA Band 5

Test result for test sequence 1:

Above time-averaged conducted Tx power is converted/calculated into time-averaged 1gSAR using Equation (1a) and plotted below to demonstrate that the time-averaged 1gSAR versus time does not exceed the FCC limit of 1.6 W/kg for 1gSAR:

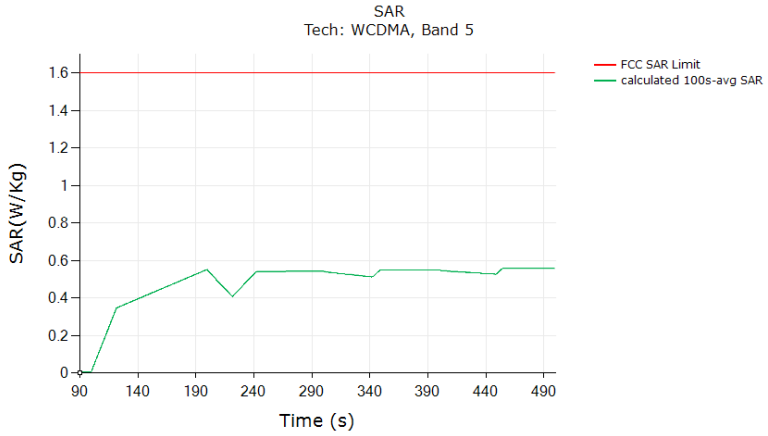

	(W/kg)
1gSAR limit	1.6
Max time averaged 1gSAR (green curve)	0.558
Validated	

Test result for test sequence 2:

Above time-averaged conducted Tx power is converted/calculated into time-averaged 1gSAR using Equation (1a) and plotted below to demonstrate that the time-averaged 1gSAR versus time does not exceed the FCC limit of 1.6W/kg for 1gSAR:

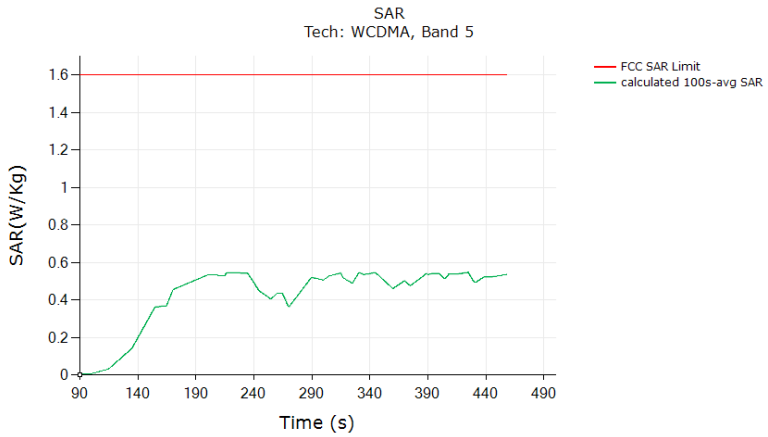

	(W/kg)
1gSAR limit	1.6
Max time averaged 1gSAR (green curve)	0.547
Validated	

LTE Band 41

Test result for test sequence 1:

Above time-averaged conducted Tx power is converted/calculated into time-averaged 1gSAR using Equation (1a) and plotted below to demonstrate that the time-averaged 1gSAR versus time does not exceed the FCC limit of 1.6 W/kg for 1gSAR:

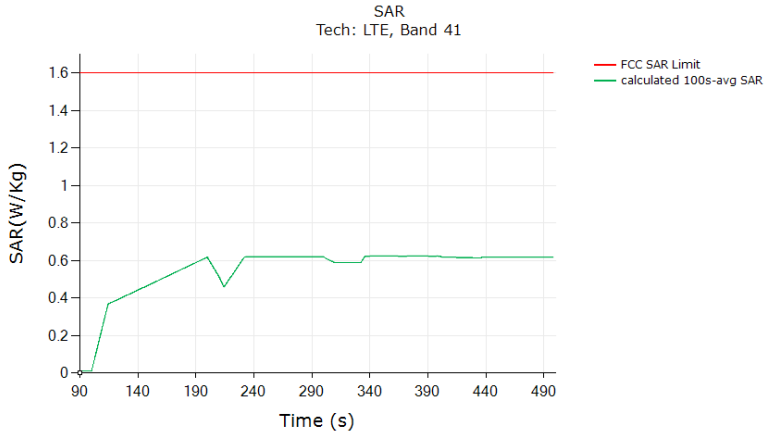

	(W/kg)
1gSAR limit	1.6
Max time averaged 1gSAR (green curve)	0.623
Validated	

Test result for test sequence 2:

Above time-averaged conducted Tx power is converted/calculated into time-averaged 1gSAR using Equation (1a) and plotted below to demonstrate that the time-averaged 1gSAR versus time does not exceed the FCC limit of 1.6W/kg for 1gSAR:

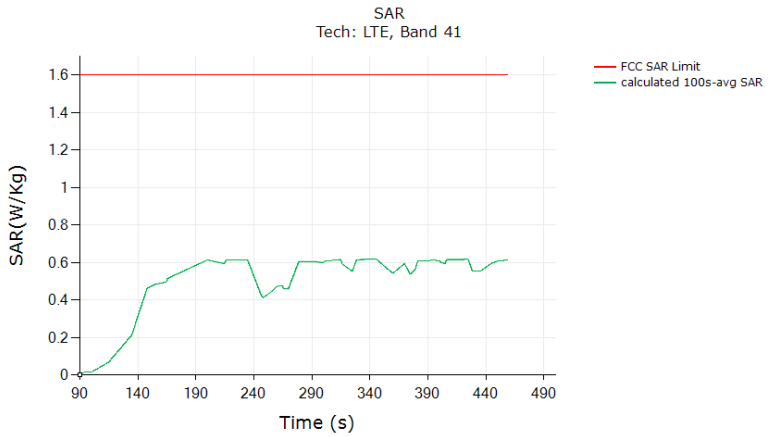

	(W/kg)
1gSAR limit	1.6
Max time averaged 1gSAR (green curve)	0.617
Validated	

LTE Band 71

Test result for test sequence 1:

Above time-averaged conducted Tx power is converted/calculated into time-averaged 1gSAR using Equation (1a) and plotted below to demonstrate that the time-averaged 1gSAR versus time does not exceed the FCC limit of 1.6 W/kg for 1gSAR:

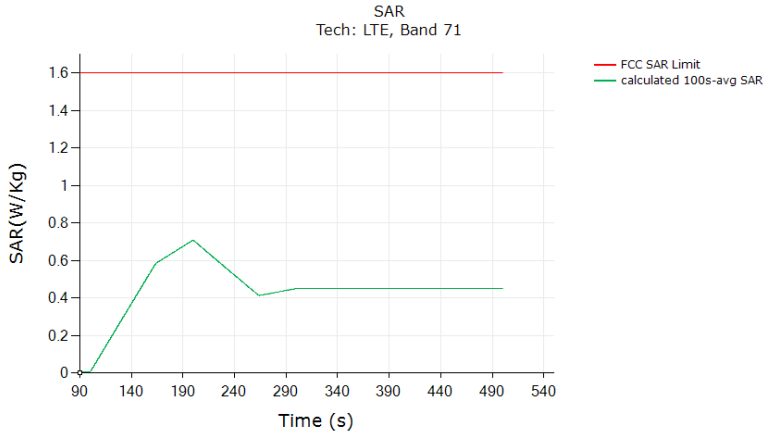

	(W/kg)
1gSAR limit	1.6
Max time averaged 1gSAR (green curve)	0.709
Validated	

Test result for test sequence 2:

Above time-averaged conducted Tx power is converted/calculated into time-averaged 1gSAR using Equation (1a) and plotted below to demonstrate that the time-averaged 1gSAR versus time does not exceed the FCC limit of 1.6W/kg for 1gSAR:

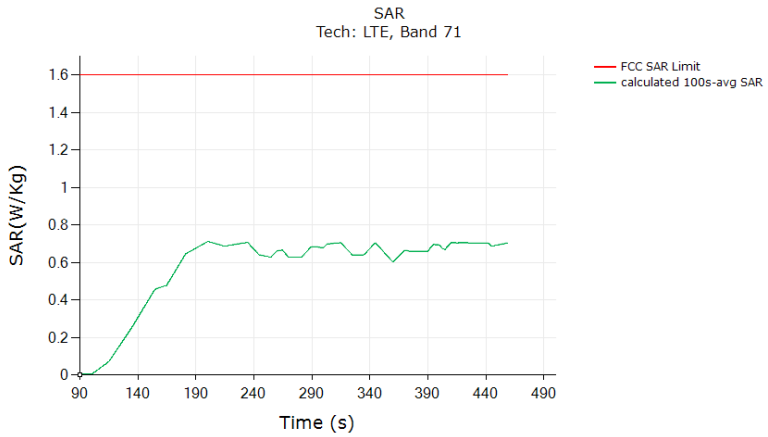

	(W/kg)
1gSAR limit	1.6
Max time averaged 1gSAR (green curve)	0.712
Validated	

FR1 n71

Test result for test sequence 1:

Above time-averaged conducted Tx power is converted/calculated into time-averaged 1gSAR using Equation (1a) and plotted below to demonstrate that the time-averaged 1gSAR versus time does not exceed the FCC limit of 1.6 W/kg for 1gSAR:

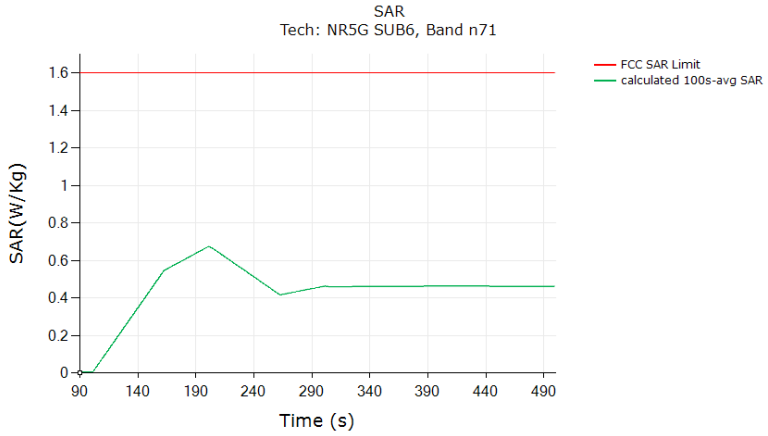

	(W/kg)
1gSAR limit	1.6
Max time averaged 1gSAR (green curve)	0.675
Validated	

Test result for test sequence 2:

Above time-averaged conducted Tx power is converted/calculated into time-averaged 1gSAR using Equation (1a) and plotted below to demonstrate that the time-averaged 1gSAR versus time does not exceed the FCC limit of 1.6W/kg for 1gSAR:

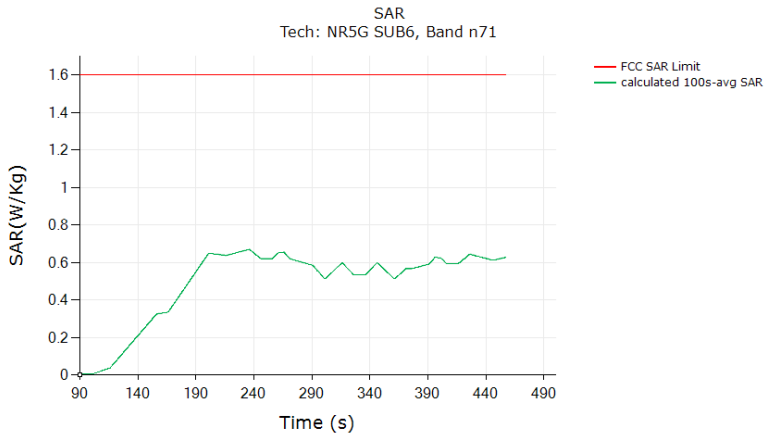

	(W/kg)
1gSAR limit	1.6
Max time averaged 1gSAR (green curve)	0.670
Validated	

FR1 n77

Test result for test sequence 1:

Above time-averaged conducted Tx power is converted/calculated into time-averaged 1gSAR using Equation (1a) and plotted below to demonstrate that the time-averaged 1gSAR versus time does not exceed the FCC limit of 1.6 W/kg for 1gSAR:

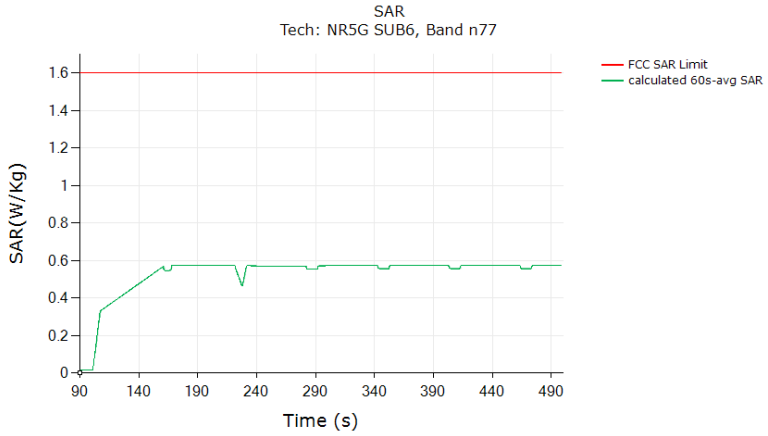

	(W/kg)
1gSAR limit	1.6
Max time averaged 1gSAR (green curve)	0.575
Validated	

Test result for test sequence 2:

Above time-averaged conducted Tx power is converted/calculated into time-averaged 1gSAR using Equation (1a) and plotted below to demonstrate that the time-averaged 1gSAR versus time does not exceed the FCC limit of 1.6W/kg for 1gSAR:

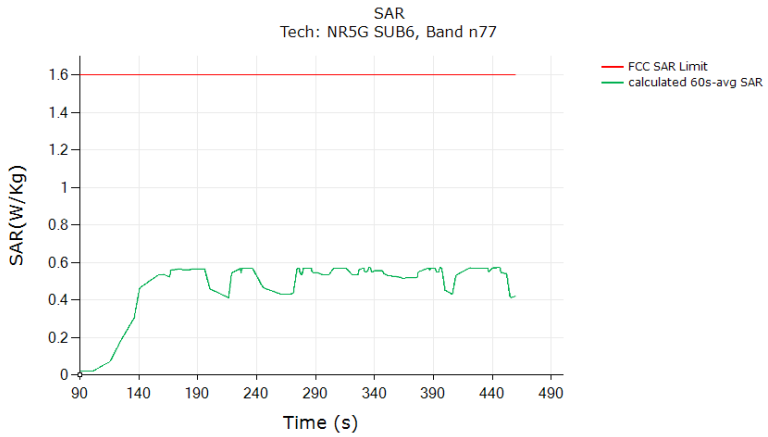

	(W/kg)
1gSAR limit	1.6
Max time averaged 1gSAR (green curve)	0.573
Validated	

5.4 Change in Call Test Results

This test was measured with with callbox requesting maximum power. The call drop was manually performed when the EUT is transmitting at $P_{reserve}$ level as shown in the plot below (dotted black region). The measurement setup is shown in Figure 5-1. The detailed test procedure is described in Section 3.3.2.

Call drop test result:

Above time-averaged conducted Tx power is converted/calculated into time-averaged 1gSAR using Equation (1a) and plotted below to demonstrate that the time-averaged 1gSAR versus time does not exceed the FCC limit of 1.6 W/kg for 1gSAR:

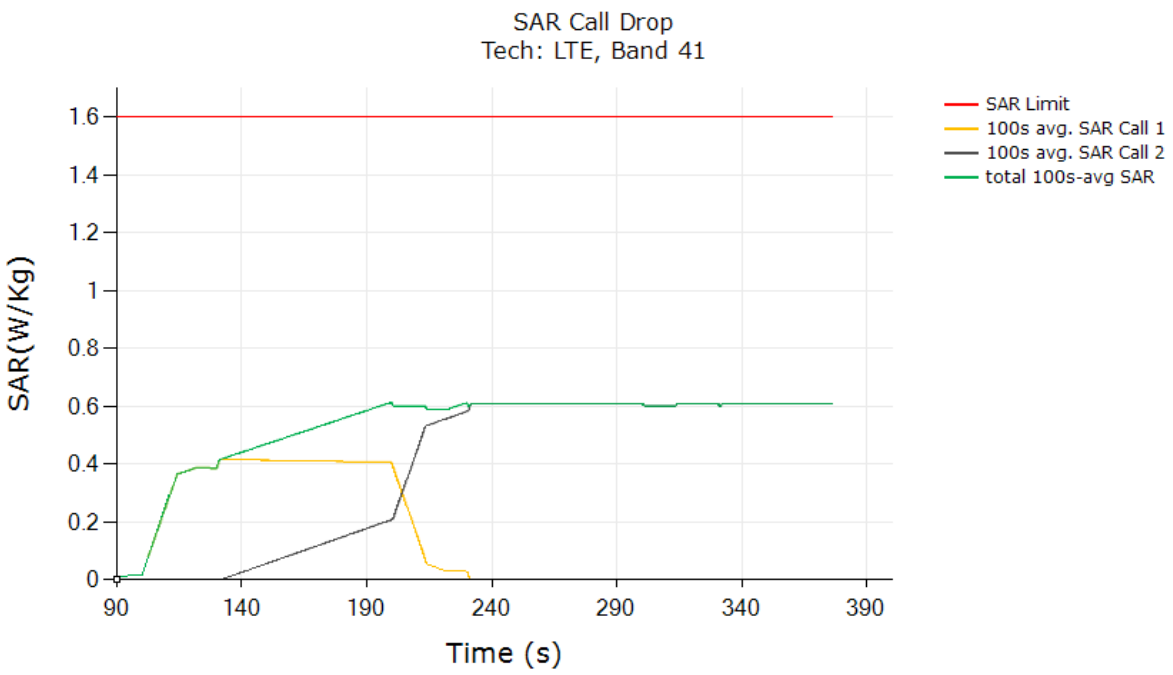

	(W/kg)
1gSAR limit	1.6
Max time averaged 1gSAR (green curve)	0.613
Validated	

The test result validated the continuity of power limiting in Change in Call scenario.

5.5 Change in technology/band test results

This test was conducted with callbox requesting maximum power, and with antenna & technology switch. Following procedure detailed in Section 3.3.3, and using the measurement setup shown in Figure 5-1(a) and (c), the technology/band switch was performed when the EUT is transmitting at $P_{reserve}$ level as shown in the plot below (dotted black region).

Test result for change in technology/band:

All the time-averaged conducted Tx power measurement results were converted into time-averaged normalized SAR values using Equation (6a), (6b) and (6c), and plotted below to demonstrate that the normalized time-averaged RF exposure does not exceed the FCC limit of 1.0:

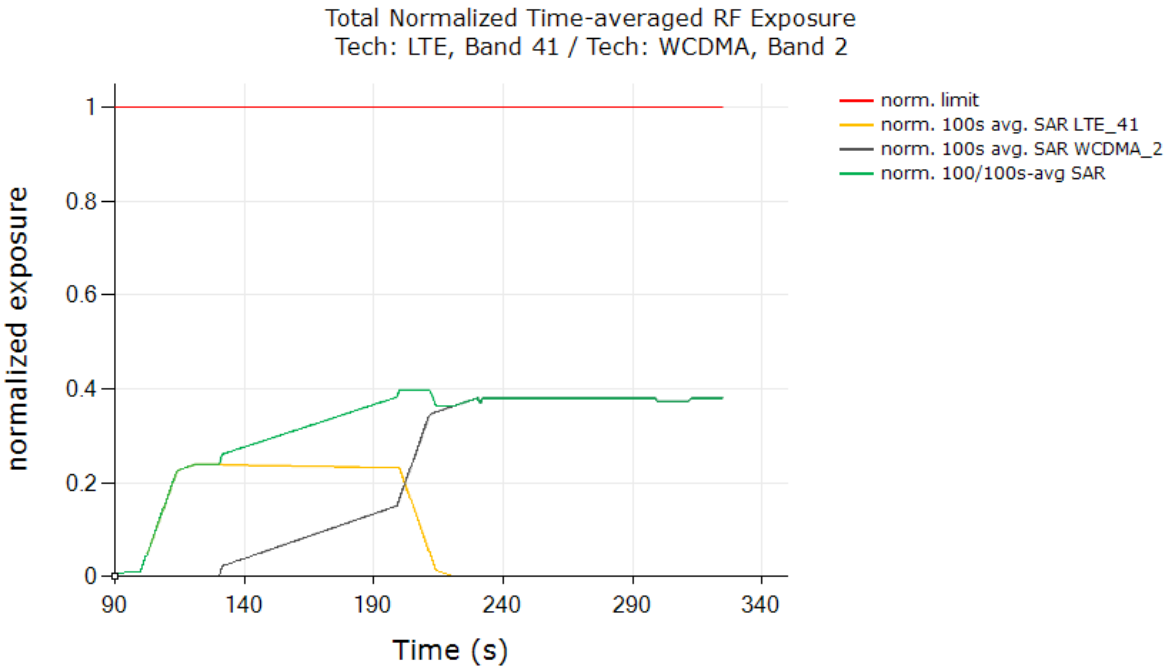

	Exposure Ratio
Normalized Exposure Ratio limit	1.0
Max time averaged normalized Exposure Ratio (green curve)	0.398
Validated	

The test result validated the continuity of power limiting in technology/band switch scenario.

5.6 Change in Time window / antenna switch test results

Test case 1: transition from LTE FDD to LTE TDD (i.e., 100s to 60s), then back to LTE FDD

Test result for change in time-window (from 100s to 60s to 100s):

All the conducted Tx power measurement results were converted into time-averaged normalized SAR values using Equation (7a), (7b) and (7c), and plotted below to demonstrate that the normalized time-averaged RF exposure does not exceed the FCC limit of 1.0. Equation (7a) is used to convert the Tx power of device to obtain 100s-averaged normalized SAR in LTE FDD as shown in black curve. Similarly, equation (7b) is used to obtain 60s-averaged normalized SAR in LTE TDD as shown in orange curve. Equation (7c) is used to obtain total time-averaged normalized SAR as shown in green curve (i.e., sum of black and orange curves).

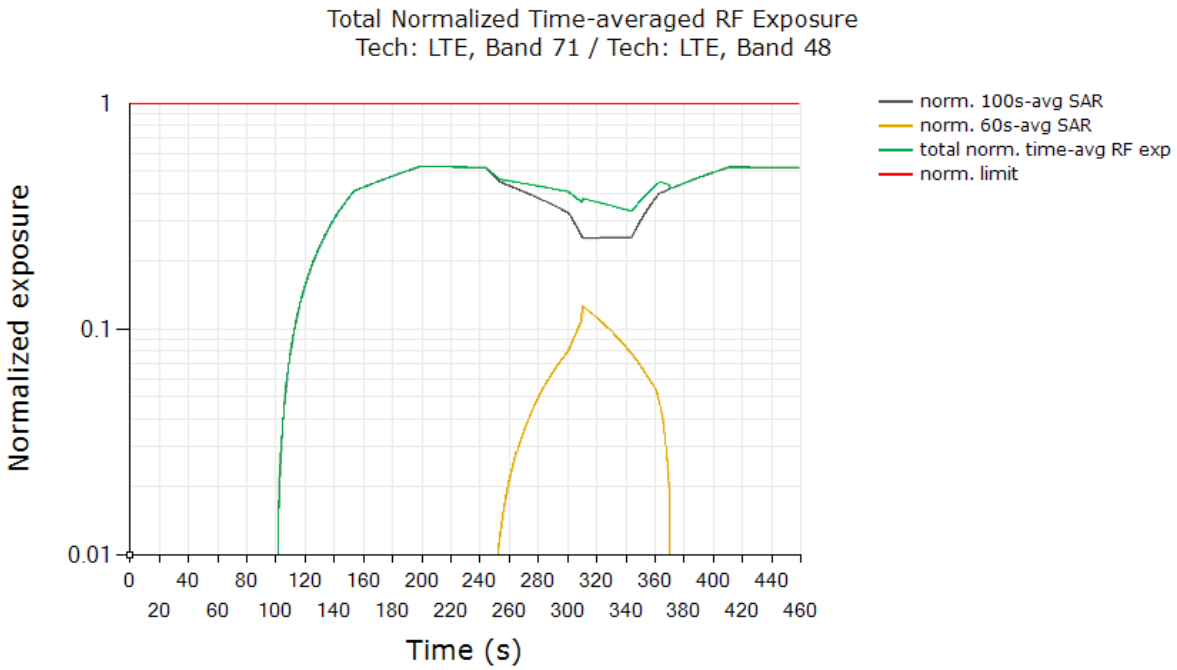

	Exposure Ratio
Normalized Exposure Ratio	1.0
Max time averaged normalized Exposure Ratio (green curve)	0.528
Validated	

Plot Notes:

In this test, with a maximum normalized SAR of 0.528 being ≤ 0.75 (=0.95/1.6 total uncertainty), the above test result validated the continuity of power limiting in time-window switch scenario.

Test case 2: transition from LTE TDD to LTE FDD (i.e., 60s to 100s), then back to LTE TDD

Test result for change in time-window (from 60s to 100s to 60s):

All the conducted Tx power measurement results were converted into time-averaged normalized SAR values using Equation (7a), (7b) and (7c), and plotted below to demonstrate that the normalized time-averaged RF exposure does not exceed the FCC limit of 1.0. Equation (7a) is used to convert the Tx power of device to obtain 60s-averaged normalized SAR in LTE TDD as shown in black curve. Similarly, equation (7b) is used to obtain 100s-averaged normalized SAR in LTE FDD as shown in orange curve. Equation (7c) is used to obtain total time-averaged normalized SAR as shown in green curve (i.e., sum of black and orange curves).

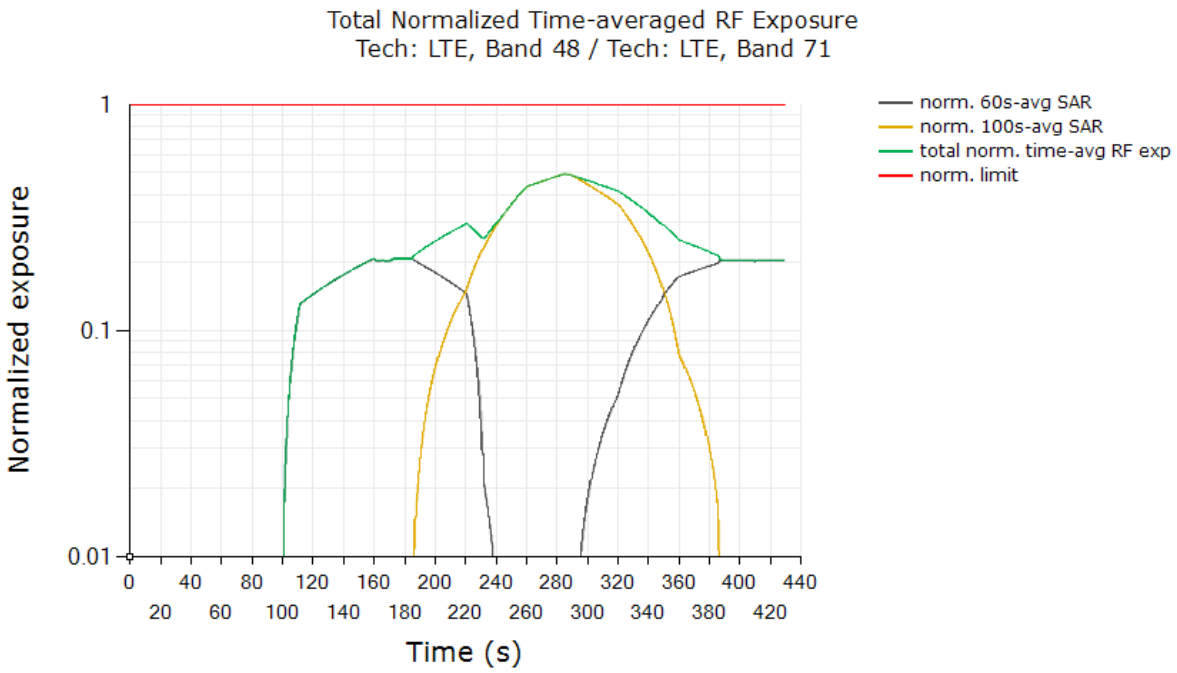

	Exposure Ratio
Normalized Exposure Ratio limit	1.0
Max time averaged normalized Exposure Ratio (green curve)	0.493
Validated	

Plot Notes:

In this test, with a maximum normalized SAR of 0.493 being ≤ 0.75 (=0.95/1.6 + total uncertainty), the above test result validated the continuity of power limiting in time-window switch scenario.

6. SAR Test Results for Sub-6 Smart Transmit Feature Validation

6.1 Measurement setup

The measurement setup is similar to normal SAR measurements (see Appendix E). The difference in SAR measurement setup for time averaging feature validation is that the callbox is signaling in close loop power control mode (instead of requesting maximum power in open loop control mode) and callbox is connected to the PC using GPIB so that the test script executed on PC can send GPIB commands to control the callbox's requested power over time (test sequence). The same test script used in conducted setup for time-varying Tx power measurements is also used in this section for running the test sequences during SAR measurements, and the recorded values from the disconnected power meter by the test script were discarded.

As mentioned in Section 3.4, for EUT to follow TPC command sent from the callbox wirelessly, the "path loss" between callbox antenna and the EUT needs to be very well calibrated. Since the SAR chamber is in uncontrolled environment, precautions must be taken to minimize the environmental influences on "path loss". Similarly, in the case of time-varying SAR measurements in 5G NR (with LTE as anchor), "path loss" between callbox antenna and the EUT needs to be carefully calibrated for both LTE link as well as for 5G NR link.

The EUT is placed in worst-case position according to Table 4-2.

6.2 SAR measurement results for time-varying Tx power transmission scenario

Following Section 3.4 procedure, time-averaged SAR measurements are conducted using EX3DV4 probe at peak location of area scan over 500 seconds. cDASY6 system verification for SAR measurement is provided in Appendix C, and the associated SPEAG certificates are attached in Appendix D.

SAR probe integration times depend on the communication signal being tested. Integration times used by SPEAG for their probe calibrations can be downloaded from here (integration time is listed on the bottom of the first page for each tech):

https://www.speag.com/assets/downloads/services/cs/UIDSummary171205.pdf

Since the sampling rate used by cDASY6 for pointSAR measurements is not in user control, the number of points in 100s or 60s interval is determined from the scan duration setting in cDASY6 time-average pointSAR measurement by (100s or 60s / cDASY6_scan_duration * total number of pointSAR values recorded). Running average is performed over these number of points in excel spreadsheet to obtain 100s-/60s-averaged pointSAR.

Following Section 3.4, for each of selected technology/band (listed in Table 4-2):

1. With EUT set to peak mode, area scan is performed at P_{limit}, and time-averaged pointSAR measurements are conducted to determine the pointSAR at P_{limit} at peak location, denoted as $pointSAR_{Plimit}$.
2. With EUT set to intended Smart Transmit exposure mode, two more time-averaged pointSAR measurements are performed at the same peak location for test sequences 1 and 2.

To demonstrate compliance, all the pointSAR measurement results were converted into 1gSAR or 10gSAR values by using Equation (3a), rewritten below:

$$1g_or_10gSAR(t) = \frac{pointSAR(t)}{pointSAR_P_{limit}} * 1g_or_10gSAR_P_{limit} \qquad (3a)$$

where, $pointSAR(t)$, $pointSAR_P_{limit}$, and $1g_or_10gSAR_P_{limit}$ correspond to the measured instantaneous point SAR, measured point SAR at P_{limit} from above step 1 and 2, and measured *1gSAR* or 10gSAR values at P_{limit} obtained from Part 1 report and listed in Table 4-2 in Section 5.1 of this report.

The power limiting enforcement is effective in all the tests, and the time-averaged 1gSAR does not exceed the SAR design target + device uncertainty for all the tested technologies/bands. Therefore, Qualcomm Smart Transmit time averaging feature is validated.

Test case#	Test scenario	Band	Modulation	Test Position	Gap (mm)	Antenna	DSI	Channel	Freq (MHz)	target pmax (dBm)	Plimit EFS setting(dBm)	measured pmax (dBm)	measured plimit (dBm)	Part 1, SAR@Plimit 1-g SAR (W/kg)	Part2 Test Result: SAR (W/kg)
1	Time-Varying	WCDMA B2	RMC 12.2Kbps	Bottom Side	0	Main	1	9400	1880	23.5	16.2	23.33	16.11	0.664	0.61
2		WCDMA B5	RMC 12.2Kbps	Bottom Side	0	Main	1	4182	836.4	23.5	19	23.82	19.21	0.5	0.559
3		B41	20M_QPSK_1_0	Bottom Side	0	Main	1	41490	2680	22.4	14.9	21.64	15.57	0.555	0.623
4		B71	20M_QPSK_1_0	Bottom Side	0	Main	1	133297	680.5	23.5	21.9	23.39	21.71	0.813	0.707
5		FR1 n71	20M_BPSK_1_1	Bottom Side	0	Main	1	136100	680.5	23.5	21.3	22.52	21.36	0.661	0.675
6		FR1 n77	100M_BPSK_1_1	Bottom Side	0	Main	1	633332	3499.98	23	14	22.44	14.87	0.385	0.590

WCDMA Band 2 SAR test results

SAR test results for test sequence 1:

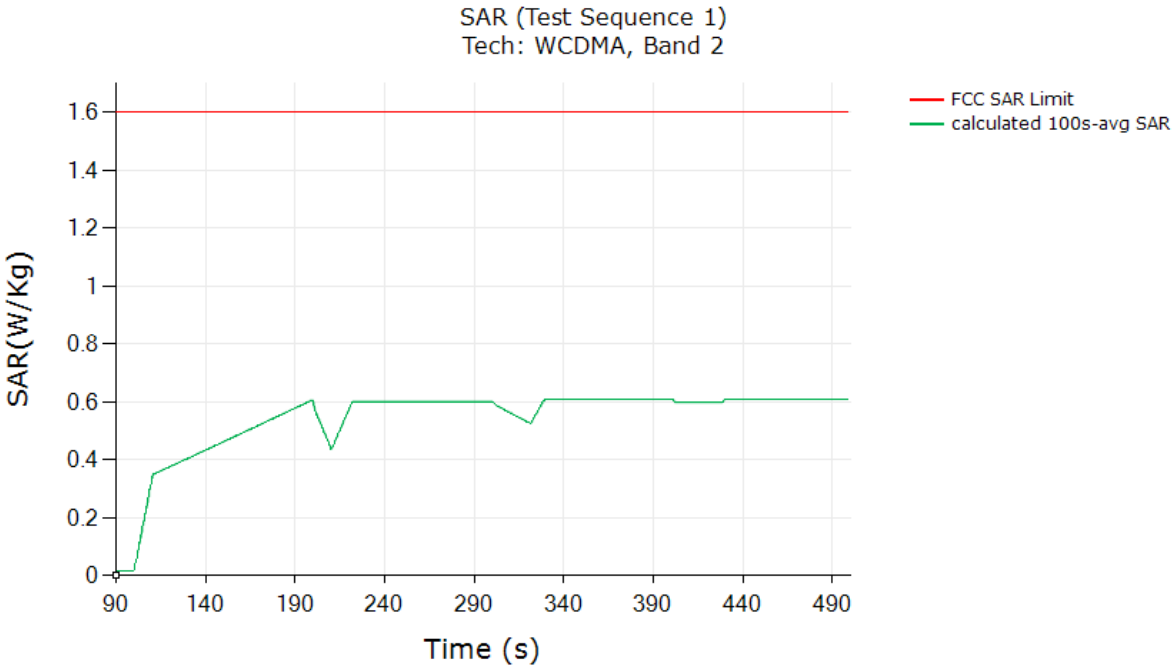

	(W/kg)
1gSAR limit	1.6
Max time averaged 1gSAR (green curve)	0.610
Validated	

SAR test results for test sequence 2:

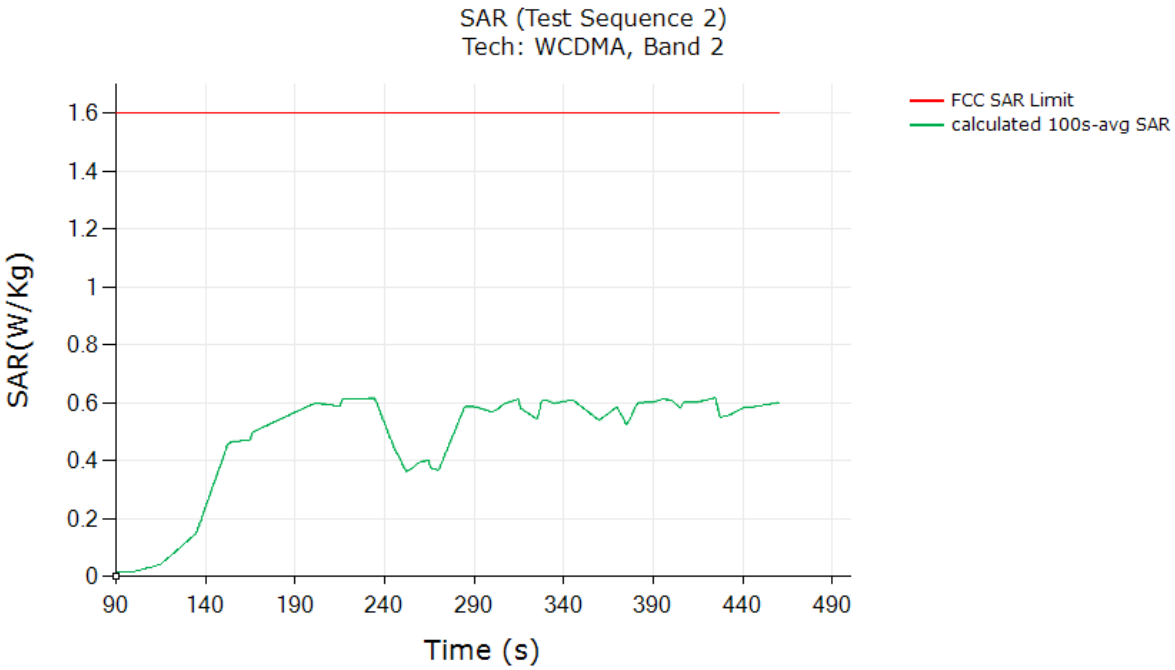

	(W/kg)
1gSAR limit	1.6
Max time averaged 1gSAR (green curve)	0.616
Validated	

WCDMA Band 5 SAR test results

SAR test results for test sequence 1:

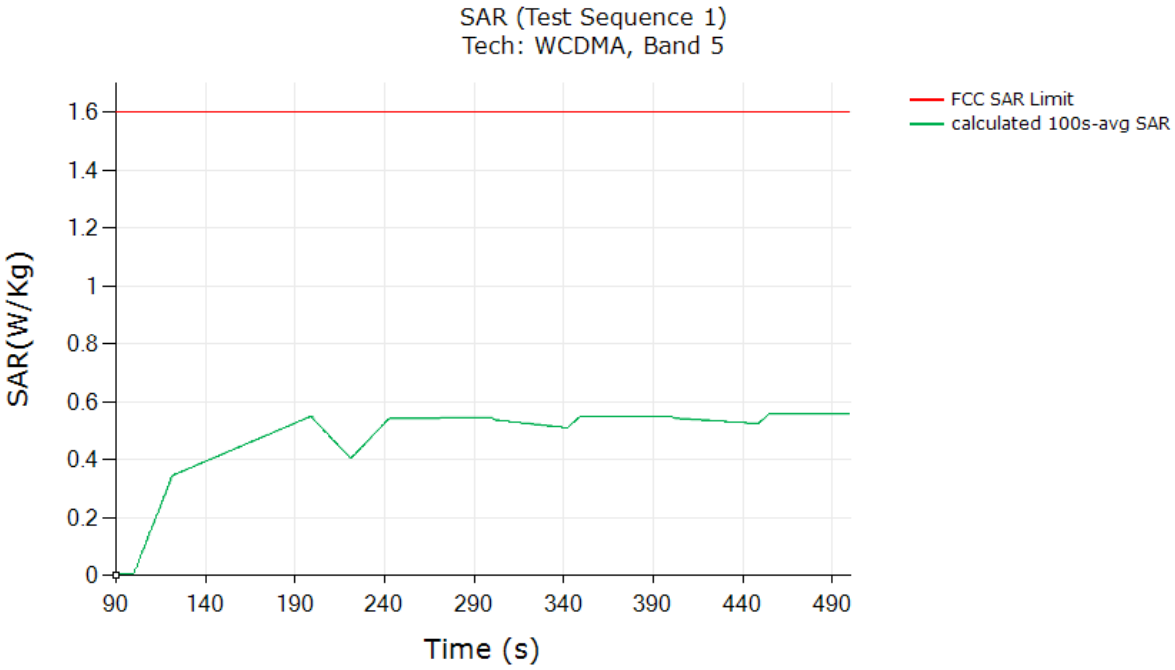

	(W/kg)
1gSAR limit	1.6
Max time averaged 1gSAR (green curve)	0.559
Validated	

SAR test results for test sequence 2:

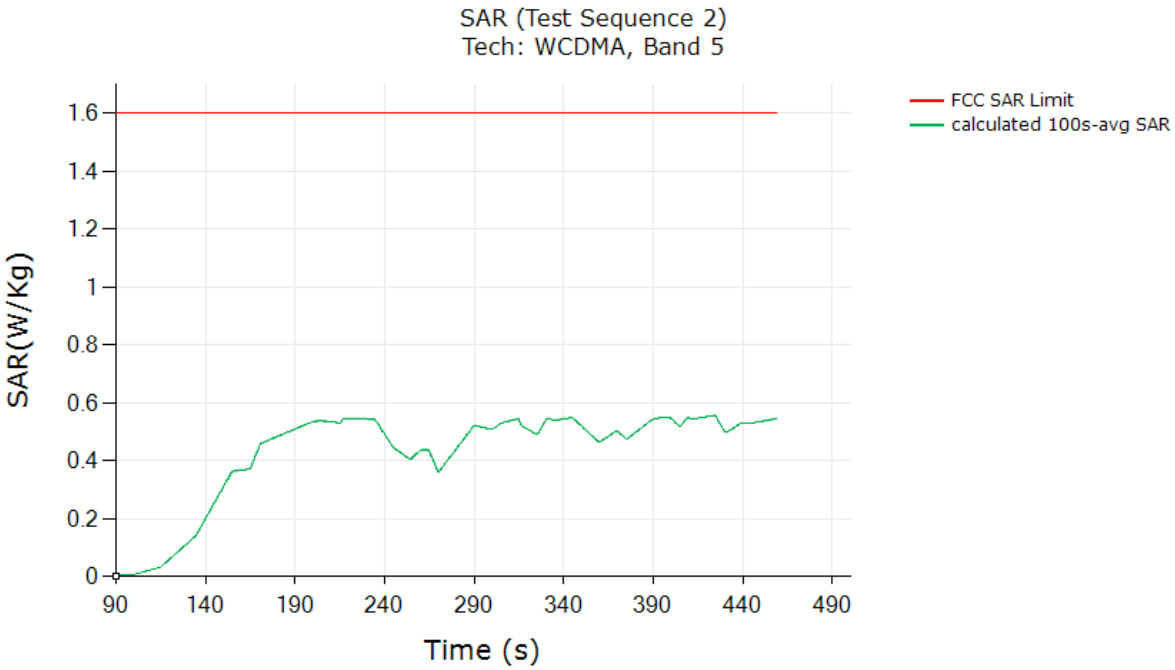

	(W/kg)
1gSAR limit	1.6
Max time averaged 1gSAR (green curve)	0.556
Validated	

LTE Band 41 SAR test results

SAR test results for test sequence 1:

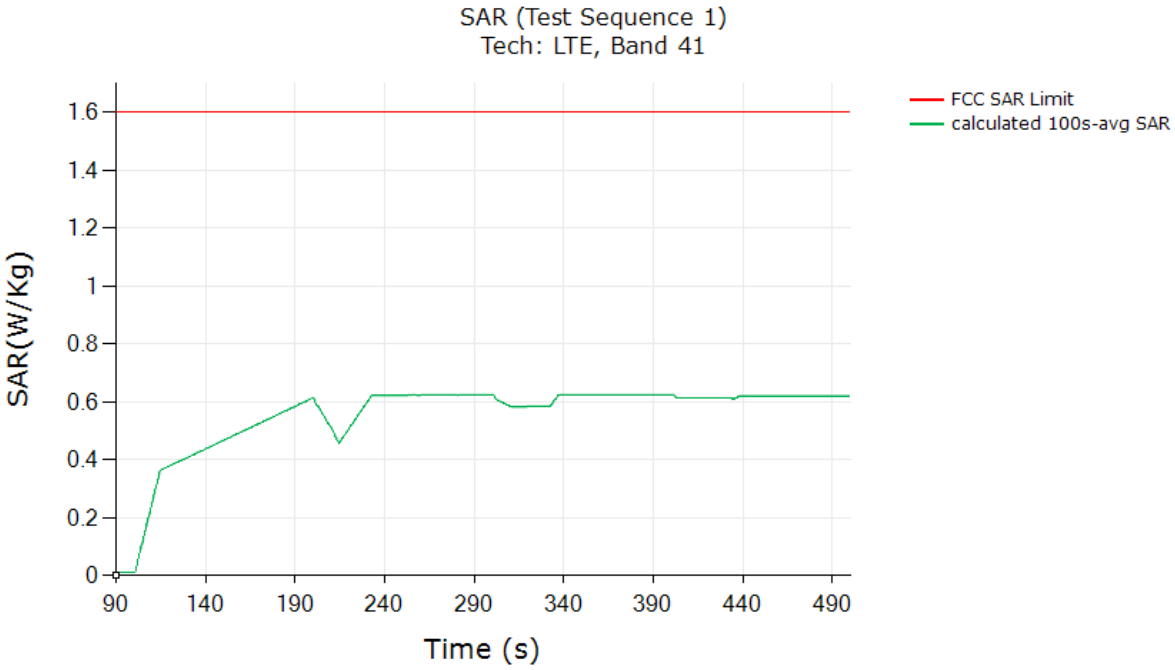

	(W/kg)
1gSAR limit	1.6
Max time averaged 1gSAR (green curve)	0.623
Validated	

SAR test results for test sequence 2:

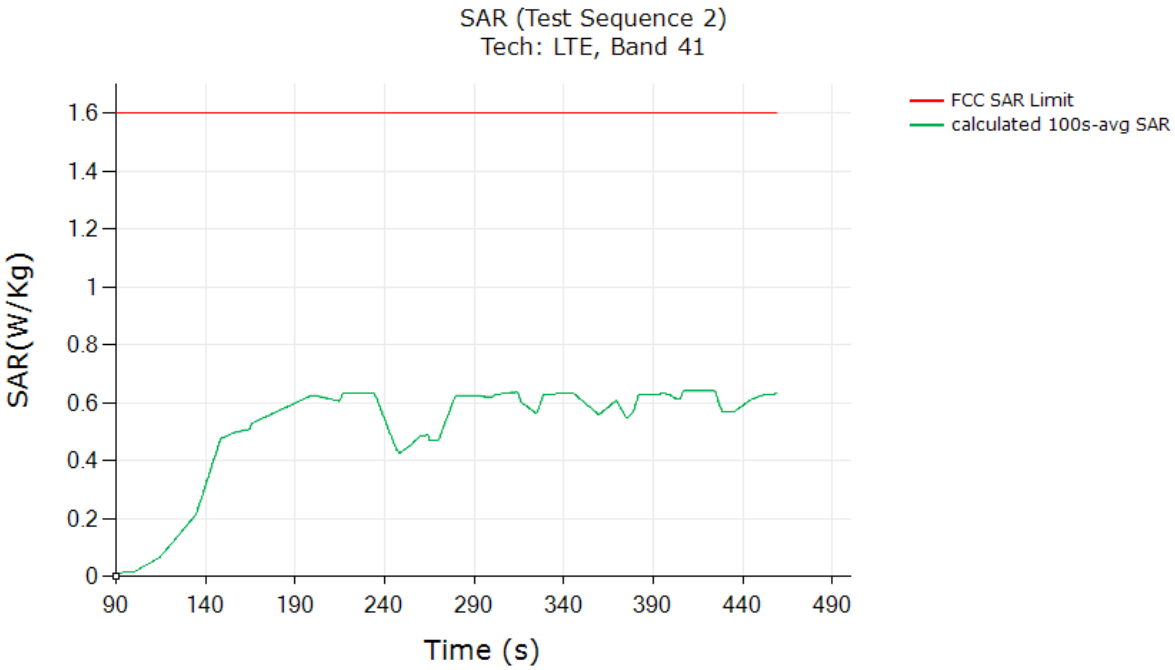

	(W/kg)
1gSAR limit	1.6
Max time averaged 1gSAR (green curve)	0.642
Validated	

LTE Band 71 SAR test results

SAR test results for test sequence 1:

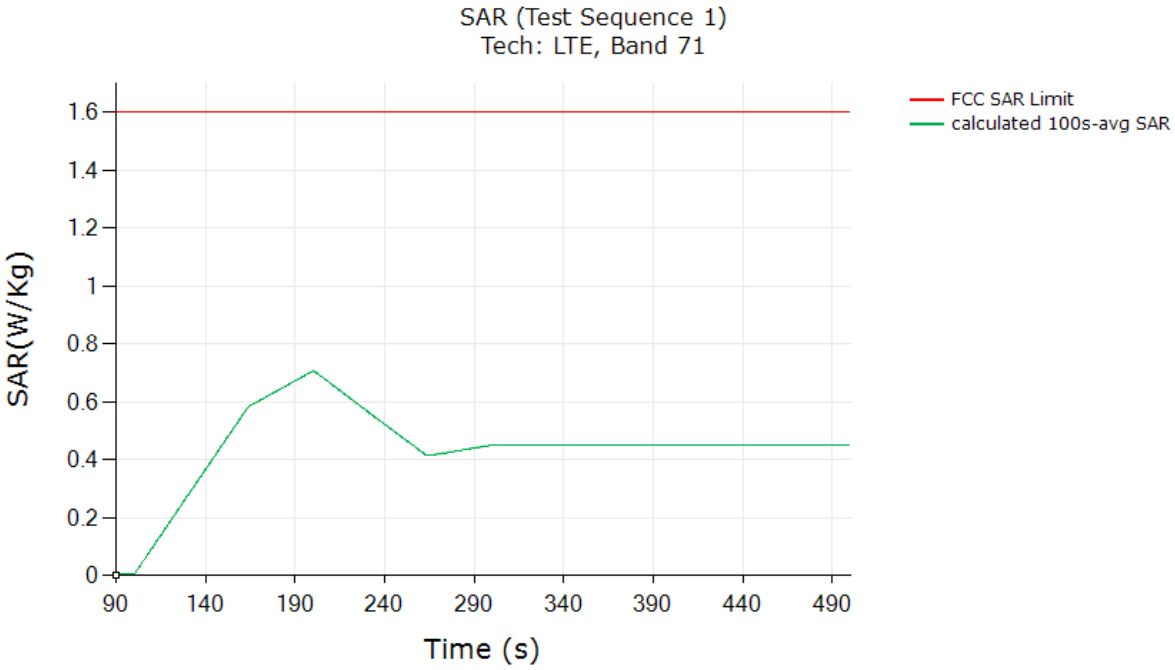

	(W/kg)
1gSAR limit	1.6
Max time averaged 1gSAR (green curve)	0.707
Validated	

SAR test results for test sequence 2:

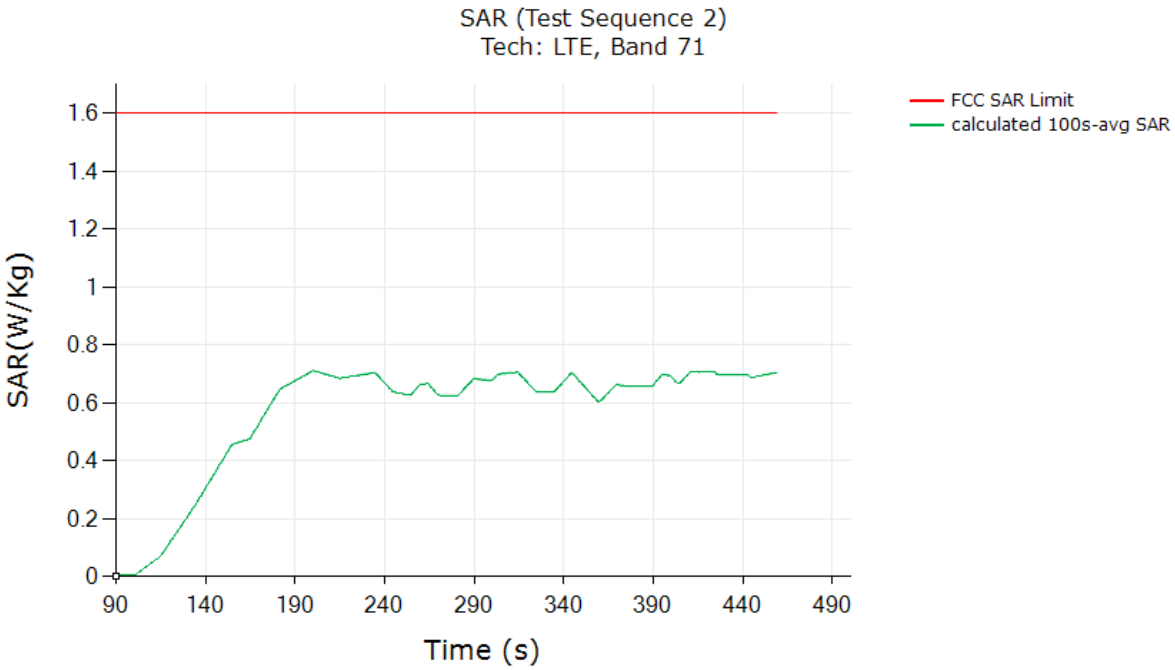

	(W/kg)
1gSAR limit	1.6
Max time averaged 1gSAR (green curve)	0.711
Validated	

FR1 n71 SAR test results

SAR test results for test sequence 1:

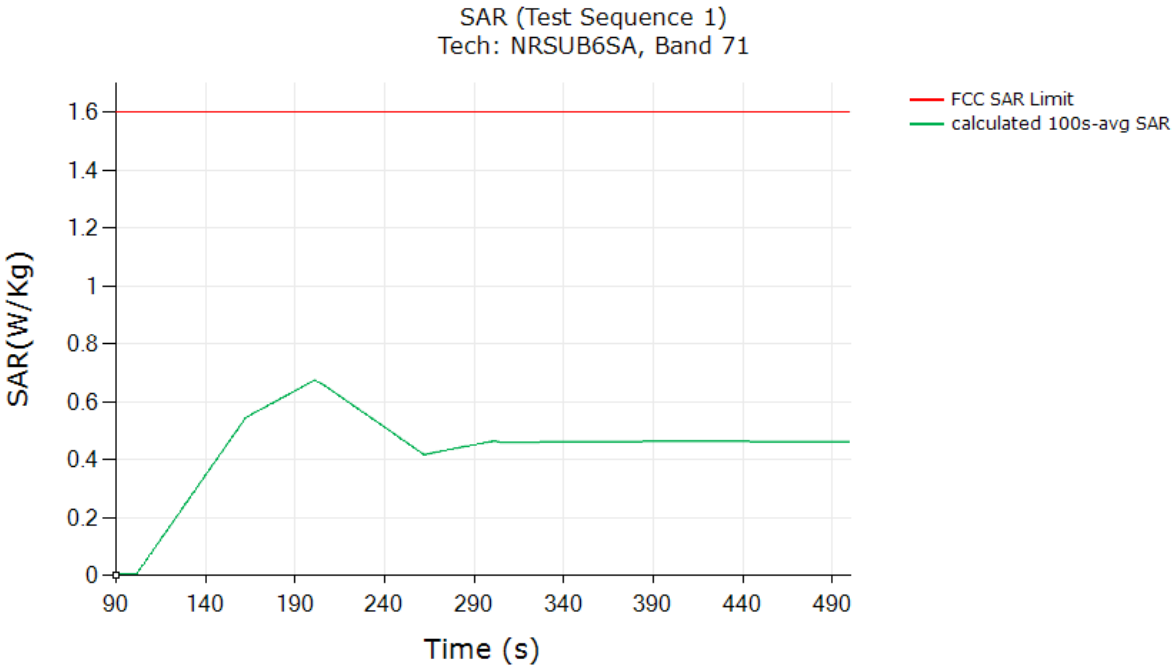

	(W/kg)
1gSAR limit	1.6
Max time averaged 1gSAR (green curve)	0.675
Validated	

SAR test results for test sequence 2:

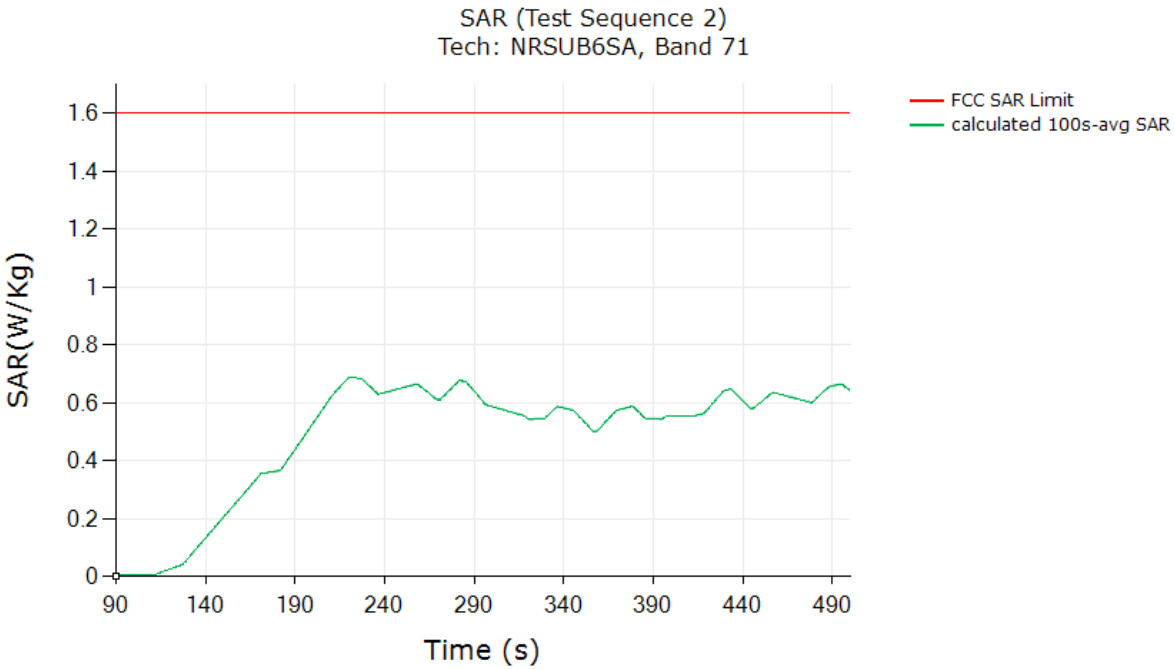

	(W/kg)
1gSAR limit	1.6
Max time averaged 1gSAR (green curve)	0.670
Validated	

FR1 n77 SAR test results

SAR test results for test sequence 1:

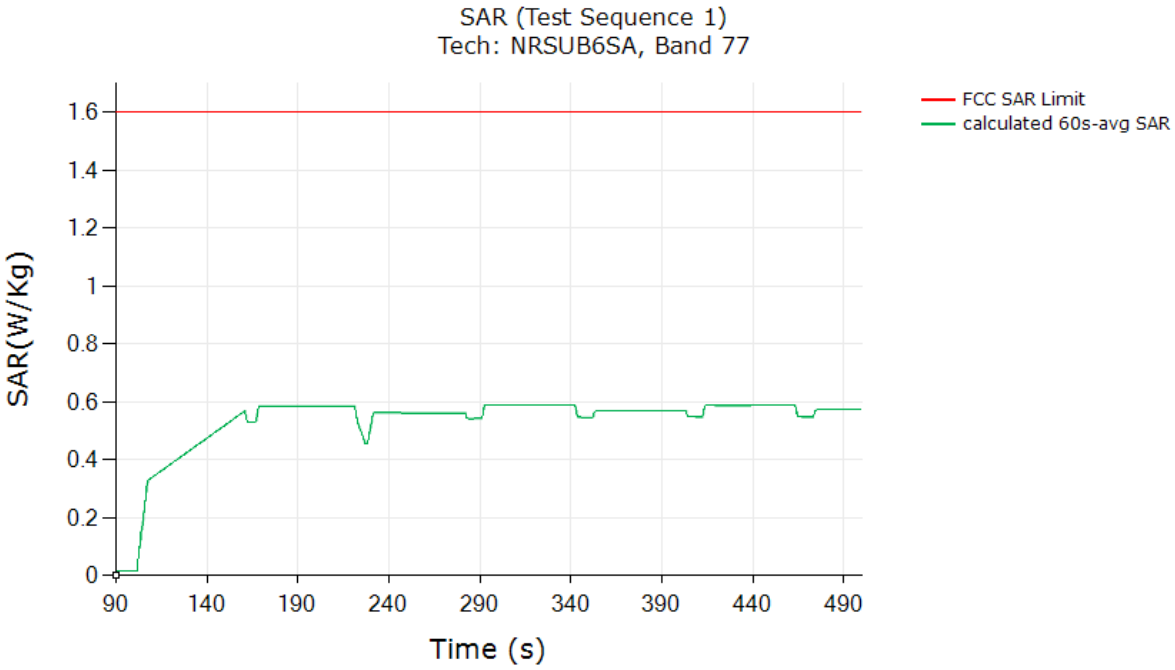

	(W/kg)
1gSAR limit	1.6
Max time averaged 1gSAR (green curve)	0.590
Validated	

SAR test results for test sequence 2:

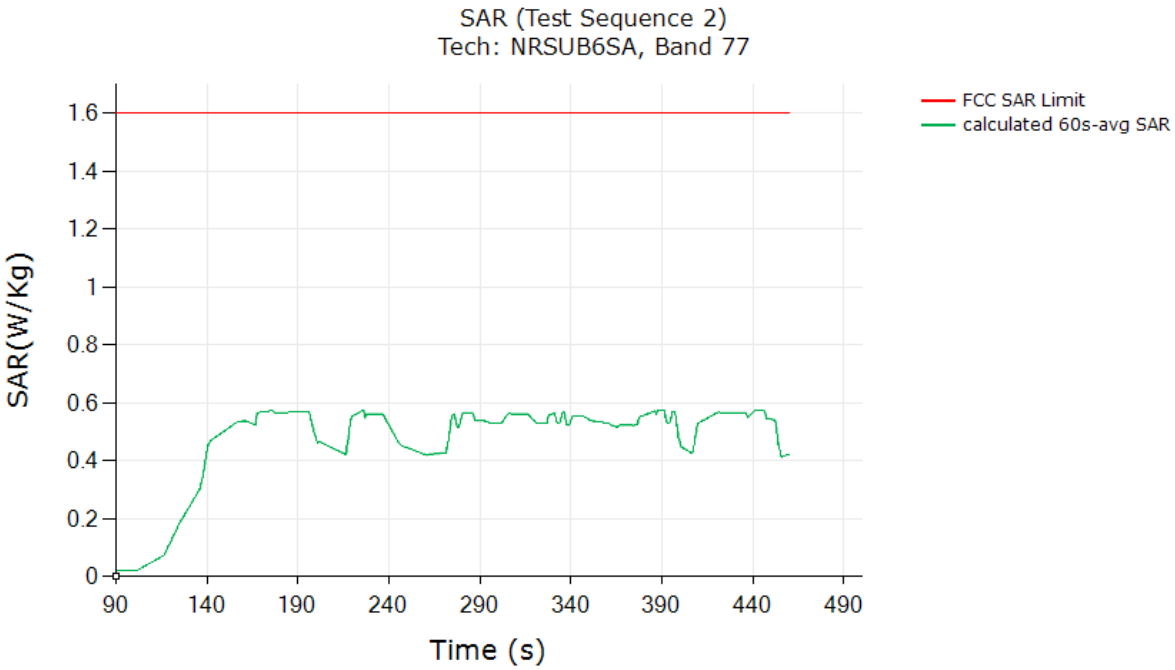

	(W/kg)
1gSAR limit	1.6
Max time averaged 1gSAR (green curve)	0.575
Validated	

7. Conclusions

Qualcomm Smart Transmit feature employed has been validated through the conducted/ radiated power measurement, as well as SAR measurement.
As demonstrated in this report, the power limiting enforcement is effective and the total normalized time-averaged RF exposure does not exceed 1.0 for all the transmission scenarios described in Section 2. Therefore, the EUT complies with FCC RF exposure requirement.

Appendix A. Test Sequences

1. Test sequence is generated based on below parameters of the EUT:
   a. Measured maximum power (P_{max})
   b. Measured Tx_power_at_SAR_design_target (P_{limit})
   c. Reserve_power_margin (dB)
      - $P_{reserve}$ (dBm) = measured P_{limit} (dBm) – Reserve_power_margin (dB)
   d. *SAR_time_window* (100s for FCC)
2. Test Sequence 1 Waveform:

   Based on the parameters above, the Test Sequence 1 is generated with one transition between high and low Tx powers. Here, high power = P_{max}; low power = $P_{max}/2$, and the transition occurs after 80 seconds at high power P_{max}. As long as the power enforcement is taking into effective during one 100s/60s time window, the validation test with this defined test sequence 1 is valid, otherwise, select other radio configuration (band/DSI within the same technology group) having lower P_{limit} for this test. The Test sequence 1 waveform is shown below:

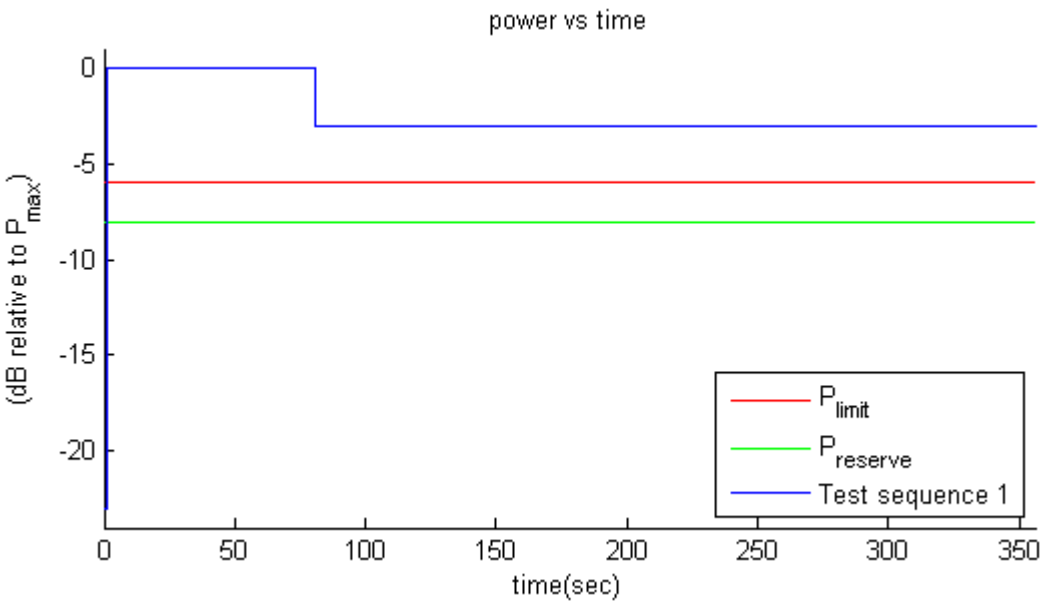

Figure A-1 Test sequence 1 waveform

3. Test Sequence 2 Waveform:

Based on the parameters in A-1, the Test Sequence 2 is generated as described in Table 10-1, which contains two 170 second-long sequences (yellow and green highlighted rows) that are mirrored around the center row of 20s, resulting in a total duration of 360 seconds:

Table A-1 Test Sequence 2

Time duration (seconds)	dB relative to P_{limit} or $P_{reserve}$
15	$P_{reserve} - 2$
20	P_{limit}
20	$(P_{limit} + P_{max})/2$ averaged in mW and rounded to nearest 0.1 dB step
10	$P_{reserve} - 6$
20	P_{max}
15	P_{limit}
15	$P_{reserve} - 5$
20	P_{max}
10	$P_{reserve} - 3$
15	P_{limit}
10	$P_{reserve} - 4$
20	$(P_{limit} + P_{max})/2$ averaged in mW and rounded to nearest 0.1 dB step
10	$P_{reserve} - 4$
15	P_{limit}
10	$P_{reserve} - 3$
20	P_{max}
15	$P_{reserve} - 5$
15	P_{limit}
20	P_{max}
10	$P_{reserve} - 6$
20	$(P_{limit} + P_{max})/2$ averaged in mW and rounded to nearest 0.1 dB step
20	P_{limit}
15	$P_{reserve} - 2$

The Test Sequence 2 waveform is shown in Figure A-2.

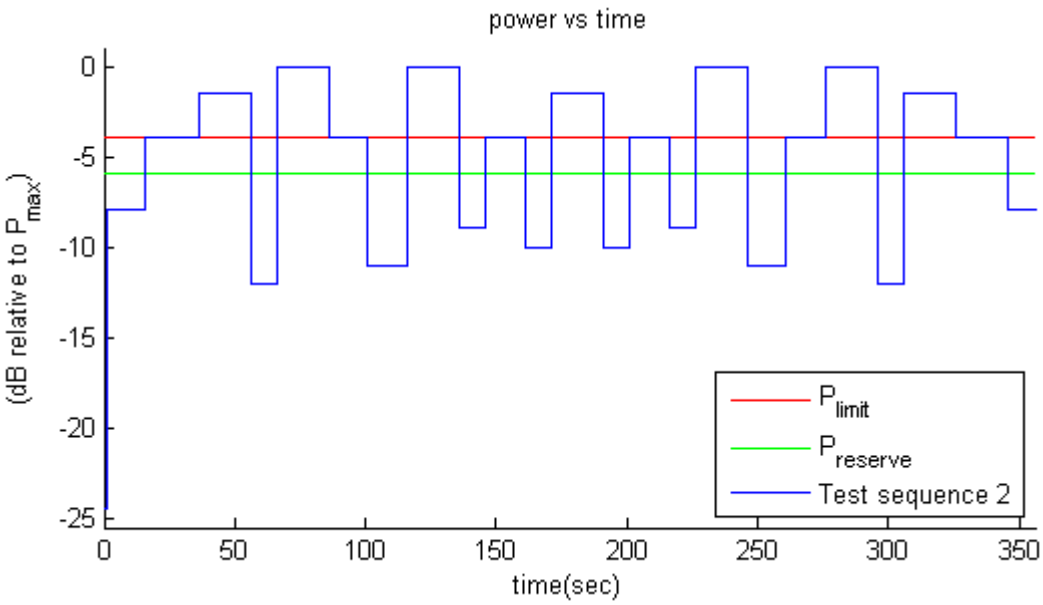

Appendix B. cDASY6 System Verification

1 The system to be used for the near field power density measurement

- SPEAG DASY6 system
- SPEAG cDASY6 5G module software
- 5G Phantom cover

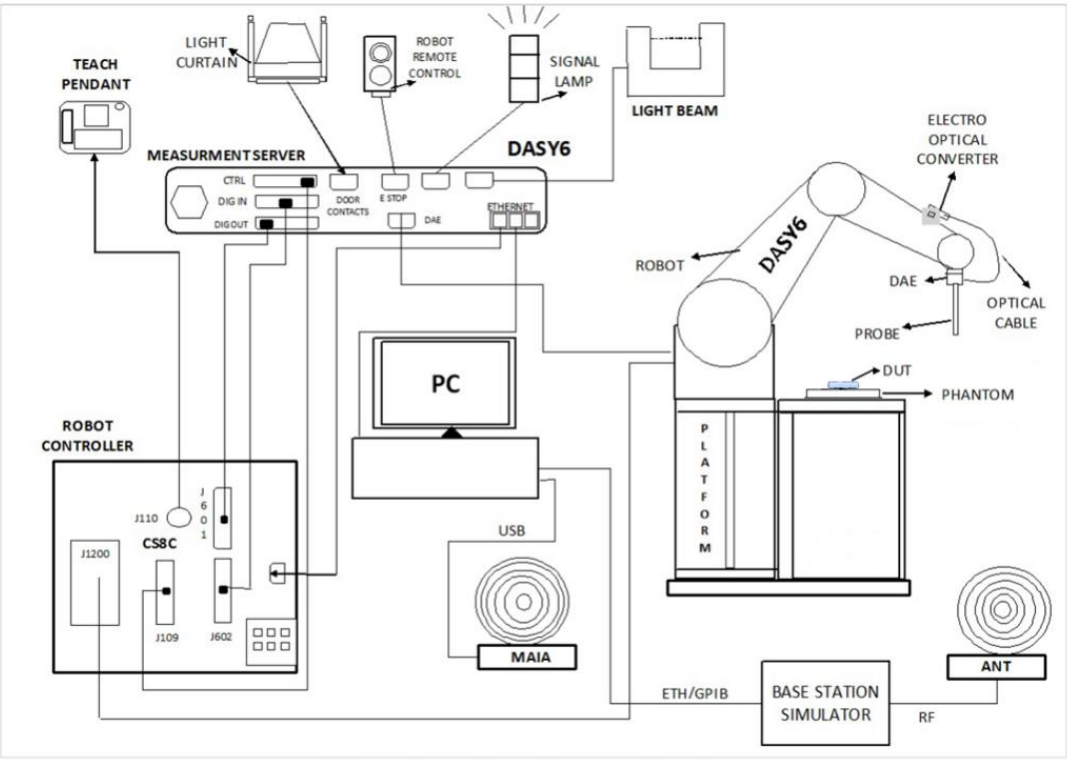

2 Test Side Location

Sporton Lab and below test site location are accredited to ISO 17025 by Taiwan Accreditation Foundation (TAF code: 3786) and the FCC designation No. TW3786 under the FCC 2.948(e) by Mutual Recognition Agreement (MRA) in FCC test.

Test Site	SPORTON INTERNATIONAL INC. Wensan Laboratory
Test Site Location	TW3786 No.58, Aly. 75, Ln. 564, Wenhua 3rd, Rd., Guishan Dist., Taoyuan City 333010, Taiwan
Test Site No.	SAR-5GNR01-HY, SAR-5GNR02-HY

3 SAR E-Field Probe

Construction	Symmetric design with triangular core Built-in shielding against static charges PEEK enclosure material (resistant to organic solvents, e.g., DGBE)	
Frequency	10 MHz – >6 GHz Linearity: ±0.2 dB (30 MHz – 6 GHz)	
Directivity	±0.3 dB in TSL (rotation around probe axis) ±0.5 dB in TSL (rotation normal to probe axis)	
Dynamic Range	10 μW/g – >100 mW/g Linearity: ±0.2 dB (noise: typically <1 μW/g)	
Dimensions	Overall length: 337 mm (tip: 20 mm) Tip diameter: 2.5 mm (body: 12 mm) Typical distance from probe tip to dipole centers: 1 mm	

4 Data Acquisition Electronics (DAE)

The data acquisition electronics (DAE) consists of a highly sensitive electrometer-grade preamplifier with auto-zeroing, a channel and gain-switching multiplexer, a fast 16 bit AD-converter and a command decoder and control logic unit. Transmission to the measurement server is accomplished through an optical downlink for data and status information as well as an optical uplink for commands and the clock.

The input impedance of the DAE is 200 MOhm; the inputs are symmetrical and floating. Common mode rejection is above 80 dB.

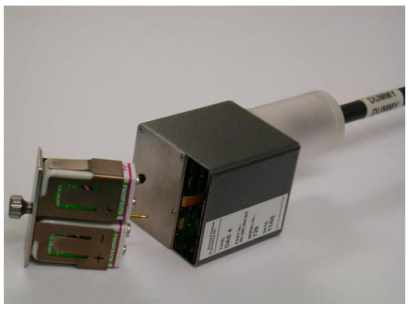

5 Test Equipment List

Manufacturer	Name of Equipment	Type/Model	Serial Number	Calibration	
				Last Cal.	Due Date
SPEAG	750MHz System Validation Kit	D750V3	1107	Jun. 11, 2025	Jun. 10, 2026
SPEAG	835MHz System Validation Kit	D835V2	4d167	Dec. 02, 2025	Dec. 01, 2026
SPEAG	1900MHz System Validation Kit	D1900V2	5d185	Jun. 11, 2025	Jun. 10, 2026
SPEAG	2600MHz System Validation Kit(2)	D2600V2	1008	Aug. 15, 2024	Aug. 13, 2026
SPEAG	3500MHz System Validation Kit(2)	D3500V2	1014	Jan. 15, 2025	Jan. 13, 2027
SPEAG	Data Acquisition Electronics	DAE4ip	1823	Jul. 11, 2025	Jul. 10, 2026
SPEAG	Dosimetric E-Field Probe	EX3DV4	7813	May. 21, 2025	May. 20, 2026
Keysight	5G Wireless Test Platform	E7515B	MY58300712	Sep. 09, 2025	Sep. 08, 2026
R&S	Wideband Radio Communication Tester	CMW500	169351	Jul. 14, 2025	Jul. 13, 2026
R&S	Power Sensor	NRP8S	103999	Jan. 06, 2026	Jan. 05, 2027
R&S	Power Sensor	NRP8S	109687	Sep. 22, 2025	Sep. 21, 2026
Anritsu	Signal Generator	MG3710A	6201502524	Sep. 24, 2025	Sep. 23, 2026
Mini-Circuits	Power Amplifier	ZVE-8G+	6418	Oct. 23, 2025	Oct. 22, 2026
Mini-Circuits	Power Amplifier	ZHL-42W+	QA1344002	Oct. 17, 2025	Oct. 16, 2026
Anritsu	Power Meter	ML2495A	1804003	Aug. 18, 2025	Aug. 17, 2026
Anritsu	Power Sensor	MA2411B	1726150	Aug. 18, 2025	Aug. 17, 2026
Anritsu	Spectrum Analyzer	MS2830A	6272625959	Aug. 14, 2025	Aug. 13, 2026
Keysight	ENA Network Analyzer	E5071C	MY46104758	Oct. 14, 2025	Oct. 13, 2026
SPEAG	Dielectric Probe Kit	DAK-3.5	1126	Sep. 16, 2025	Sep. 15, 2026
LINE SEIKI	Digital Thermometer	DTM3000-spezial	3690	Aug. 14, 2025	Aug. 13, 2026
Warison	10-50 GHz Directional Coupler	WCOU-10-50S-10	WR889BMC481	Note 1	
ATM	500M-18GHz Dual Directional Coupler	C122H-10	P610410z-02	Note 1	
Woken	Attenuator 1	WK0602-XX	N/A	Note 1	
PE	Attenuator 2	PE7005-10	N/A	Note 1	
PE	Attenuator 3	PE7005- 3	N/A	Note 1	

General Note:

1. Prior to system verification and validation, the path loss from the signal generator to the system check source and the power meter, which includes the amplifier, cable, attenuator and directional coupler, was measured by the network analyzer. The reading of the power meter was offset by the path loss difference between the path to the power meter and the path to the system check source to monitor the actual power level fed to the system check source.
2. The dipole calibration interval can be extended to 3 years with justification. The dipoles are also not physically damaged, or repaired during the interval. The justification data in appendix D can be found which the return loss is < -20dB, within 20% of prior calibration, the impedance is within 5 ohm of prior calibration for each dipole.

6 SAR system verification and validation

Tissue Verification

The following tissue formulations are provided for reference only as some of the parameters have not been thoroughly verified. The composition of ingredients may be modified accordingly to achieve the desired target tissue parameters required for routine SAR evaluation.

Frequency (MHz)	Water (%)	Sugar (%)	Cellulose (%)	Salt (%)	Preventol (%)	DGBE (%)	Conductivity (σ)	Permittivity (εr)
835	40.3	57.9	0.2	1.4	0.2	0	0.90	41.5
1750, 1900, 2000	55.2	0	0	0.3	0	44.5	1.40	40.0
2300	55.0	0	0	0	0	45.0	1.67	39.5
2600	54.8	0	0	0.1	0	45.1	1.96	39.0

Simulating Liquid for 5GHz, Manufactured by SPEAG

Ingredients	(% by weight)
Water	64~78%
Mineral oil	11~18%
Emulsifiers	9~15%
Additives and Salt	2~3%

<Tissue Check Results>

Frequency (MHz)	Liquid Temp. (℃)	Conductivity (σ)	Permittivity (ε_r)	Conductivity Target (σ)	Permittivity Target (ε_r)	Delta (σ) (%)	Delta (ε_r) (%)	Limit (%)	Date
750	22.7	0.904	44.800	0.89	41.90	1.57	6.92	±10	2026/4/17
835	22.7	0.900	43.500	0.90	41.50	0.00	4.82	±10	2026/4/17
1900	22.7	1.47	40.7	1.40	40.00	5.00	1.75	±10	2026/4/17
2600	22.7	2	41.6	1.96	39.00	2.04	6.67	±10	2026/4/17
3500	22.7	2.800	40.000	2.91	37.90	-3.78	5.54	±10	2026/4/17

System Verification

Comparing to the original SAR value provided by SPEAG, the verification data should be within its specification of 10 %. Below table shows the target SAR and measured SAR after normalized to 1W input power. The table below indicates the system performance check can meet the variation criterion and the plots can be referred to Appendix C.

<System Verification Results>

Date	Frequency (MHz)	Input Power (mW)	Dipole S/N	Probe S/N	DAE S/N	Measured 1g SAR (W/kg)	Targeted 1g SAR (W/kg)	Normalized 1g SAR (W/kg)	Deviation (%)
2026/4/17	750	250	D750V3-1107	EX3DV4 - SN7813	DAE4ip Sn1823	2.210	8.840	8.84	0.00
2026/4/17	835	250	D835V2-4d167	EX3DV4 - SN7813	DAE4ip Sn1823	2.510	9.360	10.04	7.26
2026/4/17	1900	50	D1900V2-5d185	EX3DV4 - SN7813	DAE4ip Sn1823	1.980	39.600	39.6	0.00
2026/4/17	2600	50	D2600V2-1008	EX3DV4 - SN7813	DAE4ip Sn1823	2.720	55.700	54.4	-2.33
2026/4/17	3500	50	D3500V2-1014	EX3DV4 - SN7813	DAE4ip Sn1823	3.480	65.700	69.6	5.94