Homeowner's
Installation Instructions &
Operating Manual

Model:210-220，210-234，210-245，210-262

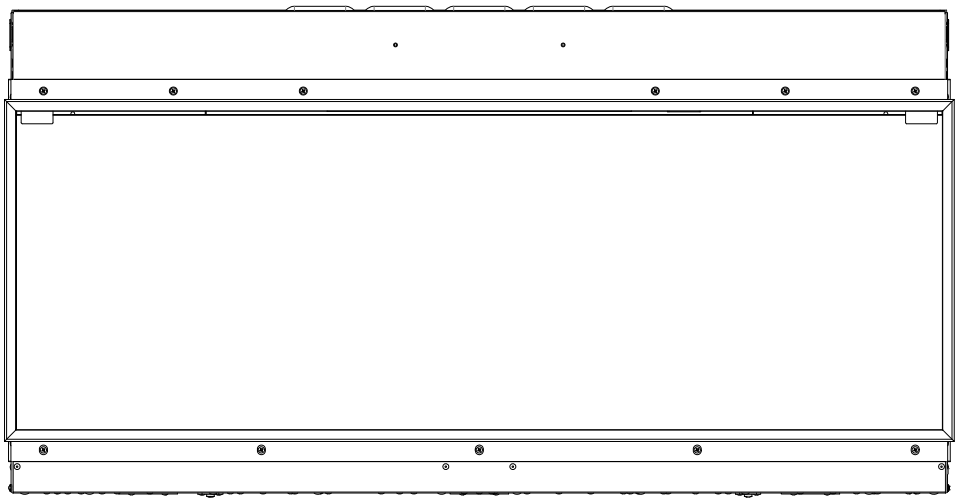

Please read the instructions carefully before installation or use of this electric fire and retained for future reference.

GAZCO LIMITED
Spitfire Avenue,Skypark,Clyst Honiton,Exeter, Devon, EX5 2FR, UNITED KINGDOM

TABLE OF CONTENTS

SECTION 1: WARNINGS & ELECTRIC SPECIFICATIONS

1.1 Important Safety Instructions 2

1.2 Specifications 3

SECTION 2: INSTALLATION

2.1 Tools required 3

2.2 Unpacking the Fireplace 3

2.3 Parts and hardware .....4~6

2.4 Assembly…… .....6~14

SECTION 3: OPERATING INSTRUCTIONS

3.1 Operating by Manual Button 14,15

SECTION 4: MAINTENANCE

4.1 Remote Handset Battery Replacement 15

4.2 Maintenance of Motors 15

4.3 Resetting the Thermal Cutout Switch 15

4.4 Cleaning the Fireplace 16

4.5 Environment.....16

5 Information requirements for electric local space heaters.....16

CAUTION: BEFORE OPERATING THIS EQUIPMENT
PLEASE READ THESE INSTRUCTIONS CAREFULLY.

SECTION 1 WARNINGS & ELECTRIC SPECIFICATIONS

1.1 Important Safety Instructions

This symbol alerts you to potential hazards that can kill or hurt you and/or others.

DO NOT:

- *install or operate damaged heater*
- *modify heater*
- *operate the heater without fully assembling all components*

WARNING! Improper installation, adjustment, alteration, service or maintenance can cause injury or property damage. *Refer to the owner's information manual provided with this heater. For assistance or additional information consult a qualified installer, service agency or your dealer.*

WARNING! *When using electrical heaters, basic precautions should always be followed to reduce the risk of fire, electric shock and injury to persons, including the following:*

- This heater must not be located immediately below a socket-outlet.
- This heater must be earthed. If in any doubt consult a suitable competent person.
- This appliance can be used by children aged from 8 years and above and persons with reduced physical, sensory or mental capabilities or lack of experience and knowledge if they have been given supervision or instruction concerning use of the appliance in a safe way and understand the hazards involved.
- In order to avoid a hazard due to inadvertent resetting of the thermal cutout, this appliance must not be supplied through an external switching device ,such as a timer, or connected to circuit that is regularly switched on and off by utility.
- Children shall not play with the appliance.
- Cleaning and user maintenance shall not be made by children without supervision.
- Children of less than 3 years should be kept away unless continuously supervised.
- Children aged from 3 years and less than 8 years shall only switch on/off the appliance provided that it has been placed or installed in its intended normal operating position and they have been given supervision or instruction concerning use of the appliance in a safe way and understand the hazards involved. Children aged from 3 years and less than 8 years shall not plug in, regulate and clean the appliance or perform user maintenance.
- This appliance can be used by children aged from 8 years and above and persons with reduced physical, sensory or mental capabilities or lack of experience and knowledge if they have been given supervision or instruction concerning use of the appliance in a safe way and understand the hazards involved.
- Some parts of this product can become very hot and cause burns. Particular attention has to be given where children and vulnerable people are present.
- If the supply cord is damaged, it must be replaced by a specially cord or assembly available from the manufacturer or its service agent.
- Do not use this fire as a free-standing appliance. It must always be fixed to the wall, fireplace mantel, floor etc.
- Do not cover: In order to avoid overheating, do not cover the heater.

WARNING! This appliance is not intended for use by persons (including children) with reduced physical, sensory or mental capabilities, or lack of experience and knowledge, unless they have been given supervision or instruction concerning use of the appliance by a person responsible for their safety.

- The heater must not be located in front of a socket-outlet.

1.2 Specifications

Voltage …… …… ……120 V AC, 60Hz

Watts…… …… ……1500 Watts

Remote control frequency……ASK/OOK 433.92MHZ

Remote control maximum transmit power……10mW

Dimensions：

Units: mm

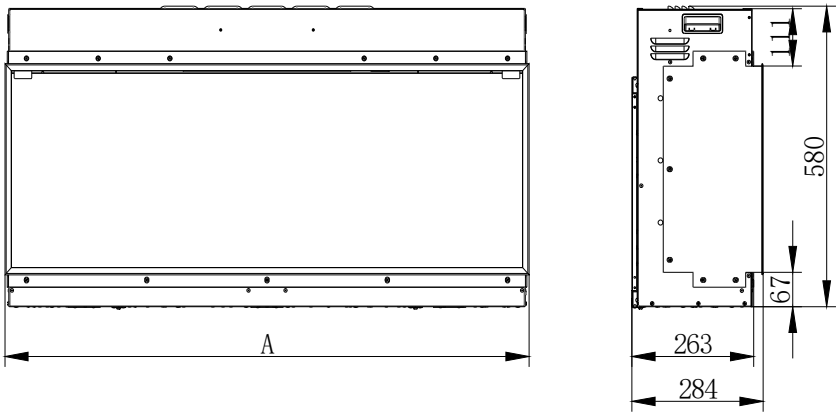

	210-220	210-234	210-245	210-262
A	1133	1383	1533	1983

SECTION 2 INSTALLATION

2.1 Tools required

Magnetic Phillips Screw Driver

Rotary Hammer

2.2 Unpacking the Fireplace

WARNING! Do NOT use this appliance if any part has been under water.
Immediately call a qualified service technician to inspect and to replace any part of the electrical system if necessary.
Keep plastic wrapping away from children.

- *Open the packaging carefully and remove the foam.*
- *Remove and discard the plastic bag.*
- *Be responsible when handling the packing materials.*
- *Keep the original packaging for future transport and/or storage.*
- *Check all accessories are got before you keep the packing.*

2.3 Parts and hardware

PARTS AND HARDWARE - GENERAL

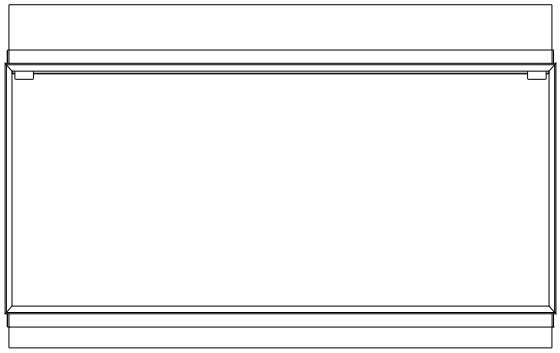

Firebox (1)

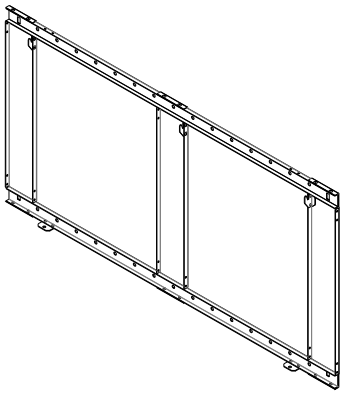

Wall Mount Bracket(1)

NOTE: The Wall Mount Bracket is attached to the back of the Firebox by two M5*10 Screws.

Box 1 – Log set

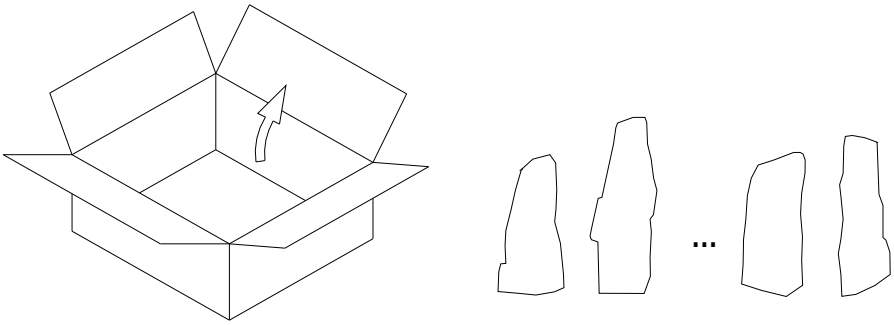

Logs (1 set)

Box 2 – Bag 1(Owner's Manual & Remote Control & Wall-mounted Hardware & Brackets) & Power Cord & Decorated pebbles and stones&Trims

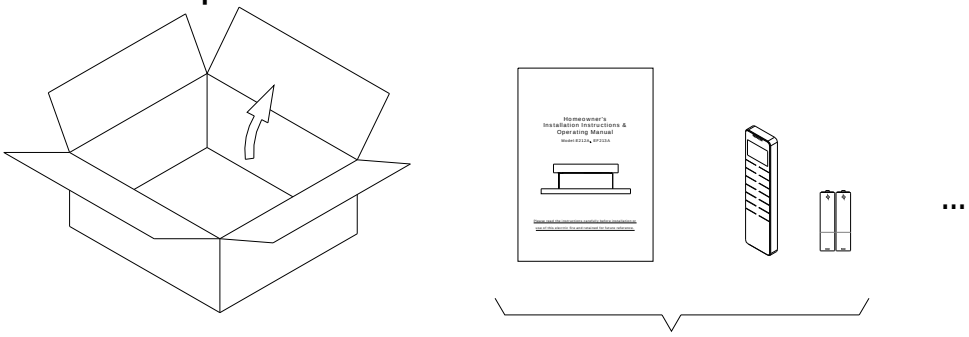

Bag 1 –Owner's Manual & Remote Control & Wall- mounted Hardware & Brackets

Owner's Manual(1)

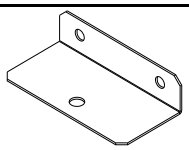

L-Brackets
210-220 (4)
210-234/245*262 (6)

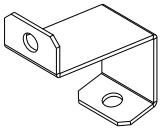

Tail Bracket(1)

Screw ST4*8
210-220 (9)
210-234/245*262 (13)

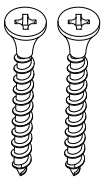

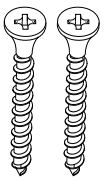

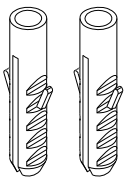

	Screw ST4*40 210-220(4) 210-220/234/245 (6)	Screw ST5*40 210-220/234/245(8) 210-262 (10)	ϕ 8*40 210-220/234/245 (8) 210-262 (10)
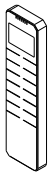 Remote Control(1)	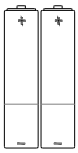 AAA Battery (2)	Power Cord & Tail Bracket Power Cord(1)	

Decorated Pebbles & Stones

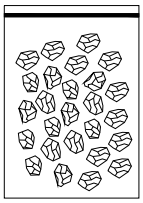	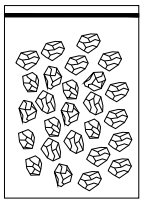	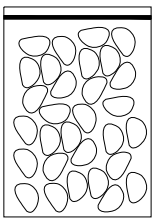	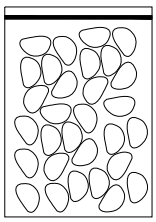
glass embers(small)	glass embers(large)	pumice stone	black glasses
210-220(1.4Kg)	210-220 (3set)	210-220 (1set)	210-220 (3.6Kg)
210-234 (1.8 Kg)	210-234 (4set)	210-234 (1set)	210-234 (4.4 Kg)
210-245 (2.1 Kg)	210-245 (5set)	210-245 (1set)	210-245 (4.2 Kg)
210-262 (2.7 Kg)	210-262 (6set)	210-262 (1set)	210-262 (5.4 Kg)

Trims

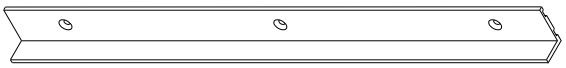 BackTrim(2)	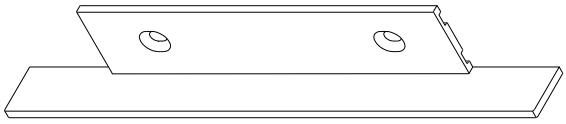 Side Trim(4)

2.4 Assembly

LOCATING YOUR ELECTRIC FIREPLACE

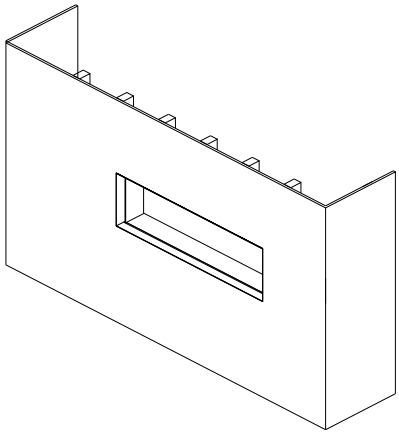

1)Single sight

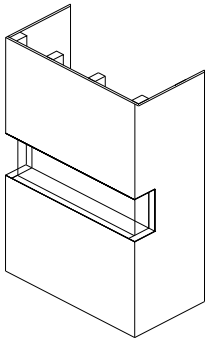

2)Three sided vision

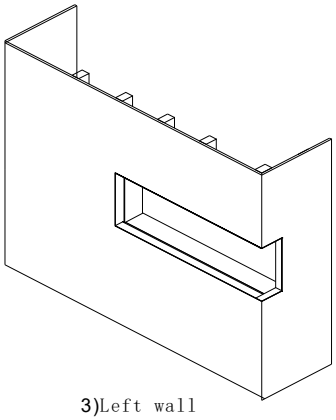

3)Left wall

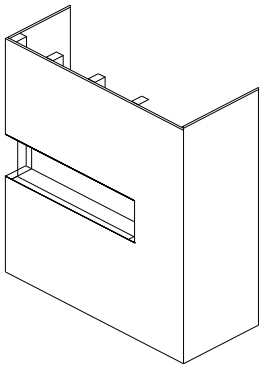

4)Left wall

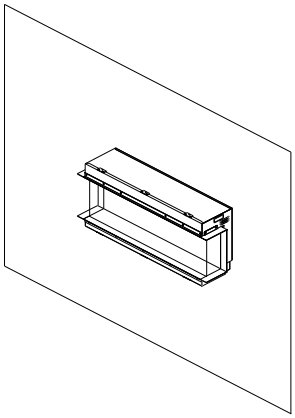

5)wall-mounted

1. the steps for Embedded installation

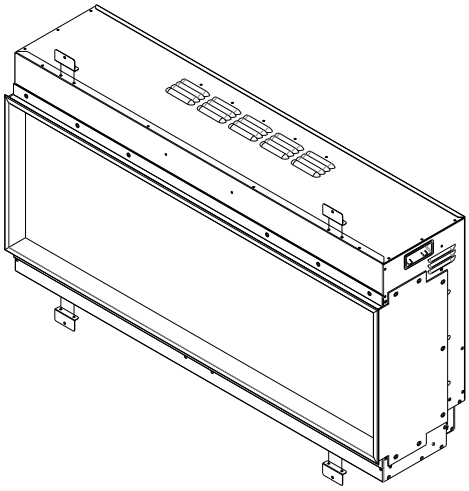

(1) Install the mounting bracket with st4* 8 self-tapping screw to install on the product, as shown in the picture

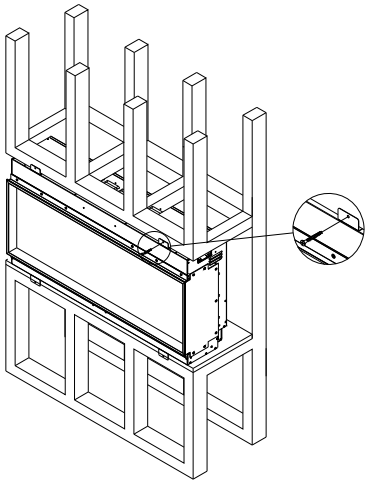

(2) Fixed the mounting bracket on the wooden file with st4*40 screw, as shown in the picture

2.The high wall installation (this size is an example of EF371B)

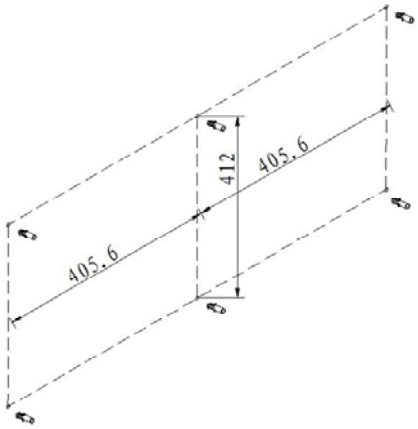

Step 1: use the box on the wall to make the hole 6-be 8, deep, 50, and put in the wall plug；

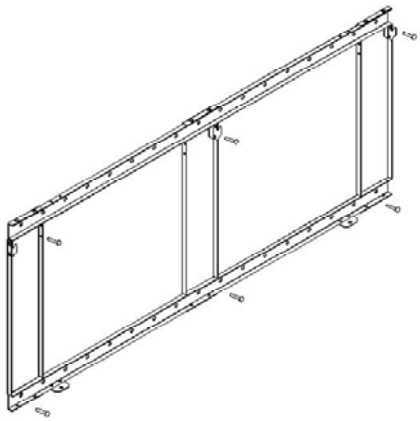

Step 2: fixed wall hanging components with ST5*40 screws；

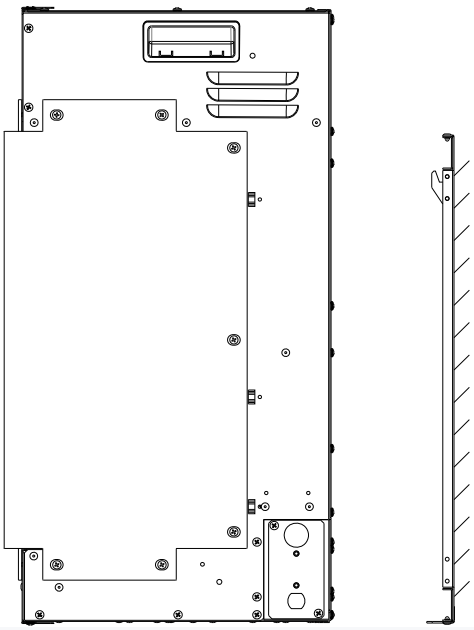

Step 3: hang the product on the wall of the wall, and the bottom face is fixed with two M5*10 screws, and the installation is finished。

2.4 Electrical Wiring Diagram

210-220

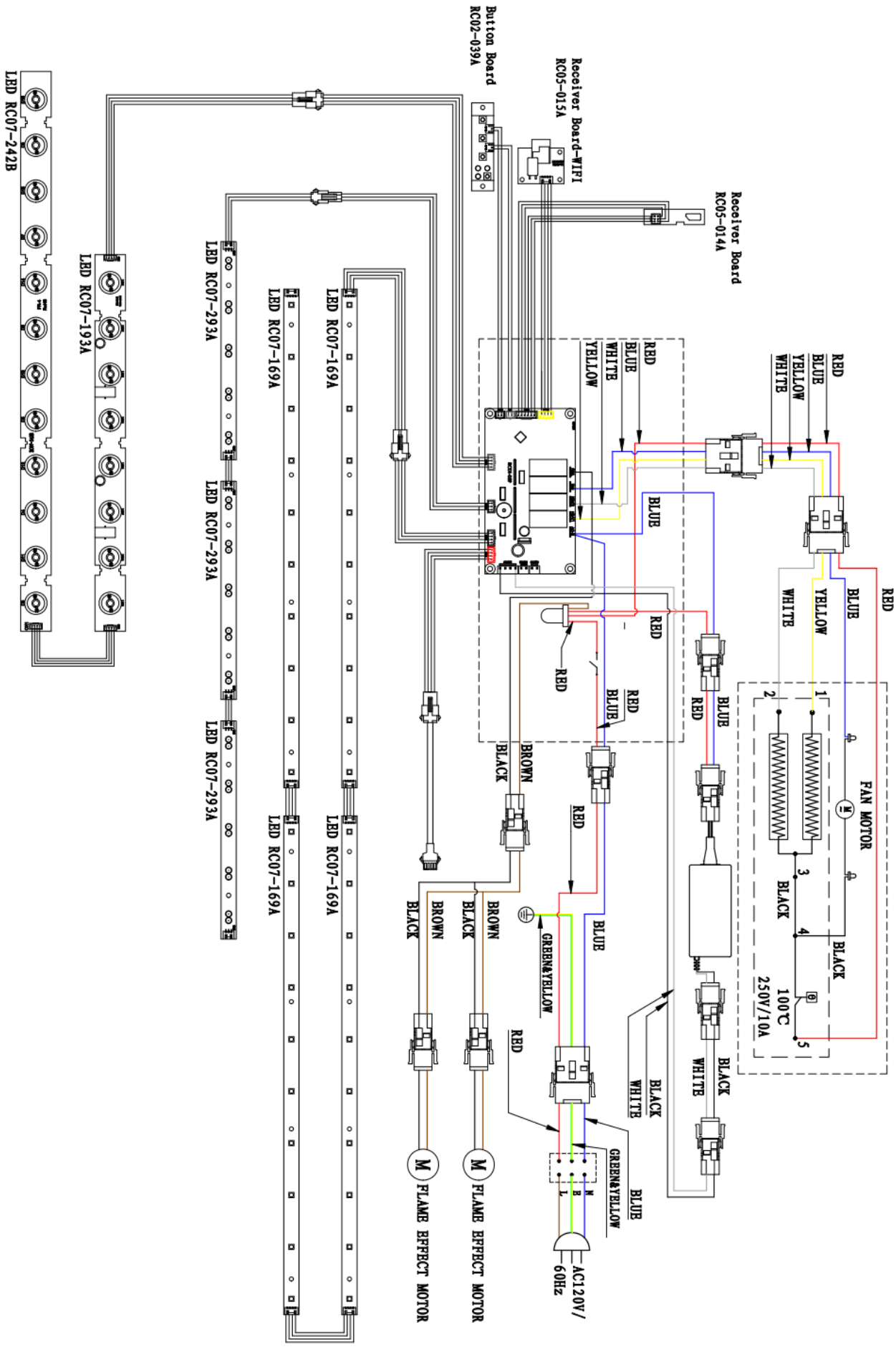

210-234

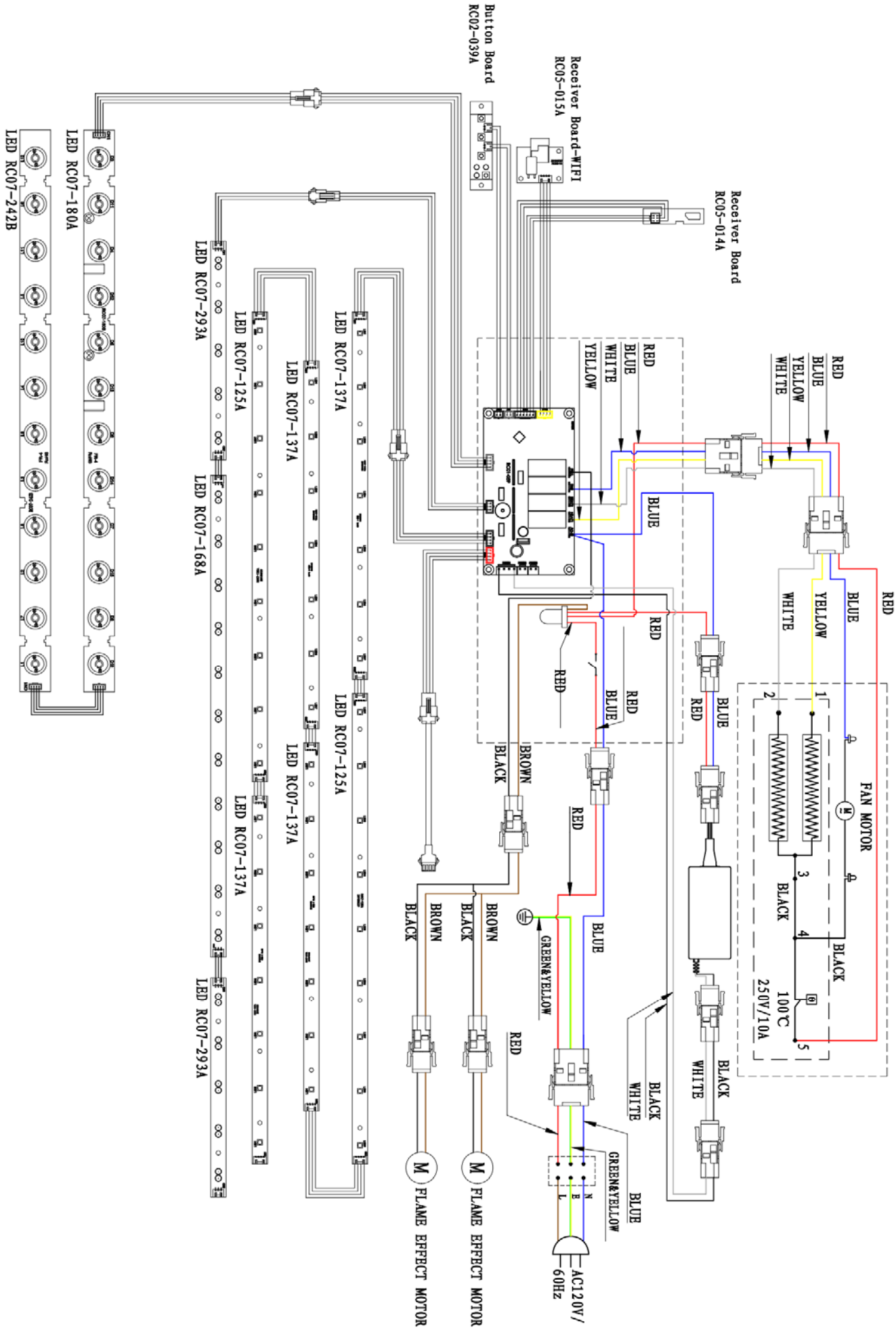
Receiver Board
RC05-014A
Receiver Board-WIFI
RC05-015A
Button Board
RC02-039A
LED RC07-242B
LED RC07-180A
LED RC07-293A
LED RC07-168A
LED RC07-125A
LED RC07-137A
LED RC07-137A
LED RC07-125A
LED RC07-137A
LED RC07-137A
LED RC07-293A
RED
BLUE
YELLOW
WHITE
FAN MOTOR
BLACK
100℃
250V/10A
BROWN
GREEN&YELLOW
FLAME EFFECT MOTOR
FLAME EFFECT MOTOR
AC120V/
60Hz

223-345

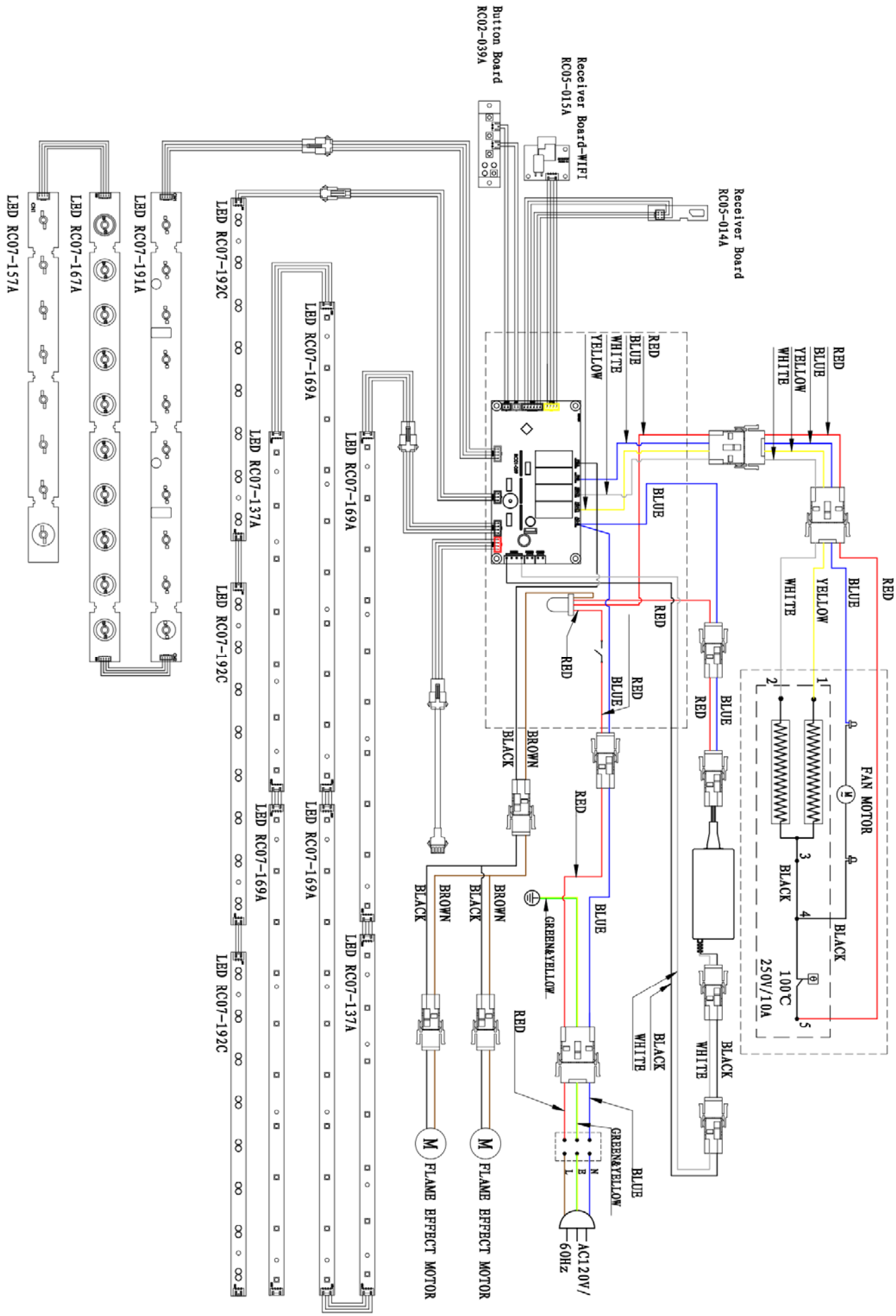
Receiver Board
RC05-014A
Receiver Board-WIFI
RC05-015A
Button Board
RC02-039A
LED RC07-157A
LED RC07-167A
LED RC07-191A
LED RC07-192C
LED RC07-169A
LED RC07-137A
RED
BLUE
YELLOW
WHITE
BROWN
BLACK
GREEN&YELLOW
FAN MOTOR
100℃
250V/10A
FLAME EFFECT MOTOR
AC120V/
60Hz

210-262

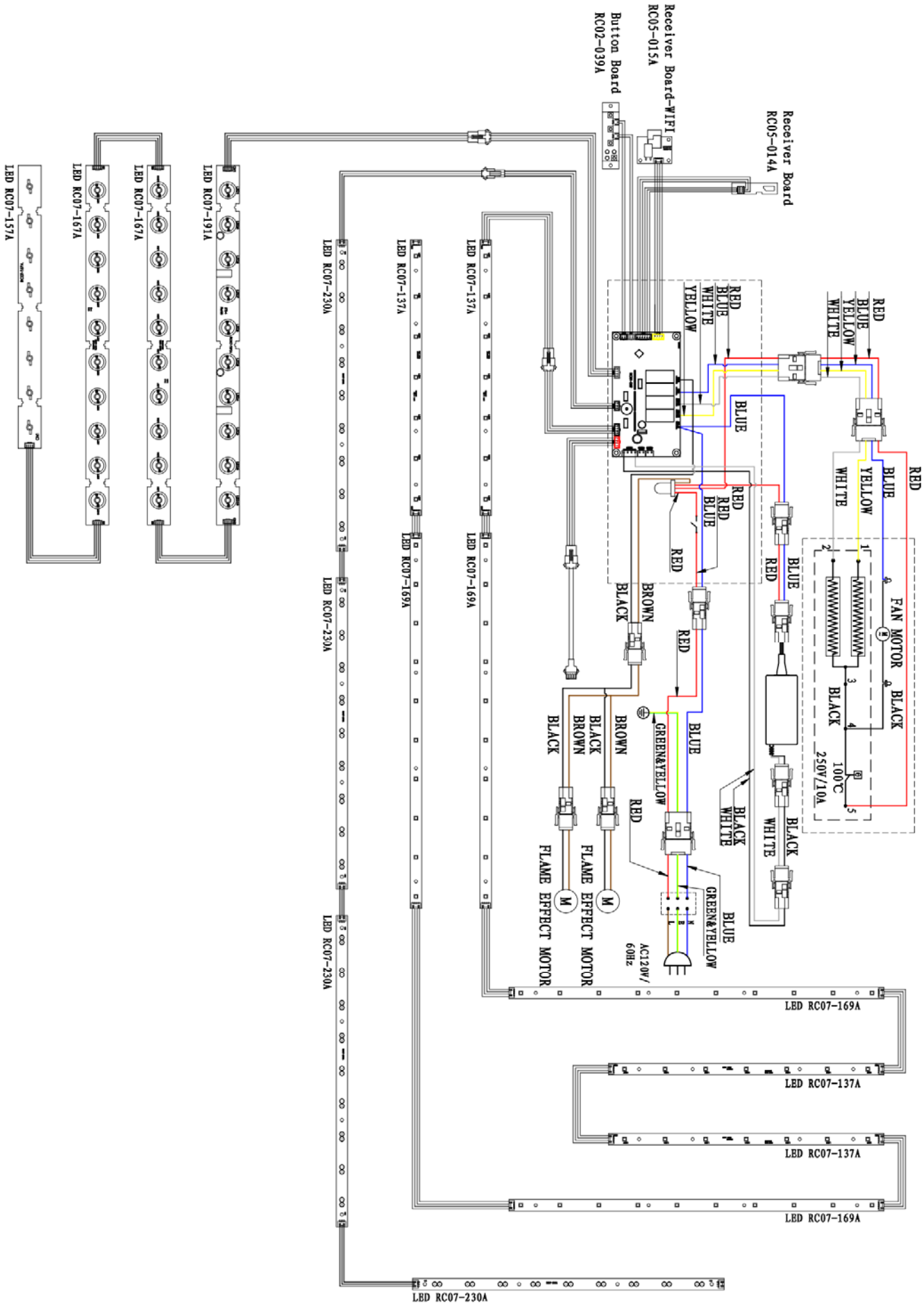
Receiver Board
RC05-014A
Receiver Board-WIFI
RC05-015A
Button Board
RC02-039A
LED RC07-191A
LED RC07-167A
LED RC07-167A
LED RC07-157A
LED RC07-230A
LED RC07-137A
LED RC07-169A
LED RC07-137A
LED RC07-169A
LED RC07-230A
LED RC07-230A
LED RC07-169A
LED RC07-137A
LED RC07-137A
LED RC07-169A
LED RC07-230A
RED
BLUE
YELLOW
WHITE
FAN MOTOR
BLACK
100℃
250V/10A
BROWN
GREEN&YELLOW
FLAME EFFECT MOTOR
AC120V/
60Hz

SECTION 3 OPERATING INSTRUCTIONS

1. Manual Control Panel

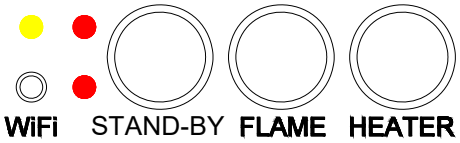

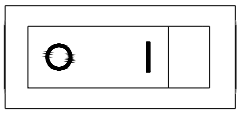

BUTTON	FUNCTION	ACTION & INDICATION
	ON: Turns on the standby mode. Enables all of the functions and remote control. **OFF**: Turns off all of the fireplace functions, and disables remote control.	Turn the main power switch on. A long "beep" will be heard when the switch is turned at ON Position "I".
STAND-BY	It is used to close and open the main flame, the fire, the light, the false wood, the charcoal bed; The key is opened when the state of no memory is in the state of the initial state; When you have a memory state, open the key and open the memory	The buzzer is "beep". The charcoal red light flickered.
FLAME	Cycles through 3 levels of flame settings. Keep pressing for 3 seconds to turn off the "beep" sound for buttons and remote control.	Cycle through 3 levels of flame settings.
HEATER	Press to cycle from Low – High – Off.	The heater will be cycled from Low – High – Heater Off. The indicator light will illuminate when the heater is turned on. The indicator light will go out within 10s.
WiFi	Press a key button to enter the wifi mode. Press one button again and the wifi mode is closed.	The wifi indicator is often bright (orange) or closed
WiFi Indicator lamp	To open or close the wifi mode Used to indicate access to wifi network mode or wifi network	The wifi indicator is often bright (orange) or closed The indicator is flashing or flashing
heating Indicator lamp	For heating instructions	In the case of heating, fire, charcoal bed and light light work, the indicator lights out after 10 seconds, and other keys can be awakened. The light is always on when all the lights, such as fire, charcoal bed and light light, are closed when heating is heated. Background lights are not associated.

The max transmit power of WIFI 2.4GHz is100mW；

The max transmit power of WIFI 433MHz is10mW

The ambient temperature of the heater is -20℃-60℃

2. Remote Control

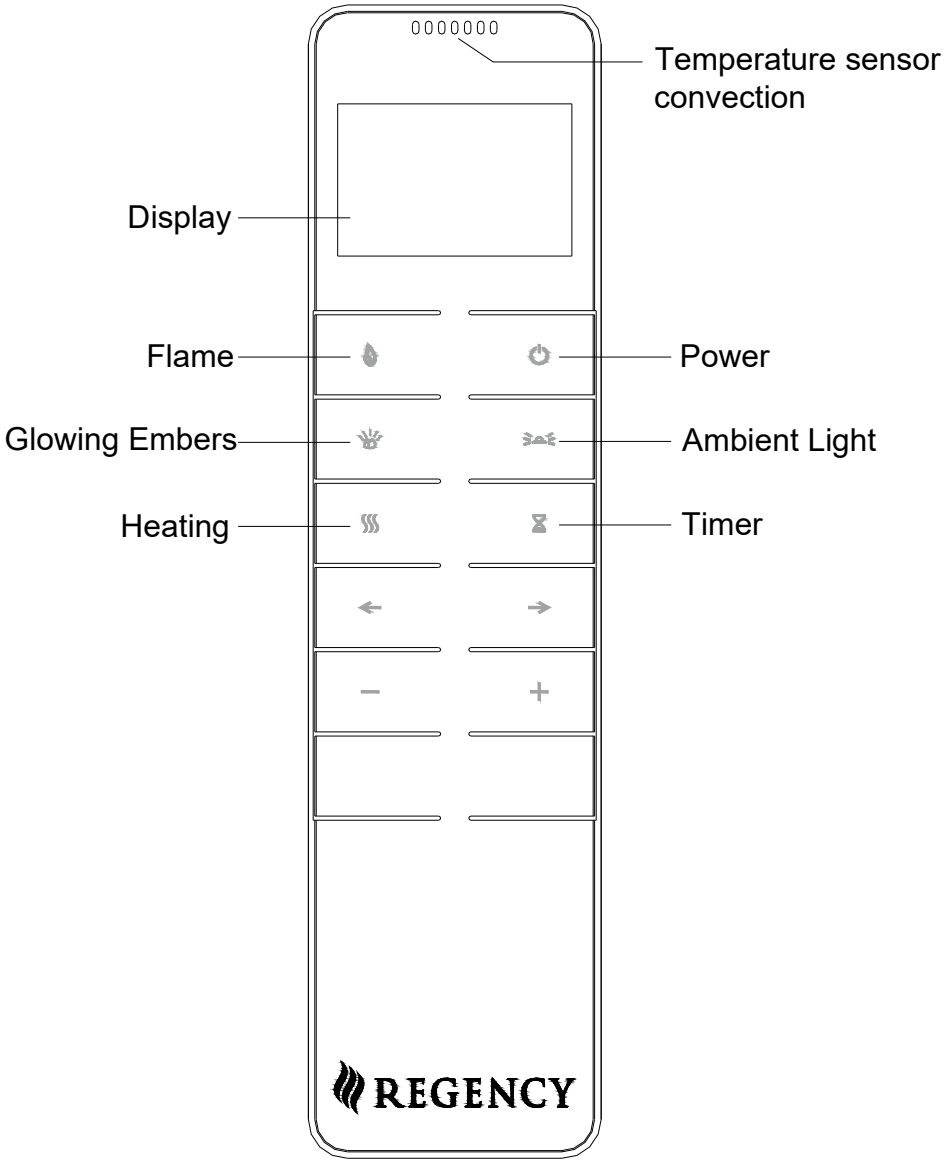

ICON	TITLE	FUNCTION
	POWER	The POWER button will turn the fireplace on, and enter standby mode. This will turn on/off all the functions at once but will hold the settings in memory.
	FLAME	Press the button to enter the flame effect adjustment screen, press '←' and '→' button to cycle through Flame A - Flame B - Flame C - off. Press '+' and '-' button to adjust the brightness from 1-100%, total six settings including off.
	GLOWING EMBERS	Press the button to enter the GLOWING EMBERS settings, press '←' and '→' button to cycle through red - ember - yellow - green – cyan - blue – purple – white – 13 colour cycling - off. Press '+' and '-' button to adjust the brightness from 1-100%, total six settings including off.
	AMBIENT LIGHT	Press the button to enter the AMBIENT LIGHT settings, and the setting will cycle through cold white, white, warm white, light ember, ember, yellow, gold yellow, red, green, cyan, blue, light purple, purple, 13 colour cycling and off. Press '+' and '-' button to adjust the brightness from 0-100%, total six settings including off.

	HEATING	Press the button, and the heater will cycle the heat setting: Low--High- Auto-Off.
	TIMER	Press the button to set the desired time for the fireplace to run. The Timer can be set 0.5H, 1.0H, and then each hour up to 10.0H.
	-	Press the '←' and '→' button to choose different settings such as the colour settings of the corresponding function.
	-	Press the '+' and '-' button to increase or decrease the settings such as the light setting.

CARE AND MAINTENANCE

ALWAYS turn the heater **OFF** and **unplug the power cord from the outlet** before cleaning, performing maintenance, or moving this fireplace. Failure to do so could result in **electric shock, fire, or personal injury**.

Cleaning

NEVER immerse in water or **spray with water.** Doing so could result in **electric shock, fire, or personal injury.**

Metal:

- Buff using a soft cloth, slightly dampened with a citrus oil-based product.
- **DO NOT** use brass polish or household cleaners as these products will damage the metal trim.

Glass:

- Use a good quality glass cleaner and dry thoroughly with a paper towel or lint-free cloth.
- **NEVER** use abrasive cleansers, liquid sprays, or any cleaner that could scratch the surface.

Plastic:

- Wipe gently with a slightly damp cloth and a mild solution of dish soap and warm water.
- **NEVER** use abrasive cleansers, liquid sprays, or any cleaner that could scratch the surface.

Vents:

- Use a vacuum or duster to remove dust and dirt from the heater and vent areas.
- Clean the exterior of the fireplace with a slightly damp cloth or duster.

Maintenance

Risk of electric shock! **DO NOT OPEN! No user-serviceable parts inside!**

ALWAYS turn the heater **OFF** and **unplug the power cord from the outlet** before cleaning, performing maintenance, or moving this fireplace. Failure to do so could result in **electric shock, fire, or personal injury**.

Electrical and Moving Parts:

- The fan motors are lubricated at the factory and will not require lubrication.
- Electrical components are integrated in the fireplace and are not serviceable by the consumer.

Storage:

- Store heater in a clean dry place when not in use.

Replacement parts:

- Use only replacement parts supplied by the manufacturer. Use of any other parts, or modifying the fireplace in any way, will void all warranties.
- No internal parts are replaceable or serviceable.

Cleaning

NEVER immerse in water or **spray with water.** Doing so could result in **electric shock, fire, or personal injury.**

Metal:

- Buff using a soft cloth, slightly dampened with a citrus oil-based product.
- **DO NOT** use brass polish or household cleaners as these products will damage the metal trim.

Glass:

- Use a good quality glass cleaner and dry thoroughly with a paper towel or lint-free cloth.
- **NEVER** use abrasive cleansers, liquid sprays, or any cleaner that could scratch the surface.

Plastic:

- Wipe gently with a slightly damp cloth and a mild solution of dish soap and warm water.
- **NEVER** use abrasive cleansers, liquid sprays, or any cleaner that could scratch the surface.

Vents:

- Use a vacuum or duster to remove dust and dirt from the heater and vent areas.
- Clean the exterior of the fireplace with a slightly damp cloth or duster.

Maintenance

Risk of electric shock! **DO NOT OPEN! No user-serviceable parts inside!**

ALWAYS turn the heater **OFF** and **unplug the power cord from the outlet** before cleaning, performing maintenance, or moving this fireplace. Failure to do so could result in **electric shock, fire, or personal injury**.

Electrical and Moving Parts:

- The fan motors are lubricated at the factory and will not require lubrication.
- Electrical components are integrated in the fireplace and are not serviceable by the consumer.

Storage:

- Store heater in a clean dry place when not in use.

Replacement parts:

- Use only replacement parts supplied by the manufacturer. Use of any other parts, or modifying the fireplace in any way, will void all warranties.
- No internal parts are replaceable or serviceable.

This product is not allowed to be placed at will, which shall be collected and collected
handling

This device complies with part 15 of the FCC Rules. Operation is subject to the following two conditions: (1) This device may not cause harmful interference, and (2) this device must accept any interference received, including interference that may cause undesired operation.

FCC warning:
Any Changes or modifications not expressly approved by the party responsible for compliance could void the user's authority to operate the equipment.

Note: This equipment has been tested and found to comply with the limits for a Class B digital device, pursuant to part 15 of the FCC Rules. These limits are designed to provide reasonable protection against harmful interference in a residential installation. This equipment generates uses and can radiate radio frequency energy and, if not installed and used in accordance with the instructions, may cause harmful interference to radio communications. However, there is no guarantee that interference will not occur in a particular installation. If this equipment does cause harmful interference to radio or television reception, which can be determined by turning the equipment off and on, the user is encouraged to try to correct the interference by one or more of the following measures:

-Reorient or relocate the receiving antenna.
-Increase the separation between the equipment and receiver.
-Connect the equipment into an outlet on a circuit different from that to which the receiver is connected.
-Consult the dealer or an experienced radio/TV technician for help.

The device has been evaluated to meet general RF exposure requirement. The device can be used in portable exposure condition without restriction.