Homeowner's
Installation Instructions &
Operating Manual

Model:223-460、223-484、223-541

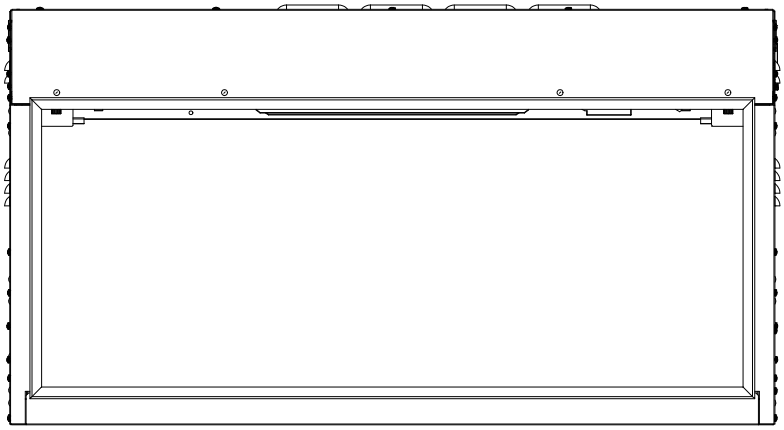

Please read the instructions carefully before installation or use of this electric fire and retained for future reference.

TABLE OF CONTENTS

SECTION 1: WARNINGS & ELECTRIC SPECIFICATIONS

1.1 Important Safety Instructions 2

1.2 Specifications 3

SECTION 2: INSTALLATION

2.1 Tools required 3

2.2 Unpacking the Fireplace 3

2.3 Parts and hardware .....4~6

2.4 Assembly…… .....6~14

SECTION 3: OPERATING INSTRUCTIONS

3.1 Operating by Manual Button 14,15

3.2 Remote Controls .... .14,15

SECTION 4: MAINTENANCE

4.1 Remote Handset Battery Replacement 15

4.2 Maintenance of Motors 15

4.3 Resetting the Thermal Cutout Switch 15

4.4 Cleaning the Fireplace 16

4.5 Environment.....16

5 Information requirements for electric local space heaters.....16

CAUTION: BEFORE OPERATING THIS EQUIPMENT
PLEASE READ THESE INSTRUCTIONS CAREFULLY.

SECTION 1 WARNINGS & ELECTRIC SPECIFICATIONS

1.1 Important Safety Instructions

- **Read all instructions before using this heater!**
- This heater is **hot when in use**. To avoid burns, **DO NOT** let bare skin touch **hot** surfaces. If provided, use handles when moving this heater. Keep **combustible materials**, such as furniture, pillows, bedding, papers, clothes, and curtains at least **3 feet (0.9m)** from the **front of the heater**, and **keep them away from the sides and rear**.
- **Extreme caution** is necessary when any heater is used by or near **children** or **invalids** and whenever the heater is left **operating and unattended**.
- **DO NOT** operate any heater with a **damaged cord or plug** or after the **heater malfunctions**, has been **dropped** or **damaged in any manner**. Discard heater, or return to authorized service facility for examination and/or repair.
- **DO NOT** run **power cord** under carpeting. **DO NOT** cover power cord with throw rugs, runners, or similar coverings. **DO NOT** route power cord under furniture or appliances. Arrange power cord **away from traffic** area, and where it will not be tripped over.
- **DO NOT insert** or **allow foreign objects** to **enter any ventilation or exhaust opening**, as this may cause **electric shock** or **fire**, or **damage the heater**.
- To prevent a possible fire, **DO NOT** block air intakes or exhaust in any manner. Doing so could cause a **fire**. **DO NOT** use on soft surfaces, like a bed, where openings may become blocked.
- A heater has **hot and arcing or sparking parts inside**. **DO NOT** use it in areas where **gasoline, paint, or flammable liquids** are used or stored.
- **Use this heater only as described in this manual. Any other use not recommended by the manufacturer may cause fire, electric shock, or injury to persons.**
- **ALWAYS plug heaters directly into a wall outlet/receptacle. NEVER use with an extension cord or relocatable power tap (outlet/power strip).**
- **DO NOT place the heater near a bed** because objects such as pillows or blankets can fall off the bed and be ignited by the heater.
- **NEVER** use this heater in **bathrooms, laundry rooms**, or any other location where the heater could fall into a **bathtub** or **pool**, **become damp,** or **come in contact with water**.
- **AVOID FIRE!** Regularly inspect all air vents to make sure they are free from dust, lint, or other blockage. **Unplug the unit** and clean with a **vacuum ONLY**. **DO NOT** rinse or get wet.
- **NEVER** hang this unit on a wall **directly below an electrical outlet.**
- **NEVER permanently install in a recessed area of the wall.** This may result in **blocked air flow, overheating,** or **fire.**
- **ALWAYS** mount to wall bracket before use.
- **NEVER** use a wall mount bracket from another manufacturer.
- **WARNING: DO NOT DEPEND ON THE ON/OFF SWITCH THE SOLE MEANS OF**
  DISCONNECTING POWER WHEN SERVICING OR MOVING THE HEATER. ALWAYS UNPLUG THE POWER CORD.

- **WARNING: REDUCE THE RISK OF FIRE OR ELECTRIC SHOCK---DO NOT USE THIS HEATER WITH ANY SOLID STATE SPEED CONTROL DEVICES.**
- **For residential use only! NOT for commercial use!** Any commercial or public use of this heater **voids all warranties**, and could cause **injury**.
- This product is **not intended** to be a **primary heat source.** It is for **supplemental heat only.**
- **INDOOR use only! NEVER** use this heater **outdoors!** Doing so may result in **electric shock!**
- **Risk of electric shock**! **DO NOT OPEN!** No user-serviceable parts inside!
- **NEVER modify this heater**. Doing so could result in personal **injury** or property **damage.** Modification of this fireplace **completely voids all warranties**.
- **ALWAYS** turn this heater off before unplugging it from the outlet.
- **ALWAYS disconnect** this unit from the **power** supply **before** performing any assembly or cleaning, or before relocating the electric fireplace.
- **NEVER** leave this heater unattended. **ALWAYS** unplug this heater when not in use.
- **ALWAYS** store this heater in a dry location. **NEVER** use the fireplace if it has become wet.
- **ONLY** use this heater on a **120V AC 15-Amp circuit**. **NEVER overload the circuit.** If this heater trips the circuit breaker, unplug all other appliances on the same circuit before the next use. Avoid plugging other appliances into the same circuit as this heater.
- **NEVER** plug this heater into an outlet that is **old**, **cracked**, or has any **loose wires or connections**. Plugging this heater into a faulty outlet could result in **electric arcing** within the outlet that could cause the **outlet** to **overheat or catch fire**.
- **ALWAYS** check your heater cord and plug connections with **each use**!
- **MAKE SURE** the plug fits tight in the outlet! Faulty wall outlet connections or loose plugs can cause the outlet to overheat.
- **Heaters draw more current** than small appliances. **Overheating** may occur even if it has not occurred with the use of other appliances.
- During use **check frequently** to see if the **plug outlet or faceplate** is **HOT**! If the outlet or faceplate is **HOT**, **discontinue use immediately** and have a qualified electrician inspect and/or replace the faulty outlets.
- This heater has a **polarized plug (one blade is wider than the other)**. As a safety feature to reduce the risk of electrical shock, this plug is intended to fit in a polarized outlet only one way. If the plug does not fit fully in the outlet, reverse the plug. If it still does not fit, contact a qualified electrician. Do not attempt to defeat this safety feature.

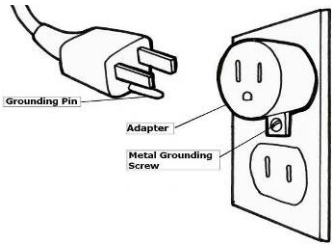

- SAVE THESE INSTRUCTIONS!

1.2 Specifications

Voltage …… …… ……120 V AC, 60HzTotal

Watts…… …… ……1500 Watts

Remote control frequency……ASK/OOK 433.92MHZ

Remote control maximum transmit power……10mW

Dimensions：

Units: mm

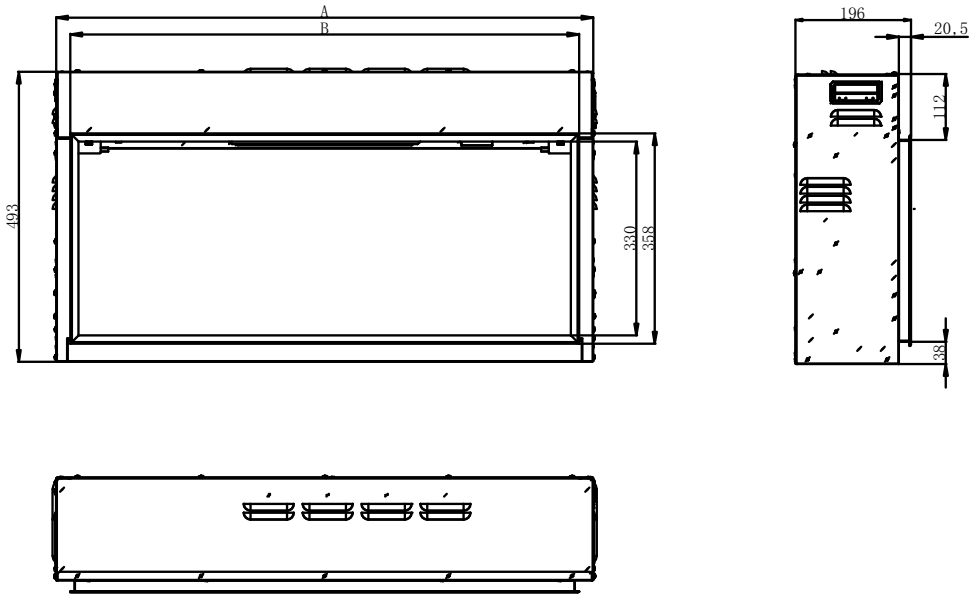

	223-460	223-484	223-541
A	1112	1412	1650
B	1064	1364	1602

SECTION 2 INSTALLATION

2.1 Tools required

Magnetic Phillips Screw Driver

Rotary Hammer

2.2 Unpacking the Fireplace

WARNING! Do NOT use this appliance if any part has been under water.
Immediately call a qualified service technician to inspect and to replace any part of the electrical system if necessary.
Keep plastic wrapping away from children.

- *Open the packaging carefully and remove the foam.*
- *Remove and discard the plastic bag.*
- *Be responsible when handling the packing materials.*
- *Keep the original packaging for future transport and/or storage.*
- *Check all accessories are got before you keep the packing.*

2.3 Parts and hardware

PARTS AND HARDWARE - GENERAL

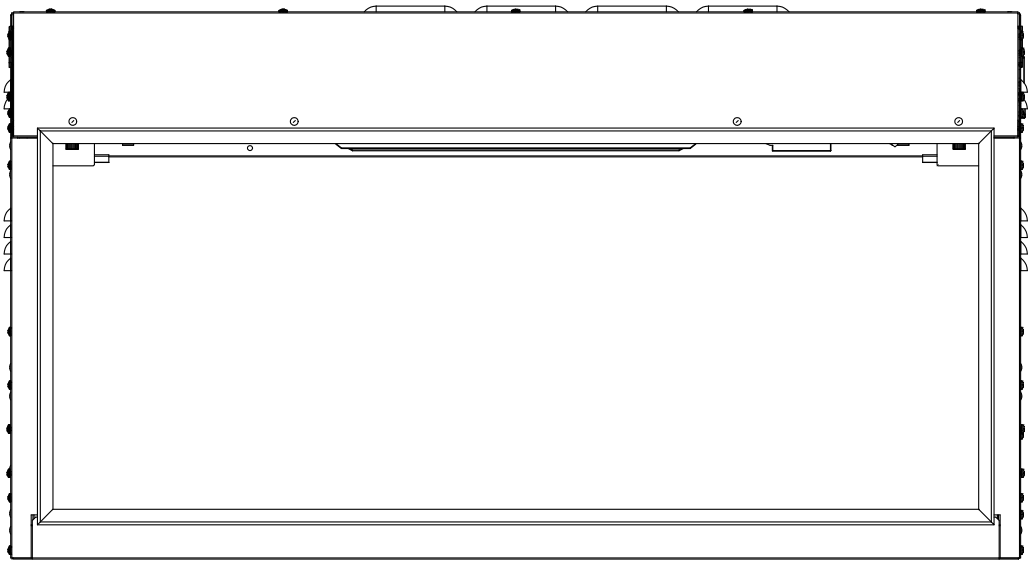

Firebox (1)

Box 1 – Log set

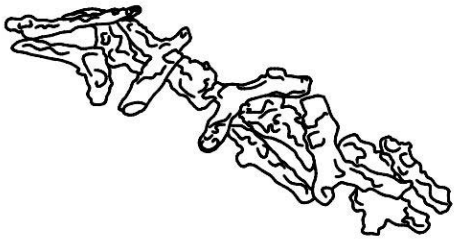

x1

Logs (1 set)

Box 2 –glass embers

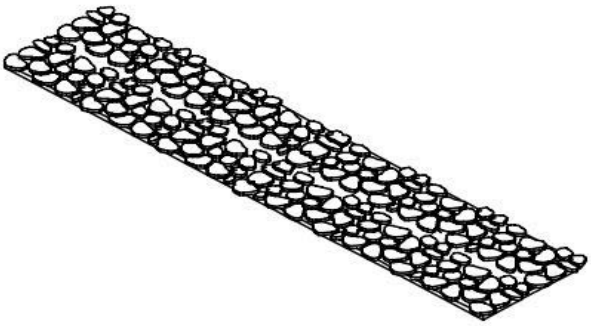

x1

Bag 1 –Owner's Manual & Remote Control & Wall- mounted Hardware & Brackets

Owner's Manual(1)

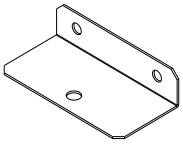

L-Brackets(4)

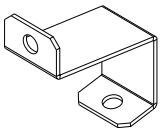

Tail Bracket(4)

Screw ST4*8(1)

Screw ST4*12(1)

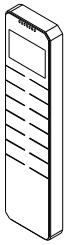

Remote Control(1)

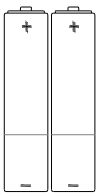

AAA Battery (2)

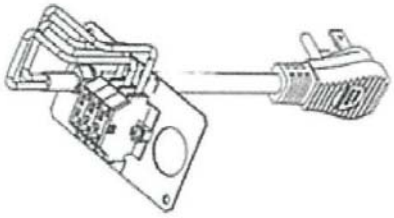

Power Cable and Plug Kit

Power Cord(1)

2.4 Assembly

LOCATING YOUR ELECTRIC FIREPLACE

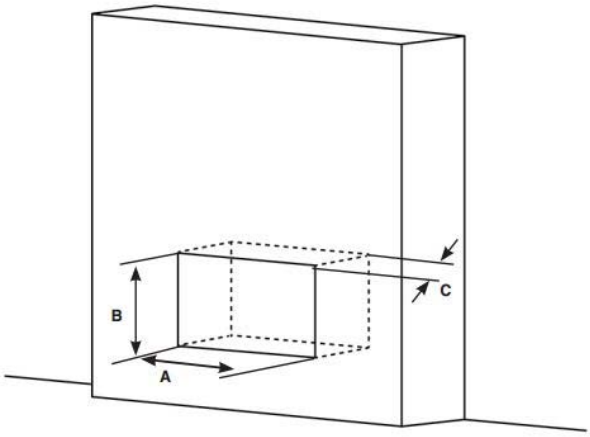

	A	B	C
223-460	1141	193	520
223-484	1441	193	520
223-541	1679	193	520

1. the steps for Embedded installation

(1) Install the mounting bracket with st4* 8 self-tapping screw to install on the product, as shown in the picture

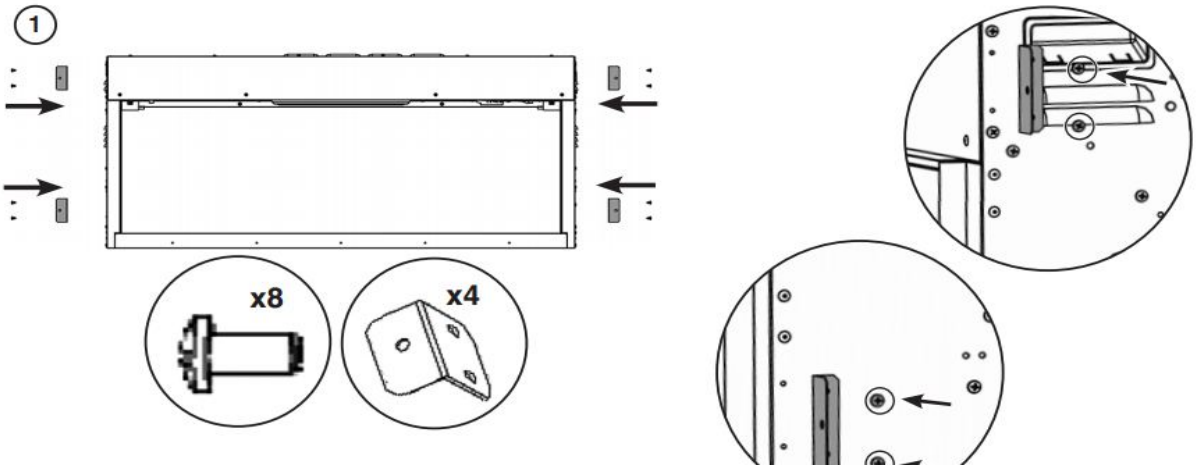

(2) Push your Fireplace to the wooden file

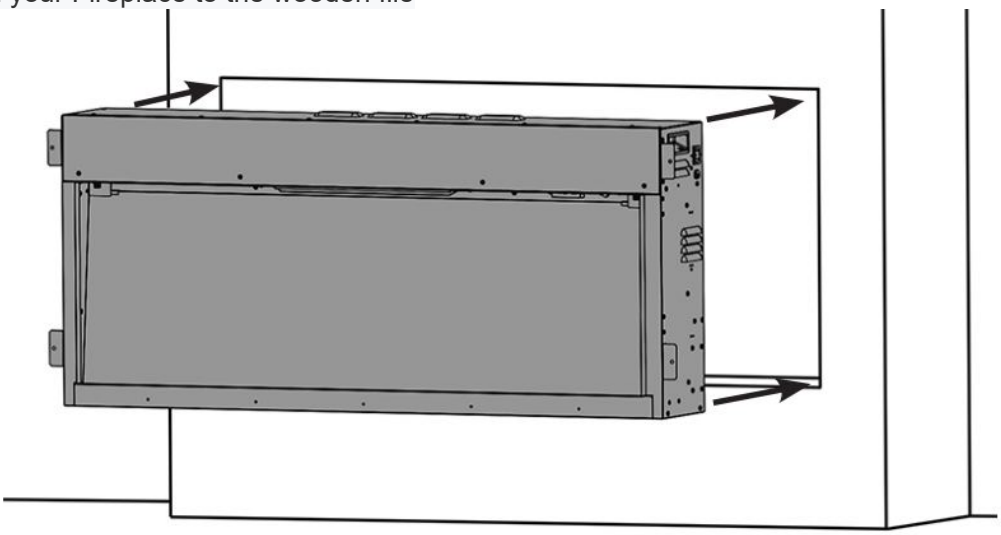

(3) Fixed the mounting bracket on the wooden file with st4*12 screw, as shown in the picture

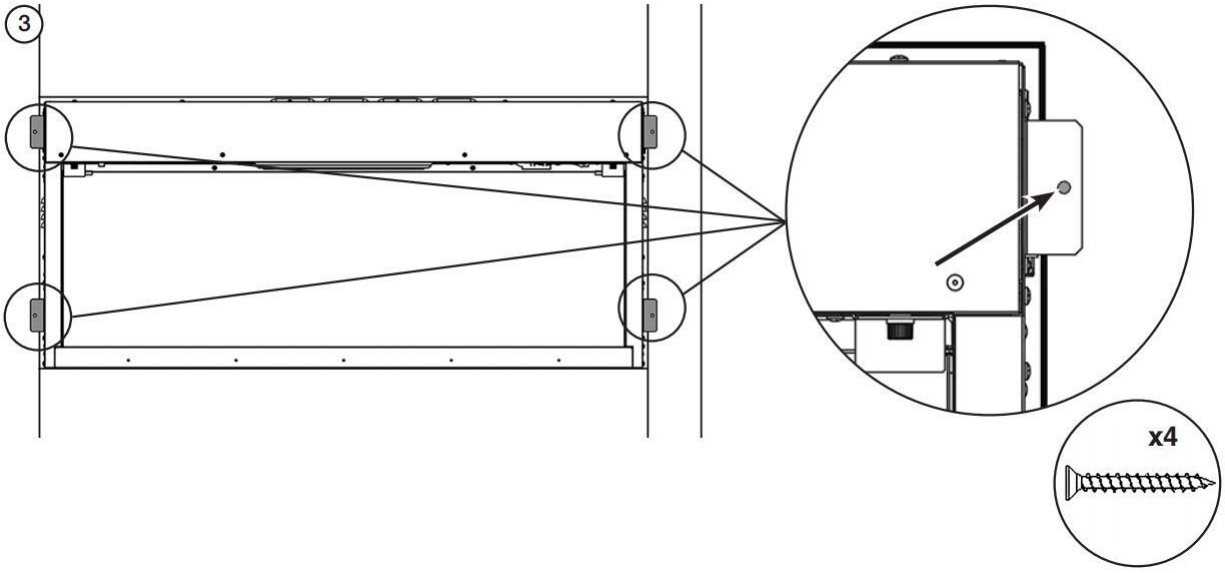

(4) Use drywall to cover the wooden file

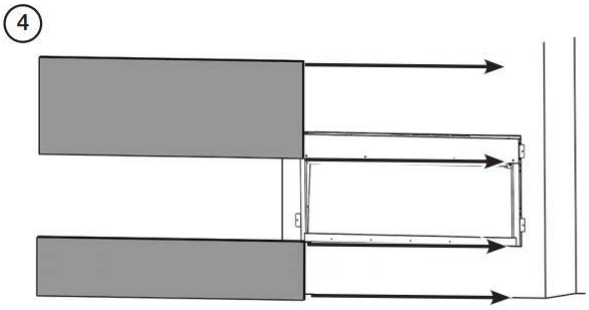

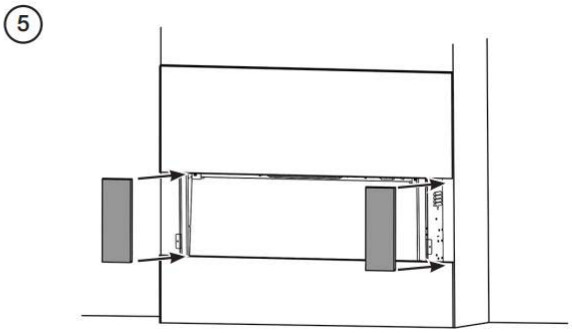

(5) Put the decorative frame

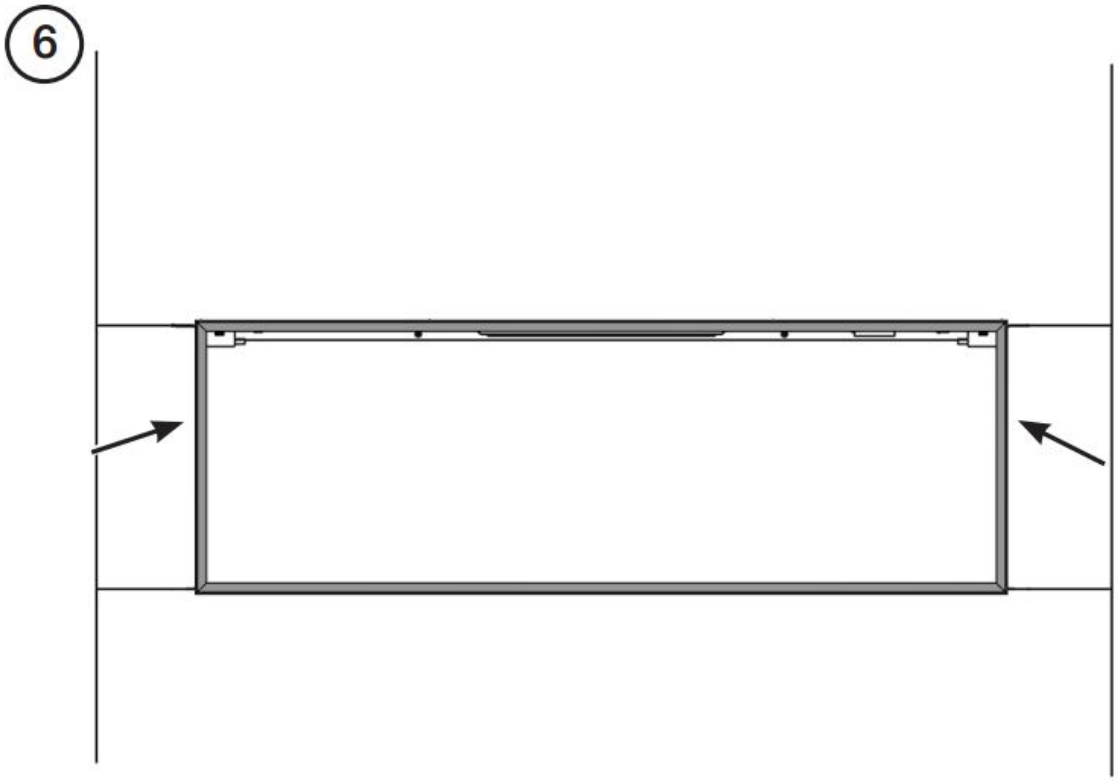

2.5 Electrical Wiring Diagram

223-460

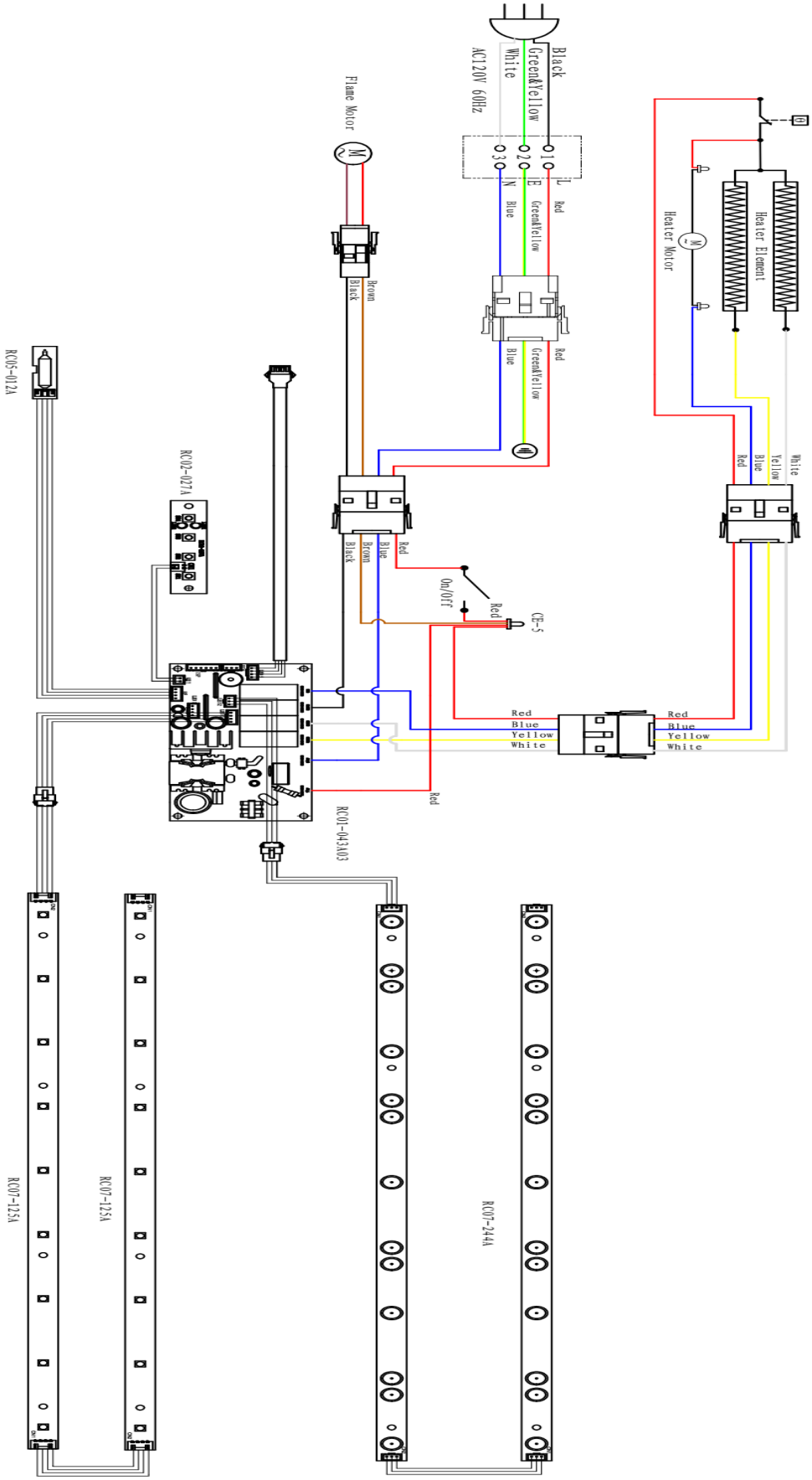

223-484

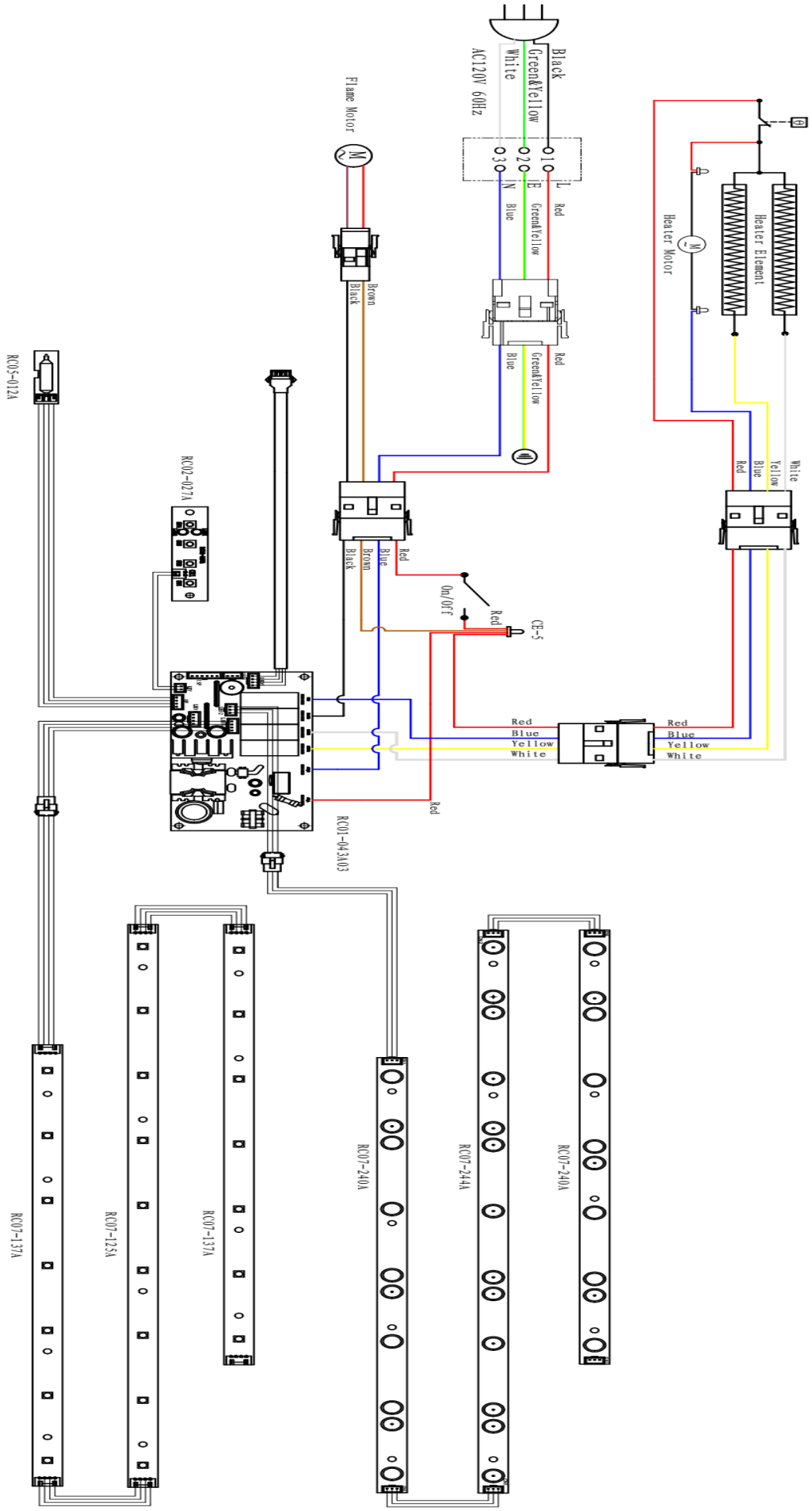

Black
Green&Yellow
White
AC120V 60Hz
Flame Motor
Heater Motor
Heater Element
Red
Blue
Yellow
White
Brown
Black
On/Off
CE-5
RC05-012A
RC02-027A
RC01-043A03
RC07-137A
RC07-125A
RC07-240A
RC07-244A

223-541

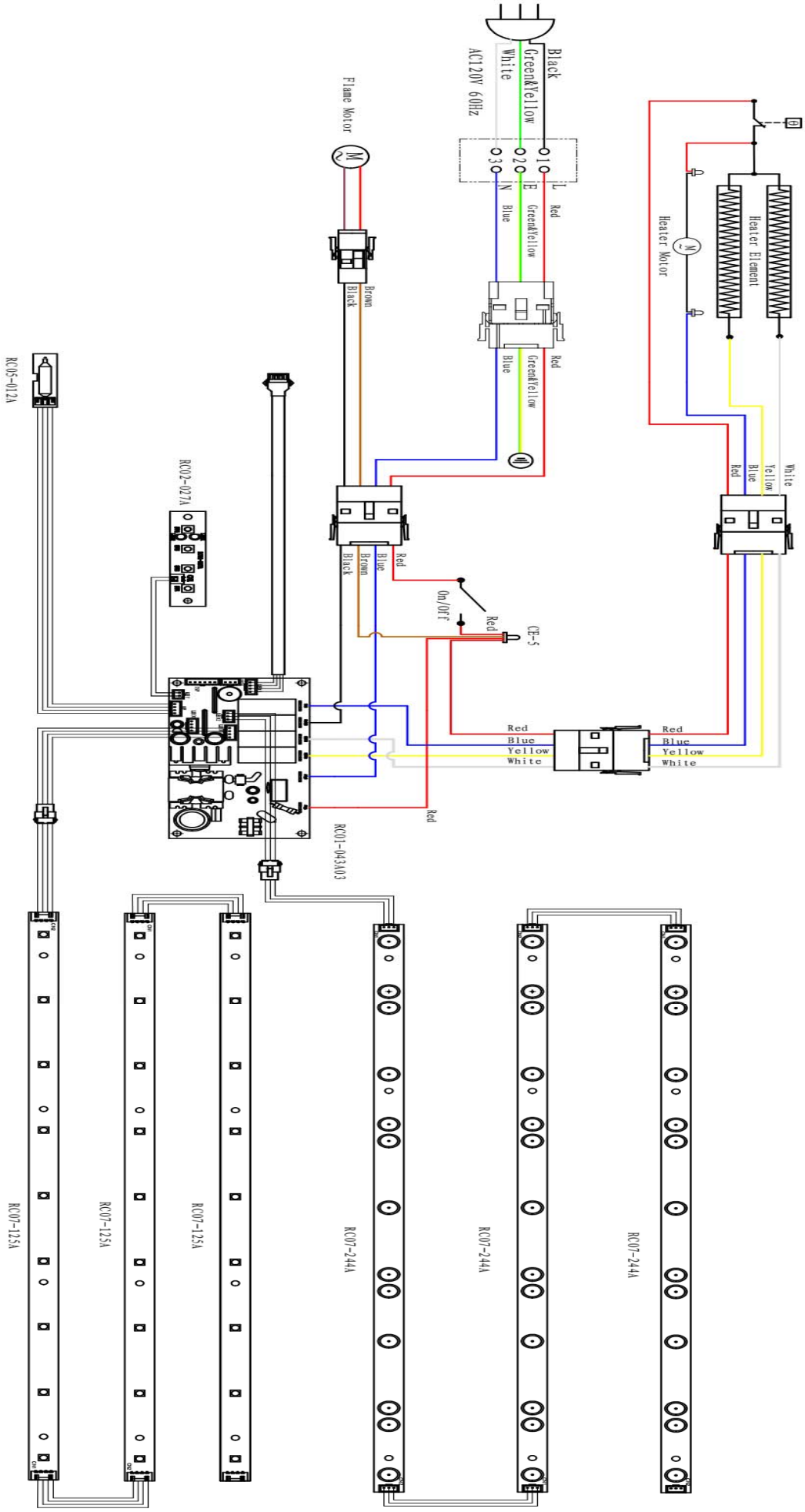
Black
Green&Yellow
White
AC120V 60Hz
L
E
N
Red
Green&Yellow
Blue
Flame Motor
Brown
Black
Heater Element
Heater Motor
White
Yellow
Blue
Red
On/Off
CE-5
Red
Blue
Yellow
White
RC01-043A03
RC02-027A
RC05-012A
RC07-125A
RC07-125A
RC07-125A
RC07-244A
RC07-244A
RC07-244A

SECTION 3 OPERATING INSTRUCTIONS

1. Manual Control Panel

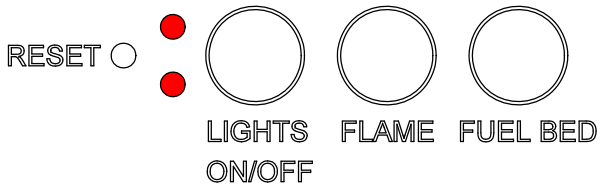

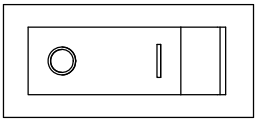

BUTTON	FUNCTION	ACTION & INDICATION
	ON: Turns on the standby mode. Enables all of the functions and remote control. **OFF**: Turns off all of the fireplace functions, and disables remote control.	Turn the main power switch on. A long “beep” will be heard when the switch is turned at ON Position “I”.
LIGHTS ON/off	It is used to close and open the main flame, the fire, the light, the false wood, the charcoal bed; The key is opened when the state of no memory is in the state of the initial state; When you have a memory state, open the key and open the memory	The buzzer is "beep". The charcoal red light flickered.
FLAME	Cycles through 4 levels of flame settings. Keep pressing for 3 seconds to turn off the “beep” sound for buttons and remote control.	Cycle through 4 levels of flame settings.
FUEL BED	Cycles through 15 levels of fuel bed settings.	Cycles through 15 levels of fuel bed settings.
RESET	Keep pressing for 3 seconds until three “beep” sound,then press the power button of remote in 10 seconds， to matches remote and fireplace.	
heating Indicator lamp	For heating instructions	In the case of heating, fire, charcoal bed and light light work, the indicator lights out after 10 seconds, and other keys can be awakened. The light is always on when all the lights, such as fire, charcoal bed and light light, are closed when heating is heated. Background lights are not associated.

2. Remote Control

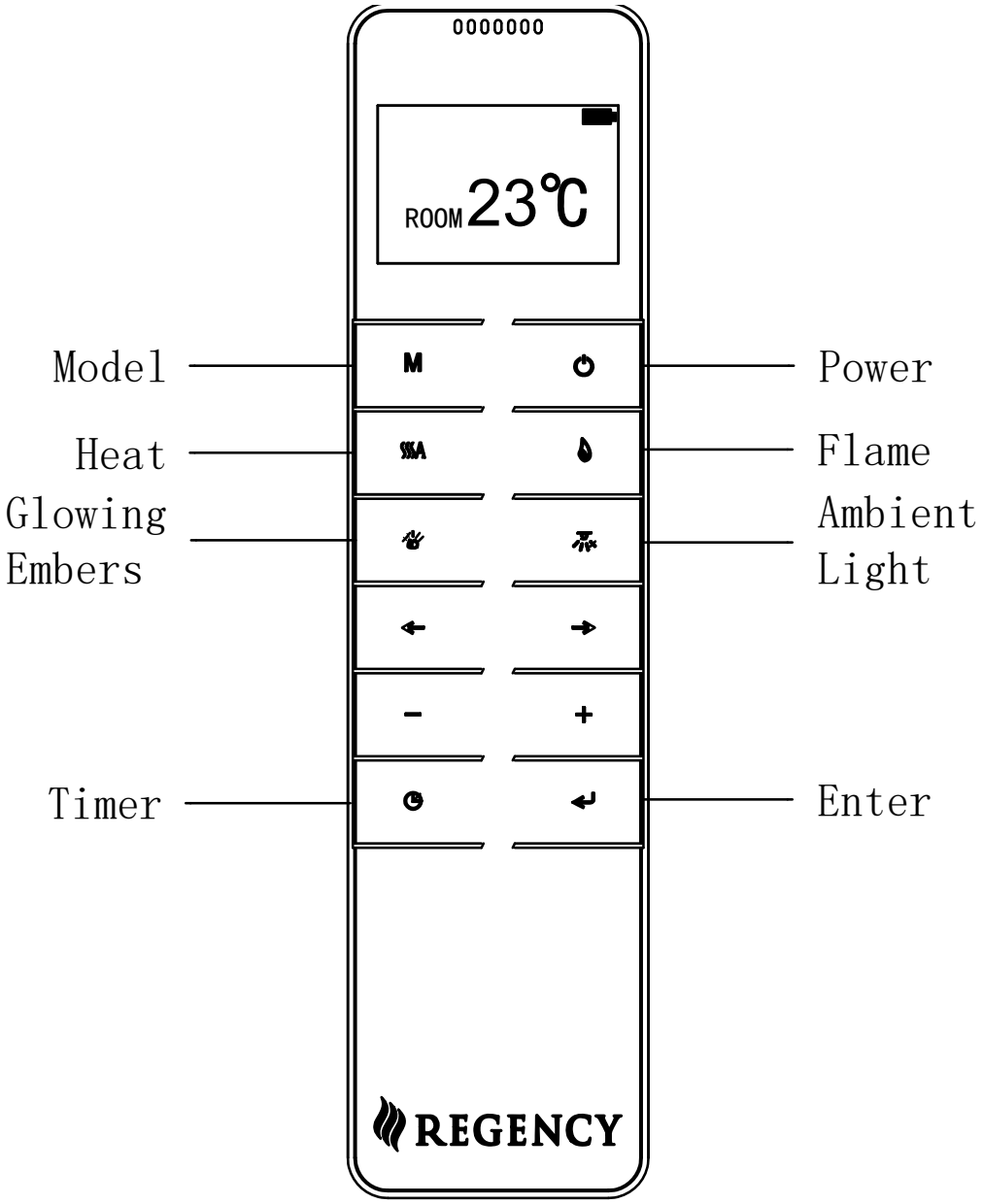

ICON	TITLE	FUNCTION
M	MODEL	To switch the heating control mode: General- Heating-Daily-Timing Heating-Weekly- Timing-Heating
	POWER	The POWER button will turn the fireplace on, and enter standby mode. This will turn on/off all the functions at once but will hold the settings in memory.
	FLAME	Press the button to enter the flame effect adjustment screen, press '←' and '→' button to cycle through Flame A - Flame B - Flame C - off. Press '+' and '-' button to adjust the brightness from 1-100%, total six settings including off.

	GLOWING EMBERS	Press the button to enter the GLOWING EMBERS settings, press '←' and '→' button to cycle through red - ember - yellow - green – cyan - blue – purple – white – 13 colour cycling - off. Press '+' and '-' button to adjust the brightness from 1-100%, total six settings including off.
	AMBIENT LIGHT	Press the button to enter the AMBIENT LIGHT settings, and the setting will cycle through cold white, white, warm white, light ember, ember, yellow, gold yellow, red, green, cyan, blue, light purple, purple, 13 colour cycling and off. Press '+' and '-' button to adjust the brightness from 0-100%, total six settings including off.
	HEATING	Press the button, and the heater will cycle the heat setting: ON -Off.
	TIMER	Press the button to set the desired time for the fireplace to run. The Timer can be set 0.5H, 1.0H, and then each hour up to 9.0H.
	ENTER	Used to determine related patterns
	-	Press the '←' and '→' button to choose different settings such as the colour settings of the corresponding function.
	-	Press the '+' and '-' button to increase or decrease the settings such as the light setting.

CARE AND MAINTENANCE

ALWAYS turn the heater **OFF** and **unplug the power cord from the outlet** before cleaning, performing maintenance, or moving this fireplace. Failure to do so could result in **electric shock, fire, or personal injury**.

Cleaning

NEVER immerse in water or **spray with water.** Doing so could result in **electric shock, fire, or personal injury.**

Metal:

- Buff using a soft cloth, slightly dampened with a citrus oil-based product.
- **DO NOT** use brass polish or household cleaners as these products will damage the metal trim.

Glass:

- Use a good quality glass cleaner and dry thoroughly with a paper towel or lint-free cloth.
- **NEVER** use abrasive cleansers, liquid sprays, or any cleaner that could scratch the surface.

Plastic:

- Wipe gently with a slightly damp cloth and a mild solution of dish soap and warm water.
- **NEVER** use abrasive cleansers, liquid sprays, or any cleaner that could scratch the surface.

Vents:

- Use a vacuum or duster to remove dust and dirt from the heater and vent areas.
- Clean the exterior of the fireplace with a slightly damp cloth or duster.

Maintenance

Risk of electric shock! **DO NOT OPEN! No user-serviceable parts inside!**

ALWAYS turn the heater **OFF** and **unplug the power cord from the outlet** before cleaning, performing maintenance, or moving this fireplace. Failure to do so could result in **electric shock, fire, or personal injury**.

Electrical and Moving Parts:

- The fan motors are lubricated at the factory and will not require lubrication.
- Electrical components are integrated in the fireplace and are not serviceable by the consumer.

Storage:

- Store heater in a clean dry place when not in use.

Replacement parts:

- Use only replacement parts supplied by the manufacturer. Use of any other parts, or modifying the fireplace in any way, will void all warranties.
- No internal parts are replaceable or serviceable.

Cleaning

NEVER immerse in water or **spray with water.** Doing so could result in **electric shock, fire, or personal injury.**

Metal:

- Buff using a soft cloth, slightly dampened with a citrus oil-based product.
- **DO NOT** use brass polish or household cleaners as these products will damage the metal trim.

Glass:

- Use a good quality glass cleaner and dry thoroughly with a paper towel or lint-free cloth.
- **NEVER** use abrasive cleansers, liquid sprays, or any cleaner that could scratch the surface.

Plastic:

- Wipe gently with a slightly damp cloth and a mild solution of dish soap and warm water.
- **NEVER** use abrasive cleansers, liquid sprays, or any cleaner that could scratch the surface.

Vents:

- Use a vacuum or duster to remove dust and dirt from the heater and vent areas.
- Clean the exterior of the fireplace with a slightly damp cloth or duster.

Maintenance

Risk of electric shock! DO NOT OPEN! No user-serviceable parts inside!

ALWAYS turn the heater **OFF** and **unplug the power cord from the outlet** before cleaning, performing maintenance, or moving this fireplace. Failure to do so could result in **electric shock, fire, or personal injury**.

Electrical and Moving Parts:

- The fan motors are lubricated at the factory and will not require lubrication.
- Electrical components are integrated in the fireplace and are not serviceable by the consumer.

Storage:

- Store heater in a clean dry place when not in use.

Replacement parts:

- Use only replacement parts supplied by the manufacturer. Use of any other parts, or modifying the fireplace in any way, will void all warranties.
- No internal parts are replaceable or serviceable.

This product is not allowed to be placed at will, which shall be collected and collected handling

This device complies with part 15 of the FCC Rules. Operation is subject to the following two conditions: (1) This device may not cause harmful interference, and (2) this device must accept any interference received, including interference that may cause undesired operation.

FCC warning:
Any Changes or modifications not expressly approved by the party responsible for compliance could void the user's authority to operate the equipment.

Note: This equipment has been tested and found to comply with the limits for a Class B digital device, pursuant to part 15 of the FCC Rules. These limits are designed to provide reasonable protection against harmful interference in a residential installation. This equipment generates uses and can radiate radio frequency energy and, if not installed and used in accordance with the instructions, may cause harmful interference to radio communications. However, there is no guarantee that interference will not occur in a particular installation. If this equipment does cause harmful interference to radio or television reception, which can be determined by turning the equipment off and on, the user is encouraged to try to correct the interference by one or more of the following measures:

-Reorient or relocate the receiving antenna.
-Increase the separation between the equipment and receiver.
-Connect the equipment into an outlet on a circuit different from that to which the receiver is connected.
-Consult the dealer or an experienced radio/TV technician for help.

The device has been evaluated to meet general RF exposure requirement. The device can be used in portable exposure condition without restriction.