ODCK110 WD

TURNTABLE WITH CD/MP3 PLAYER, DOUBLE CASSETTE DECK, PLL RADIO, AUX IN, CLOCK ALARM, REMOTE CONTROL, BLUETOOTH AND USB/SD ENCODING

INSTRUCTION MANUAL

READ THIS INSTRUCTION MANUAL CAREFULLY BEFORE USE

PRODUCT FEATURES

- 33/45/78 RPM SELECTABLE TURNTABLE
- AUTOMATIC / MANUAL STOP TURNTABLE
- BELT DRIVEN SYSTEM
- BLUETOOTH WIRELESS MUSIC STREAMING WITH NFC
- PRORAMMABLE CD/MP3 PLAYER
- DOUBLE CASSETTE DECK
- DIRECT USB/SD ENCODING FOR CD, TURNTABLE, CASSETTE, FM RADIO & AUX IN
- AUX IN FOR CONNECTION OF OTHER DEVICE (EG. CD & MP3 PLAYER)
- USB/SD SLOT FOR MP3 PLAYBACK
- PLL RADIO WITH PRESET 20 AM & 30 FM STATIONS
- CLOCK ALARM
- TIMER TO SWITCH ON AND OFF
- LCD DISPLAY WITH BLUE BACKLIGHT
- RCA LINE-OUT
- EXTERNAL SPEAKER
- 45RPM ADAPTOR, EXTERNAL POWER ADAPTOR & REMOTE CONTROL

LOCATION OF CONTROL

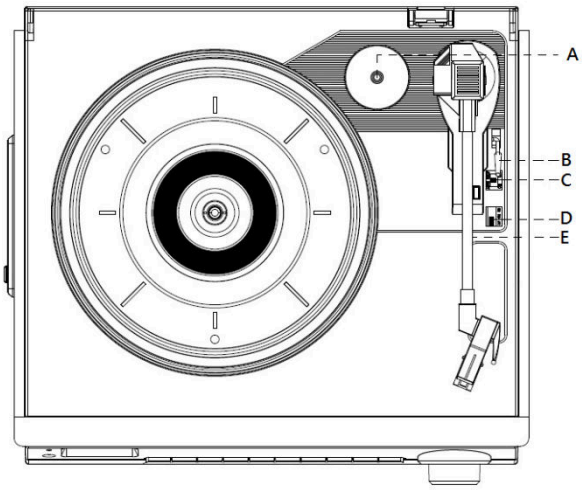

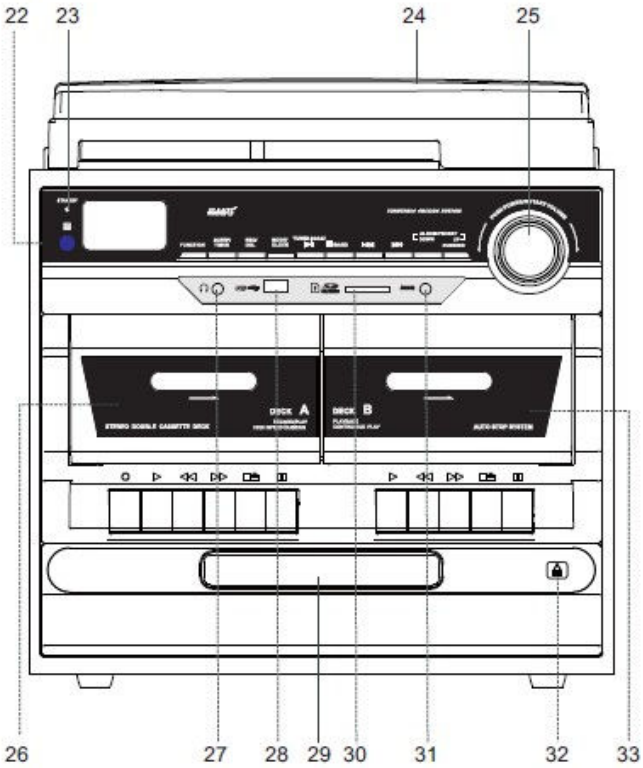

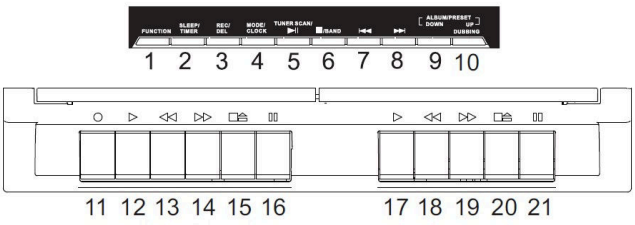

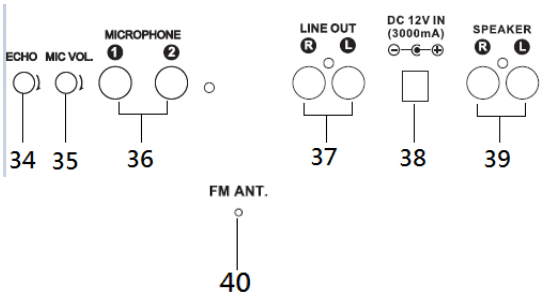

A) 45 RPM ADAPTOR
B) LIFT LEVER (FOR RECORD PLAY / PAUSE)
C) AUTO STOP ON/OFF BUTTON
D) 33/45/78 RPM SPEED SELECTOR
E) TONE ARM

1) FUNCTION
2) SLEEP / TIMER
3) REC / DEL
4) MODE / CLOCK
5) PLAY/PAUSE▶II BUTTON & TUNER SCAN
6) STOP ■ & BAND BUTTON
7) SKIP DOWN⏮ BUTTON
8) SKIP UP⏭ BUTTON
9) ALBUM / PRESET DOWN
10) ALBUM / PRESET UP / DUBBING
11) CASSETTE DECK A – RECORD
12) CASSETTE DECK A – PLAY
13) CASSETTE DECK A – FAST REWIND
14) CASSETTE DECK A – FAST FORWARD
15) CASSETTE DECK A – STOP / EJECT
16) CASSETTE DECK A – PAUSE
17) CASSETTE DECK B – PLAY
18) CASSETTE DECK B – FAST REWIND
19) CASSETTE DECK B – FAST FORWARD
20) CASSETTE DECK B – STOP / EJECT
21) CASSETTE DECK B – PAUSE

22) REMOTE CONTROL RECEIVER
23) STANDBY INDICATOR
24) DUST COVER
25) POWER / VOLUME KNOB
26) CASSETTE DECK A DOOR
27) EARPHONE JACK
28) USB SLOT
29) CD DOOR
30) SD SLOT
31) AUX IN JACK
32) CD DOOR BUTTON2 – CD DOOR
33) CASSETTE DECK B DOOR

34) MICROPHONE ECHO CONTROL
35) MICROPHONE VOLUME CONTROL
36) MICROPHONE JACK 1 & 2
37) LINE-OUT JACK
38) EXTERNAL POWER ADAPTOR JACK
39) SPEAKER BOX CONNECTION RCA JACK
40) FM WIRE ANTENNA

CAUTION:
USAGE OF CONTROLS OR ADJUSTMENTS OR PERFORMANCE OF PROCEDURES OTHER THAN THOSE SPECIFIED HEREIN MAY RESULTE IN HAZARDOUS RADIATION EXPOSURE.
THIS UNIT SHOULD NOT BE ADJUSTED OR REPAIRED BY ANYONE EXCEPT QUALIFIED SERVICE PERSONNEL.

WARNING:
- THE APPARATUS SHALL NOT BE EXPOSED TO DRIPPING OR SPLASHING AND THAT NO OBJECTS FILLED WITH LIQUIDS, SUCH AS VASES, SHALL BE PLACED ON THE APPARATUS.

- BATTERIES (BATTERY PACK OR BATTERIES INSTALLED) SHALL NOT BE EXPOSED TO EXCESSIVE HEAT SUCH AS SUNSHINE, FIRE OR THE LIKE.
- THE MAINS PLUGS OR AN APPLIANCE COUPLER IS USED AS THE DISCONNECT DEVICE, AND THE DISCONNECT DEVISE SHALL REMAIN READILY OPERABLE.

PRECAUTIONS FOR USE

INSTALLATION

- UNPACK ALL PARTS AND REMOVE PROTECTIVE MATERIAL.
- DO NOT CONNECT THE UNIT TO THE MAINS BEFORE CHECKING THE MAINS VOLTAGE AND BEFORE ALL OTHER CONNECTIONS HAVE BEEN MADE.
- DO NOT COVER ANY VENTS AND MAKE SURE THAT THERE IS A SPACE OF SEVERAL CENTIMETERS AROUND THE UNIT FOR VENTILATION.

CONNECTION

1. CONNECT **EXTERNAL POWER ADAPTOR** TO **EXTERNAL POWER ADAPTOR JACK**
2. PUSH THE **POWER KNOB** TO SWITCH ON THE UNIT, **STANDBY INDICATOR** WILL BE OFF. IF THE BACKLIGHT ON THE LCD DISPLAY LIGHTS UP, IT MEANS THE POWER SUPPLY IS NORMAL, NOW YOUR SYSTEM IS READY FOR USE.

SETTING THE CLOCK

1 WHEN THE **STANDBY INDICATOR** LIGHT UP, UNIT IS IN THE STANDBY MODE.

2 DURING STANDBY MODE, SELECT BETWEEN 12H OR 24H MODE: PRESS AND HOLD **MODE BUTTON** FOR 3-5 SECONDSS, 12H / 24H WILL BE FLASHING. PRESS **SKIP UP** OR **SKIP DOWN** BUTTON TO SELECT 12H / 24H MODE. PRESS **MODE BUTTON** AGAIN TO CONFIRM.

3 SETTING HOUR: PRESS **SKIP UP** OR **SKIP DOWN** BUTTON TO SELECT THE CORRECT HOUR, THEN PRESS **MODE BUTTON** AGAIN TO CONFIRM.

4 SETTING MINUTE: AFTER STEP 3 IS COMPLETED, PRESS **SKIP UP** OR **SKIP DOWN** BUTTON TO SELECT THE CORRECT MINUTE, THEN PRESS **MODE BUTTON** AGAIN TO CONFIRM.

SETTING ALARM

1. DURING STANDBY MODE, HOLD **TIMER BUTTON** FOR 3-5 SECONDS. SETTING ALARM SEQUENCE IS “ALARM ON TIME > ALARM OFF TIME > ALARM MODE > ALARM VOLUME”.

2. SETTING ALARM ON TIME: “ON” IS LIGHTING ON THE DISPLAY
   i. SETTING HOUR: PRESS **SKIP UP** OR **SKIP DOWN** BUTTON TO SELECT THE CORRECT HOUR, THEN PRESS **TIMER BUTTON** AGAIN TO CONFIRM.
   ii. SETTING MINUTE: PRESS **SKIP UP** OR **SKIP DOWN** BUTTON TO SELECT THE CORRECT MINUTE, THEN PRESS **TIMER BUTTON** AGAIN TO CONFIRM.

3. SETTING ALARM OFF TIME: “OFF” IS LIGHTING ON THE DISPLAY:
   i. SETTING HOUR: PRESS **SKIP UP** OR **SKIP DOWN** BUTTON TO SELECT THE CORRECT HOUR, THEN PRESS **TIMER BUTTON** AGAIN TO CONFIRM.
   ii. SETTING MINUTE: PRESS **SKIP UP** OR **SKIP DOWN** BUTTON TO SELECT THE CORRECT MINUTE, THEN PRESS **TIMER BUTTON** AGAIN TO CONFIRM.

4. SETTING ALARM MODE: “TUNE” IS LIGHTING UP ON THE DISPLAY:
   i. PRESS **SKIP UP** OR **SKIP DOWN** BUTTON TO SELECT THE ALARM MODE.
   ii. SEQUENCE IS TUNE > CD > USB > SD, PRESS **TIMER BUTTON** AGAIN TO CONFIRM.

5. SETTING ALARM VOLUME: “V - ” IS LIGHTING UP ON THE DISPLAY:
   i. PRESS **SKIP UP** OR **SKIP DOWN** BUTTON TO SELECT THE ALARM VOLUME, PRESS **TIMER BUTTON** AGAIN TO CONFIRM.

6. SETTING ALARM IS COMPLETED, THE DISPLAY WILL SHOW THE SETTING AGAIN FOR USER’S CHECKING

7. “CLOCK” ICON IS FLASHING WHEN ALARM IS IN ACTIVE. “CLOCK” ICON LIGHTS UP WHEN ALARM IS SETTING IS STORED BUT NOT IN ACTIVE YET.

8. CANCEL ALARM: DURING STANDBY MODE, WHEN “CLOCK” ICON IS ON, PRESS **TIMER BUTTON**, “CLOCK” ICON WILL BE OFF.

SNOOZE FUNCTION

PRESS “SNOOZE” BUTTON ON THE REMOTE CONTROL WHEN ALARM IN ACTIVE, ALARM WILL BE SLIENT FOR 10 MINUTES. AFTER 10-MINUTUE SNOOZE INTERVAL, ALARM WILL BE ACTIVE AGAIN. SNOOZE CAN BE USED FOR REPEATEDLY WITHIN THE 1-HOUR ALARM ACTIVE INTERVAL.

TIMER FUNCTION

1. PUSH THE **POWER KNOB** TILL THE **STANDBY INDICATOR** LIGHT OFF. UNIT IS TURNING FROM STANDBY MODE TO OPERATION MODE.
2. WHEN THE UNIT IS TURNED ON, PRESS SLEEP BUTTON (3) REPEATEDLY TO CHOOSE THE SLEEP TIME MINUTES FROM 90>80>70…..>10 OFF.
3. SLEEP TIME SETTING IS STORED WHEN THE “SLEEP” ICON LIGHTS UP ON THE DISPLAY.
4. WHEN THE SLEEP TIME MINUTES IS OVER, UNIT WILL BE SWITCHED TO STANDBY MODE AUTOMATICALLY.

LISTENING TO RADIO

RADIO TUNING

1. PRESS **FUNCTION BUTTON** TO SELECT “TUNE” MODE.
2. SELECT THE DESIRED BAND BY RADIO **BAND BUTTON** (AM OR FM).
3. TUNE TO THE REQUIRED STATION BY PRESSING **SKIP UP OR SKIP DOWN** BUTTON FOR 1-2 SECONDS, AND THEN RELEASE.
4. THE UNIT WILL START SEEKING AUTOMATICALLY AND STOP WHEN A RADIO STATION IS FOUND.

MANUAL PRESET RADIO STATIONS

1. WHEN THE DESIRED RADIO STATION IS FOUND, PRESS **MODE** BUTTON, PROGRAM NUMBER WILL BE FLASHING.
2. PRESS **PRESET UP OR PRESET DOWN** TO CHOOSE THE PROGRAM NUMBER FOR STORING THE DESIRED RADIO STATION.
3. PRESS **MODE** BUTTON AGAIN TO CONFIRM, PROGRAM NUMBER WILL STOP TO FLASH.
4. REPEAT STEP 2 & 3 UNTIL ALL DESIRED RADIO STATIONS IS BEING FOUND AND STORED
5. PRESS **PRESET UP OR PRESET DOWN** TO CHOOSE THE PRESET RADIO STATIONS.
6. THE NUMBER OF STATIONS CAN BE FOUND AND STORED IS DEPENDED ON THE RECEPTION OF DIFFERENT AREA AND COUNTRIES.

AUTO PRESET RADIO STATIONS

1. DURING RADIO MODE, PRESS THE **PLAY/PAUSE** BUTTON, THE UNIT WILL AUTOMATICLLY SCAN THE RADIO FREQUENCY. WHEN THE CLEAR SIGNAL IS FOUND, IT WILL AUTOMATICALLY STORE THE RADIO STATION, STARTING FROM PROGRAM NUMBER 1.
2. THE NUMBER OF STATIONS CAN BE FOUND AND STORED IS DEPENDED ON THE RECEPTION OF DIFFERENT AREA AND COUNTRIES.

FM & FM-STEREO RECEPTION

- PRESS “FM ST.” BUTTON ON THE REMOTE CONTROL TO SELTECT FM MONO OR FM STEREO MODE. WHEN STEREO SIGNAL ARE WEAK. IT IS PREFERABLE TO RECEIVE THE PROGRAM IN MONO.
- “ST” ICON LIGHT UP ON THE DISPLAY TO SHOW FM STEREO MODE IS RECEIVING.

HINTS FOR BETTER RECEPTIO

1. AM: THERE IS A BUILT-IN AM BAR ANTENNA. IF AM RECECPTION IS WEAK, SLIGHTLY ROTATING OR RE-POSITIONING OF THE UNIT WILL USUALLY IMPROVE THE AM RECEPTION.
2. FM : THE RECEIVER HAS A BUILT-IN FM WIRE ANTENNA HANGING AT THE REAR CABINET. THIS WIRE SHOULD BE TOTALLY UNRAVELED AND EXTENDED FOR BEST RECEPTION.

FM & FM-STEREO RADIO ENCODING

1. PRESS **FUNCTION** BUTTON TO SELECT “TUNE” MODE AND SELECT THE DESIRED BAND BY RADIO **BAND** BUTTON (AM OR FM).
2. INSERT MEMORY DEVICE (USB DRIVE, SD OR MMC CARD)
3. PRESS THE **REC** BUTTON, IT WILL TAKE 3-5 SECONDS TO READ MEMORY DEVICE. THEN USB OR SD ICON WILL BE FLASHING.
4. PRESS **SKIP UP ⏭ OR SKIP DOWN ⏮** BUTTON TO SELECT DESIRED MODE (USB OR SD) FOR ENCODING. THEN PRESS THE **REC** BUTTON AGAIN TO CONFIRM. AND THE SYSTEM IS STARTING THE ENCODING MODE AFTER FEW SECONDSS.
5. IF ONLY USB DRIVE, SD OR MMC CARD IS INSERTED, STEP 4 CAN BE SKIPPED.
6. THE USB OR SD ICON WILL BE FLASHING ON THE DISPLAY DURNIG ENCODING.
7. TO FINISH ENCODING, PRESS **STOP ■** BUTTON AND DISPLAY WILL SHOW “END” AND RETURN TO “ TUNER” MODE.

REMARK:-

- THE RECORDING SPEED IS 1:1 AND ACCORDING TO THE ACTUAL PLAYING TIME OF FM OR FM-ST RADIO
- THE RECORDING FORMAT IS PRESET AT – MP3 BIT RATE : 128 KBPS
- DURING FM & FM-STEREO RADIO ENCODING, RADIO FREQEUNCY IS FXIED AND CANNOT BE TUNED

PHONO & ENCODING

NOTED:

- REMOVE THE STYLUS PROTECTOR.
- BE SURE THAT THE TONE ARM IS BEING DETACHED FROM THE TONE ARM REST BEFORE OPERATING AND RE-SECURED AGAIN AFTERWARDS.

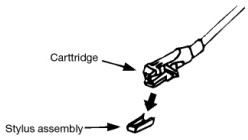

1. PRESS **FUNCTION** BUTTON TO SELECT “PHON” ON DISPLAY.
2. SET THE **SPEED SELECTOR** TO THE PROPER POSITION DEPENDING ON THE RECORD TO BE PLAYED.
3. PLACE THE RECORD ON THE PLATTER, USE THE 45 RPM ADAPTOR IF REQUIRED.
4. PUSH THE **LIFT LEVER** UPWARD TO RAISE THE TONE ARM FROM THE ARM PARK, AND THEN SLOWLY MOVE IT TO THE RECORD SIDE. THE PLATTER WILL START TO ROTATE.
5. PUT DOWN THE **LIFT LEVER** TO DROP THE TONE ARM AND TOUCH THE RECORD GENTLY. PHONO PLAYING STARTS NOW.

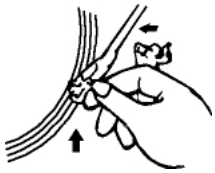

6. PUSH THE **LIFT LEVER** UPWARD TO RAISE THE TONE ARM FROM THE ARM PARK, NOW PLATTER WILL STILL BE ROTATING BUT PHONO PLAYING WILL STOP. TO CONTINUE THE PLAYING, THE USER NEEDS TO PUT DOWN THE **LIFT LEVER.**
7. ADJUST THE VOLUME TO THE DESIRED LEVEL.
8. AT THE END OF RECORD, THE PLATTER WILL AUTOMATICALLY STOP ROTATING. PUSH THE **LIFT LEVER** UPWARD TO RAISE THE TONE ARM AND MOVE IT TO THE ARM PARK, AND THEN PUT DOWN THE **LIFT LEVER**.
9. TO STOP MANUALLY, LIFT THE TONE ARM FROM THE RECORD AND RETURN IT TO THE ARM PARK.

REMARK : AS SOME KIND OF RECORD THE AUTO-STOP AREA WAS OUT OF THE UNIT SETTING, SO IT WILL STOP BEFORE THE LAST TRACK FINISHES. IN THIS CASE, SELECT THE **AUTO-STOP SWITCH** TO “ OFF “ POSITION, THEN IT WILL RUN TO THE END OF THE RECORD BUT WILL NOT STOP AUTOMATICALLY (TURN OFF THE UNIT BY POWER BUTTON OR SWITCH BACK THE **AUTO-STOP SWITCH** TO “ ON “ POSITION TO STOP THE PLATTER ROTATE). THEN PUT BACK THE TONE ARM TO THE ARM PARK.

PHONO ENCODING

1. PRESS **FUNCTION** BUTTON TO SELECT “PHON” ON DISPLAY AND THEN INSERT MEMORY DEVICE (USB DRIVE, SD OR MMC CARD).
2.PRESS THE **REC** BUTTON, IT WILL TAKE 3-5 SECONDS TO READ MEMORY DEVICE. THEN USB OR SD ICON WILL BE FLASHING.
3.PRESS **SKIP UP ⏭ OR SKIP DOWN ⏮** BUTTON TO SELECT DESIRED MODE (USB OR SD) FOR ENCODING. THEN PRESS THE **REC** BUTTON AGAIN TO CONFIRM. AND THE SYSTEM IS STARTING THE ENCODING MODE AFTER FEW SECONDSS.
4. IF ONLY USB DRIVE OR SD/MMC CARD IS INSERTED, STEP 3 CAN BE SKIPPED.
5.THE USB OR SD ICON WILL BE FLASHING ON THE DISPLAY DURNIG ENCODING.
5.TO FINISH ENCODING, PRESS **STOP ■** BUTTON AND DISPLAY WILL SHOW “END” AND RETURN TO PHONO MODE.

REMARK:-

- THE RECORDING SPEED IS 1:1 AND ACCORDING TO THE ACTUAL PLYING TIME OF THE PHONO
- THE RECORDING FORMAT IS PRESET AT – MP3 BIT RATE : 128 KBPS

CASSETTE TAPE & ENCODING

STOP / EJECT: PRESS TO STOP ALL DECK OPERATION. PRESS AGAIN TO OPEN THE CASSETTE DOOR.

FAST FORWARD: PRESS TO START, FAST FORWARD WINDING THE TAPE.

FAST REWIND: PRESS TO START, FAST REWIND WINDING THE TAPE.

PLAY: PRESS TO START PLAYING TAPE.

PAUSE: PRESS TO STOP TAPE OPERATION TEMPORARILY. PRESS AGAIN TO RESUME PLAYBACK.

RECORD: PRESS TOGETHER WITH **PLAY BUTTON** TO START TAPE RECORDING. (DECK A ONLY).

PLAYBACK
- PRESS **FUNCTION BUTTON** TO SELECT "TAPE" ON DISPLAY.
- PUT IN CASSETTE TAPE.
- PRESS **PLAY BUTTON** ON CASSETTE DECK TO START PLAYBACK.
- USE **PAUSE BUTTON** WHEN YOU WANT TO STOP PLACKBACK TEMPORARILY.
- PRESS **STOP / EJECT BUTTON** WHEN FINISHED.

RECORDING
A.RECORDING FROM TAPE (DECK B TO DECK A)
THIS UNIT ENABLE YOU TO DUPLICATE A PRE-RECORDED TAPE TO ANOTHER TAPE. IT IS PERFORMED ONLY WAY FROM DECK B (PLAYBACK) TO DECK A (PLAYBACK).

1. NORMAL SPEED RECORDING
- SELECT "TAPE" FUNCTION.
- INSERT A PRE-RECORDED CASSETTE INTO DECK B AND A BLANK CASSETTE TAPE INTO DECK A.
- PRESS **RECORD** AND **PLAY BUTTON** AT DECK A, THEN PRESS PLAY BUTTON TO START PLAYBACK AT DECK B, CASSETTE RECORDING FROM DECK B TO DECK A IS IN PROCESS.

2. HIGH SPEED RECORDING
- THIS UNIT CAN RECORD FROM DECK B TO DECK A WITH A HIGH SPEED TO SAVE THE TIME BY AROUND 2/3 COMPARED WITH NORMAL SPEED.
- PRESS **DUBBING** BUTTON BEFORE RECORDING, DISPLAY WILL SHOW "DUBB", THEN FOLLOW THE SAME PROCEDURES AS DESCRIPED IN "NORMAL SPEED RECORDING".
- A CHATTING SOUND IS BEING HEARD DURNG HIGH SPEED RECORDING. TO AVOID THIS, SET THE VOLUME TO A MINIMUM LEVEL.
- DO NOT ACTIVAE / DE-ACTIVE THE **DUBBING** BUTTON DURING HIGH SPEED RECORDING, THIS WILL VARY THE SPEED OF RECORDING AND MAY DAMAGE THE CASSETTE TAPE.

B.RECORDING FROM TURNTABLE / CD / AUX / RADIO / USB / SD
- PRESS **FUNCTION** BUTTON TO SELECT THE DESIRED MODE (TURNTABLE / CD / AUX / RADIO / USB / SD).
- PRESS **RECORD** AND **PLAY BUTTON** AT DECK A, THEN SIGNEL FROM DESIRED MODE WILL BE RECORDED IN DECK A.

C. CASSETTE TAPE RECORDING TO USB/SD
1. PRESS **FUNCTION** BUTTON TO SELECT "TAPE" ON DISPLAY AND THEN INSERT MEMORY DEVICE (USB DRIVE, SD OR MMC CARD).
2. PRESS THE **REC** BUTTON; IT WILL TAKE 5 SECONDS TO READ MEMORY DEVICE. THEN USB OR SD ICON WILL BE FLASHING.
3. PRESS **SKIP DOWN** ⏮ OR **SKIP UP** ⏭ BUTTON TO SELECT DESIRED MODE (USB OR SD) FOR RECORDING. THEN PRESS **REC** BUTTON AGAIN TO CONFIRM.
4. IF ONLY USB DRIVE OR SD/MMC CARD IS INSERTED, STEP 3 CAN BE SKIPPED.
5. DISPLAY WITH SHOW "WAI" AND THEN USB OR SD ICON WILL BE FLASHING, WHICH MEANS THE SYSTEM HAS STARTED RECORDING.
6. TO FINISH RECORDING, PRESS **REC** BUTTON AGAIN AND DISPLAY WILL SHOW "END" AND RETURN TO TAPE MODE.

AUX IN JACK & ENCODING

PRESS **FUNCTION** BUTTON TO SELECT "AUX" ON DISPLAY, THEN CONNECT THE EXTERNAL AUDIO DEVICE (SUCH AS CD PLAYER) THROUGH THE **AUX IN JACK**. AUDIO SIGNAL FROM THE EXTERNAL AUDIO DEVICE CAN BE PLAYED THROUGH THE SYSTEM.

AUX IN ENCODING
1. PRESS **FUNCTION** BUTTON TO SELECT "AUX" ON DISPLAY, THEN INSERT MEMORY DEVICE (USB DRIVE, SD OR MMC CARD)

2.PRESS THE **REC** BUTTON, IT WILL TAKE 3-5 SECONDSS TO READ MEMORY DEVICE. THEN USB OR SD ICON WILL BE FLASHING.
3.PRESS **SKIP UP ⏭ OR SKIP DOWN ⏮** BUTTON TO SELECT DESIRED MODE (USB OR SD) FOR ENCODING. THEN PRESS THE **REC** BUTTON AGAIN TO CONFIRM. AND THE SYSTEM IS STARTING THE ENCODING MODE AFTER FEW SECONDSS.
4.IF ONLY USB DRIVE OR SD/MMC CARD IS INSERTED, STEP 3 CAN BE SKIPPED.
5.THE USB OR SD ICON WILL BE FLASHING ON THE DISPLAY DURNIG ENCODING.
6.TO FINISH ENCODING, PRESS **STOP ■** BUTTON AND DISPLAY WILL SHOW "END" AND RETURN TO "AUX" MODE.

REMARK:-
- THE RECORDING SPEED IS 1:1 AND ACCORDING TO THE ACTUAL PLYING TIME OF THE EXTERNAL AUDIO DEVICE.
- THE RECORDING FORMAT IS PRESET AT – MP3 BIT RATE : 128 KBPS

PLAYBACK OF MP3/WMA SONG VIA USB STORAGE MEDIA OR MEMORY CARD

CONNECTING

THE SYSTEM IS ABLE TO DECODE AND PLAYBACK ALL MP3 / WMA FILE WHICH STORED IN THE MEMORY MEDIA WITH USB CONNECTING PORT OR SD/MMC MEMORY CARD.

1. PLUG-IN THE USB PLUG WITH THE FACE UP & MAKE SURE IT GOING INTO COMPLETELY OR INSERT THE MEMORY CARD IN THE DIRECTION OF THE ARROW AS SHOWN IN THE LABEL ON THE UNDERSIDE OF THE MEMORY CARD SLOT COVER. INSERT STRAIGHT WITHOUT BENDING.
2. CONNECTING THE USB UPSIDE DOWN OR BACKWARDS COULD DAMAGE THE AUDIO SYSTEM OR THE STORAGE MEDIA (USB THUMB DRIVE / SD/MMC CARD). CHECK TO BE SURE THE DIRECTION IS CORRECT BEFORE CONNECTION.

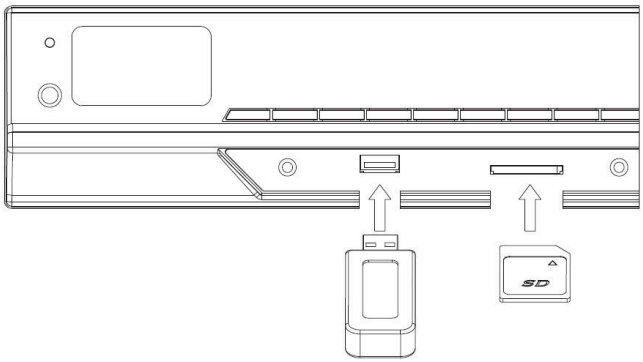

3. PRESS **FUNCTION** BUTTON TO SELECT "USB" OR "CARD" ON DISPLAY, THEN INSERT MEMORY DEVICE (USB DRIVE, SD OR MMC CARD).
4. THE SYSTEM WILL START READING THE STORAGE MEDIA AUTOMATICALLY AFTER FUNCTION SELECTION, AND DISPLAY WILL SHOW THE TOTAL NUMBER OF MP3/WMA FILES (EG. 016).
5. THEN THE SYSTEM WILL START AUDIO PLAYBACK FROM DESRIED DEVICE (USB OR SD/MMC) AUTOMATICALLY.

- **PLAY / PAUSE BUTTON ▶II**
- PRESS THE "**PLAY/PAUSE**" **▶II** BUTTON ONCE TO HALT PLAYING, PRESS IT AGAIN TO CONTINUE.

- **STOP BUTTON ■**
- PRESS **STOP ■** BUTTON TO END UP AUDIO PLAYBACK, THEN DISPLAY WILL SHOW THE TOTAL NUMBER OF MP3/WMA FILES. AND THEN USER CAN PRESS **"SKIP UP" ⏭ OR "SKIP DOWN"** ⏮ BUTTON TO SELECT FILE FORWARD OR BACKWARD.

- **SKIP UP ⏭ / SKIP DOWN ⏮ BUTTON**
- DURING MP3/WMA PLAYBACK, PRESS **SKIP UP ⏭** BUTTON ONCE TO PLAY THE NEXT FILE. PRESS AND HOLD **SKIP UP ⏭** BUTTON CONTINUOUSLY TO SPEED UP SELECTING FORWARD.
- DURING MP3/WMA PLAYBACK, PRESS **SKIP DOWN ⏮** BUTTON ONCE TO PLAY THE PREVIOUS

FILE. PRESS AND HOLD **SKIP DOWN** ⏮ BUTTON CONTINUOUSLY TO SPEED UP SELECTING BACKWARD.

- **FOLDER SEARCHING**
  PRESS **ALBUM DOWN** OR **ALBUM UP** TO SEARCH FOLDER BACKWARD OR FORWARD.

- **REPEAT FUNCTION**
  DURING AUDIO PLAYBACK, PRESS **MODE** BUTTON ONCE, SINGLE TRACK WILL BE PLAYED REPEATEDLY. PRESS **MODE** BUTTON AGAIN, IT WILL REPEATEDLY PLAY ALL TRACKS IN THE WHOLE USB DRIVE, SD OR MMC CARD.

REMARK

- IF CONNECT THE SYSTEM TO MP3 PLAYER VIA THE USB SOCKET, DUE TO VARIANCES IN MP3 ENCODING FORMAT, SOME MP3 PLAYER MAY NOT BE ABLE TO PLAY VIA THE USB SOCKET. THIS IS NOT A MALFUNCTION OF THE SYSTEM.
- THERE ARE NUMEROUS USB AND SD DEVICE PRODUCERS ARE. SOLUTION AND FORMAT ARE VARIABLE BETEEN EACH OTHER. THEREFORE, WE DO NOT GARANTTEE THIS UNIT CAN SUPPORT ALL USB AND SD DEVICE FROM EVERY BRAND.
- SD CARD CAN BE SUPPORED UP TO 8GB

TRACKS PROGRAMMING

UP TO 60 TRACKS CAN BE PROGRAMMED FOR MP3/WMA FILE AND PLAY IN ANY ORDER. BEFORE USE, BE SURE THE SYSTEM IS AT STOP MODE BEFORE PROGRAMMING:

1. SET AT “USB” OR “CARD” FUNCTION, THEN PRESS **STOP** BUTTON.
2. PRESS **MODE** BUTTON, “MEM” WILL BE FLASHING ON LCD DISPLAY. MOREOVER, IT WILL INDICATE PROGRAM NO. AND DIGITS FOR TRACK NO. TO BE PROGRAMMED.
3. SELECT A DESIRED TRACK BY PRESSING **SKIP UP** ⏭ OR **SKIP DOWN** ⏮ BUTTON. IF FOLDER SELECTION IS REQUIRED, PRESSING **ALBUM DOWN** OR **ALBUM UP** TO SEARCH FOLDER BACKWARD OR FORWARD.
4. PRESS **MODE** BUTTON TO CONFIRM AND STORE THE TRACK INTO MEMORY.
5. REPEAT STEPS 3 AND 4 TO ENTER ADDITIONAL TRACKS INTO THE MEMORY IF NECESSARY.
6. WHEN ALL THE DESIRED TRACKS HAVE BEEN PROGRAMMED, PRESS “**PLAY/PAUSE**” ▶II BUTTON TO PLAY THE TRACKS IN ASSIGNED ORDER.
7. PRESS **STOP** ■ BUTTON TO STOP PLAYING OF PROGRAMMED TRACKES, PRESS **STOP** ■ BUTTON AGAIN TO CANCEL PROGRAMMING.

COPYING OF MP3/WMA FILE

THE SYSTEM ALLOWS YOU TO COPY THE FILE FROM USB TO SD OR SD TO USB BY 1 FILE, 1 FOLDER OR ALL FILES.

I) COPY 1 TRACK

1. INSERT THE USB STORAGE MEDIA OR SD/MMC CARD, SET IN “USB” OR “CARD” MODE.
2. PRESS **REC** BUTTON DURING THE PLAYBACK OF THE COPYING TRACK, THEN “ONE” WILL BE FLASHING ON THE DISPLAY. PRESS **REC** BUTTON AGAIN TO CONFIRM.
3. THE USB OR SD ICON WILL BE FLASHING ON THE DISPLAY. COPYING IS PERFORMING NOW.
4. AFTER COMPLETING OF COPY, UNIT WILL STOP PLAYBACK AUTOMATICALLY.
5. DISPLAY WILL SHOW “END” AND BACK TO USB OR SD MODE.

II) COPY 1 FOLDER

1.INSERT THE USB STORAGE MEDIA OR SD/MMC CARD, SET IN “USB” OR “CARD” MODE & SET AT STOP MODE AFTER UNIT READING.
2. PRESS **ALBUM DOWN** OR **ALBUM UP** TO SEARCH DESIRED FOLDER FOR COPYING.
3. PRESS **REC** BUTTON, THEN “ONE” WILL BE FLASHING ON THE DISPLAY. PRESS **SKIP UP** ⏭ **/ SKIP DOWN** ⏮ BUTTON TO SELECT “DIR” ON THE DISPLAY. PRESS **REC** BUTTON AGAIN TO CONFIRM.
4. USB OR SD ICON WILL BE FLASHING ON THE DISPLAY. COPYING IS PERFORMING NOW.
5. WHEN THE USB OR SD ICON STOPS FLASHING, IT MEANS THAT THE FOLDER COPYING IS COMPLETED.

III) COPY ALL TRACK

1.INSERT THE USB STORAGE MEDIA OR SD/MMC CARD, SET IN “USB” OR “CARD” MODE & SET AT STOP MODE AFTER UNIT READING.

2. PRESS **REC** BUTTON, THEN “ONE” WILL BE FLASHING ON THE DISPLAY. PRESS **SKIP UP** ⏭ **/ SKIP DOWN** ⏮ BUTTON TO SELECT “ALL” ON THE DISPLAY. PRESS **REC** BUTTON AGAIN TO CONFIRM.
3. USB OR SD ICON WILL BE FLASHING ON THE DISPLAY. COPYING IS PERFORMING NOW.

4. WHEN THE USB OR SD ICON WILL STOP FLASHING, IT MEANS THAT ALL TRACK COPYING IS COMPLETED.

REMARK:
- IF PRESS THE **REC** BUTTON DURING PLAYBACK OF USB OR SD MODE, THE FILE WILL COPY FROM USB TO SD OR SD TO USB.

FILE DELETE FROM USB / SD CARD

THE SYSTEM IS ABLE TO ERASE THE FILE STORED INSIDE THE USB DRIVE OR SD CARD BY FOLLOWING:-

I) DELETE 1 TRACK

1. PRESS AND HOLD **DEL** BUTTON FOR 3-5 SECONDS DURING THE PLAYBACK OF THE DESIRED TRACK, THEN "ONE" WILL BE FLASHING ON THE DISPLAY. PRESS **DEL** BUTTON AGAIN TO CONFIRM.
2. "DEL" WILL BE SHOWN ON THE DISPLAY.
3. "DEL" WILL DISAPPEAR ON THE DISPLAY, IT MEANS THE TRACK IS DELETED.

II) DELETE 1 FOLDER

1. INSERT THE USB STORAGE MEDIA OR SD/MMC CARD, SET IN "USB" OR "CARD" MODE & SET AT STOP MODE AFTER UNIT READING.
2. PRESS **ALBUM DOWN** OR **ALBUM UP** TO SEARCH DESIRED FOLDER FOR DELETING.
3. PRESS AND HOLD **DEL** BUTTON FOR 3-5 SECONDS, "DEL" WILL SHOW ON THE DISPLAY. PRESS **SKIP UP ⏭ / SKIP DOWN ⏮** BUTTON TO SELECT "DIR" ON THE DISPLAY. PRESS **DEL** BUTTON AGAIN TO CONFIRM.
4. "DEL" WILL BE SHOWN ON THE DISPLAY. AFTER "DEL" DISAPPEARS IT MEANS THE DESIRED FOLDER IS DELETED.

II) DELETE ALL TRACK

1. INSERT THE USB STORAGE MEDIA OR SD/MMC CARD, SET IN "USB" OR "CARD" MODE & SET AT STOP MODE AFTER UNIT READING.
2. PRESS AND HOLD **DEL** BUTTON FOR 3-5 SECONDS, THEN "ONE" WLL BE FLASHING ON THE DISPLAY. PRESS **SKIP UP ⏭ / SKIP DOWN ⏮** BUTTON TO SELECT "ALL" ON THE DISPLAY. PRESS **DEL** BUTTON AGAIN TO CONFIRM.
3. USB OR SD ICON WILL BE FLASHING ON THE DISPLAY. DELETING IS PERFORMING NOW.
4. WHEN THE USB OR SD ICON STOPS FLASHING, IT MEANS THAT ALL TRACK COPYING IS COMPLETED.

REMARK : ALL THE FILES INSIDE THE USB STORAGE MEDIA OR SD CARD WILL BE DELETED COMPLETELY AFTER CONFIRMING TO "DEL" BUTTON.

REMOVING OF USB / MEMORY CARD

TO REMOVE THE USB / MEMORY CARD, TURN OFF THE POWER OR SWITCH THE FUNCTION MODE TO EITHER CD, AUX OR TUNER FIRST. FOR USB PORT – UN-PLUG IT BY PULLING OUT THE USB SOCKET DIRECTLY, FOR MEMORY CARD – PRESS THE MEMORY CARD INWARD & THEN RELEASE, NOW THE CARD BEING PARTIALLY EJECTED AND YOU CAN REMOVE IT BY HAND.

COMPACT DISC (CD) PLAYBACK & ENCODING

1. PRESS **FUNCTON** BUTTON TO "CD" MODE.
2. PRESS **CD DOOR BUTTON**, CD DOOR WILL BE OPENED, PUT THE CD IN THE TRAY AND PRESS CD DOOR BUTTON (21) AGAIN, CD DOOR WILL BE CLOSED.
3.THE SYSTEM WILL START READING THE CD:

- **PLAY / PAUSE BUTTON ▶II**
- PRESS THE **PLAY/PAUSE ▶II** BUTTON ONCE TO HALT PLAYING, PRESS IT AGAIN TO CONTINUE.

- **STOP BUTTON ■**
- PRESS THE **STOP ■** BUTTON TO END UP AUDIO PLAYBACK, THEN DISPLAY WILL SHOW THE TOTAL NUMBER OF TRACKS. AND THEN USER CAN PRESS **SKIP UP ⏭ / SKIP DOWN ⏮** BUTTON TO SELECT TRACKS.

- **SKIP UP ⏭ / SKIP DOWN ⏮ BUTTON**
- DURING CD PLAYBACK, PRESS **SKIP UP ⏭** BUTTON ONCE TO PLAY THE NEXT TRACK. PRESS AND HOLD **SKIP UP ⏭** BUTTON CONTINUOUSLY TO SPEED UP SELECTING FORWARD.
- DURING CD PLAYBACK, PRESS **SKIP DOWN ⏮** BUTTON ONCE TO PLAY THE PREVIOUS TRACK. PRESS AND HOLD **SKIP DOWN ⏮** BUTTON CONTINUOUSLY TO SPEED UP SELECTING BACKWARD.
-

- **FOLDER SEARCHING**
  PRESS **ALBUM DOWN** OR **ALBUM UP** TO SEARCH FOLDER BACKWARD OR FORWARD.

- **REPEAT FUNCTION**
  DURING AUDIO PLAYBACK, PRESS **MODE** BUTTON ONCE, SINGLE TRACK WILL BE PLAYED REPEATEDLY. PRESS **MODE** BUTTON AGAIN, IT WILL REPEATEDLY PLAY ALL TRACKS IN THE WHOLE CD.

TRACKS PROGRAMMING

UP TO 60 MP3 TRACKS & 30 CD AUDIO FORMAT TRACK CAN BE PROGRAMMED AND PLAYED IN ANY ORDER. BEFORE USE, BE SURE THE SYSTEM IS AT STOP MODE BEFORE PROGRAMMING:

1. PRESS **FUNCTON** BUTTON TO "CD" AND AT STOP MODE
2.PRESS THE **MODE** BUTTON, "MEM" WILL BE FLASHING ON LCD DISPLAY. MOREOVER, IT WILL INDICATE PROGRAM NO. AND DIGITS FOR TRACK NO. TO BE PROGRAMMED.
3.SELECT A DESIRED TRACK BY PRESSING **SKIP UP** ⏭ OR **SKIP DOWN** ⏮ BUTTON. FOR MP3/WMA DISC, PRESSING **ALBUM DOWN** OR **ALBUM UP** TO SEARCH FOLDER BACKWARD OR FORWARD.
4.PRESS THE **MODE** BUTTON TO STORE THE TRACK INTO MEMORY.
5.REPEAT STEPS 3 AND 4 TO ENTER ADDITIONAL TRACKS INTO THE MEMORY IF NECESSARY.
6.WHEN ALL THE DESIRED TRACKS HAVE BEEN PROGRAMMED, PRESS **PLAY/PAUSE** ▶II BUTTON TO PLAY THE TRACKS IN ASSIGNED ORDER.
7. PRESS **STOP** ■ BUTTON TO STOP PLAYING OF PROGRAMMED TRACKES, PRESS **STOP** ■ BUTTON AGAIN TO CANCEL PROGRAMMING.

COPYING OF CD

THE SYSTEM ALLOWS YOU TO COPY THE TRACK FROM CD TO USB OR SD BY 1 TRACK, 1 FOLDER OR ALL FILES.

I) COPY 1 TRACK
1.INSERT THE USB STORAGE MEDIA OR SD/MMC CARD, PRESS **FUNCTON** BUTTON TO "CD" MODE.
2.PRESS **REC** BUTTON DURING THE PLAYBACK OF THE COPYING TRACK FROM CD, THEN "ONE" WILL BE FLASHING ON THE DISPLAY. PRESS **REC** BUTTON AGAIN TO CONFIRM.
3.THE USB OR SD ICON WILL BE FLASHING ON THE DISPLAY. COPYING IS PERFORMING NOW.
4.AFTER COMPLETING OF COPY, UNIT WILL STOP PLAYBACK AUTOMATICALLY.
5.DISPLAY WILL SHOW "END" AND BACK TO CD MODE.

II) COPY 1 FOLDER (FOR MP3/WMA DISC ONLY)
1.INSERT THE USB STORAGE MEDIA OR SD/MMC CARD, SET IN CD & STOP MODE AFTER UNIT READING.
2. PRESS **ALBUM DOWN** OR **ALBUM UP** TO SEARCH FOLDER FOR COPYING.
3. PRESS **REC** BUTTON, THEN "ONE" WILL BE FLASHING ON THE DISPLAY. PRESS **SKIP UP** ⏭ / **SKIP DOWN** ⏮ BUTTON TO SELECT "DIR" ON THE DISPLAY. PRESS **REC** BUTTON AGAIN TO CONFIRM.
4. USB OR SD ICON WILL BE FLASHING ON THE DISPLAY. COPYING IS PERFORMING NOW.
5. WHEN THE USB OR SD ICON STOPS FLASHING, IT MEANS THAT THE FOLDER COPYING IS COMPLETED.

III) COPY ALL TRACK
1.INSERT THE USB STORAGE MEDIA OR SD/MMC CARD, PRESS **FUNCTON** BUTTON TO "CD" MODE.
2. PRESS **REC** BUTTON, THEN "ONE" WLL BE FLASHING ON THE DISPLAY. PRESS **SKIP UP** ⏭ / **SKIP DOWN** ⏮ BUTTON TO SELECT "ALL" ON THE DISPLAY. PRESS **REC** BUTTON AGAIN TO CONFIRM.
4. USB OR SD ICON WILL BE FLASHING ON THE DISPLAY. COPYING IS PERFORMING NOW.
5. WHEN THE USB OR SD ICON STOPS FLASHING, IT MEANS THAT ALL TRACK COPYING IS COMPLETED.

SPLIT TRACK FUNCTION FOR USB/SD RECORDING FOR TURNTABLE/CASSETTE/AUX IN

1) MANUAL SPLIT OPERATION PROCEDURE: DURING USB/SD RECORDING, THE USB/SD ICON WILL FLASH ON THE DISPLAY. IF A NEW TRACK IS REQUIRED, PRESS **MODE** BUTTON ON THE UNIT OR REMOTE CONTROL, DISPLAY WILL SHOW "TS", THEN THE UNIT WILL STOP RECORDING MOMENTARILY AND RESUME AGAIN. A NEW FILE WILL HAVE BEEN CREATED ON THE USB/SD DEVICE REPRESNTING A NEW TRACK.

2) AUTO SPLIT OPERATION PROCEDURE:
- BEFORE USB/SD RECORDING, PRESS **FUNCT** BUTTON TO SELECT AUDIO SOURCE, THEN PRESS **MODE** BUTTON ON THE UNIT OR REMOTE CONTROL, DISPLAY WILL SHOW "T-ON", WHICH MEANS THE AUTO SPLIT FUNCTION HAS ACTIVATED. THEN START USB/SD RECORDING, THE UNIT CAN AUTOMATICALLY DETECT THE SILENT PART BETWEEN EACH TRACK, AND CREATE A NEW FILE TO MOVE ON TO START RECORDING THE NEXT TRACK.

- IF NOT REQUIRED: PRESS **MODE** BUTTON ON THE UNIT OR REMOTE CONTROL BEFORE USB/SD RECORDING, DISPLAY WILL SHOW “T-OF”, WHICH MEANS AUTO SPLIT HAS BEEN DEACTIVATED.
- PLEASE NOTE FOR AUTO SPLIT: SEVERAL SECONDS OF THE BEGINNING OF THE NEXT TRACK MAY NOT BE RECORDED, AS THE UNIT MAY TAKE A FEW SECONDS TO CREATE A NEW FILE ON THE USB/SD; AND IT CAN ADDITIONALLY BE THE CASE THAT SOME MUSIC PRODUCERS INTENTIONALLY ADD SILENT SECTIONS WITHIN ONE TRACK. AS A RESULT, THIS WILL VERY LIKELY MAKE THE UNIT CONSIDER THIS SILENT PART THE BREAK BETWEEN TRACKS AND CREATE A NEW TRACK ON THE RECORDING.
- NOTE FOR AUTO SPLIT: DURING USB/SD RECORDING FROM TURNTABLE & CASSETTE, WHEN THE UNIT HAS DETECTED ANY PARTICULAR SILENT PART, THE TURNTABLE AND CASSETTE PLAYER WILL STOP MOMENTARILY. THE TURNTABLE AND CASSETTE PLAYER WILL RESUME OPERATION ONCE THE USB/SD DEVICE HAS BEGUN CREATING A NEW FILE TO BE RECORDED.

BLUETOOTOOTH CONNECTION

- PRESS AND HOLD **FUNCTION** BUTTON TILL LCD SHOWS “BT”, THEN THE UNIT IS READY FOR CONNECTION WITH YOUR BLUETOOH DEVICE (SUCH AS MOBILE PHONE).
- SWITCH ON THE BLUETOOTH FUNCTION OF YOUR BLUETOOH DEVICE, AND SELECT “ODCK110 WD” BLUETOOTH EQUIPMENT FOR CONNECTION.
- AFTER YOUR BLUETOOH DEVICE IS CONNECTED WITH THE UNIT VIA BLUETOOTH, START TO PLAYBACK YOUR DEVICE.
- THIS UNIT HAS NFC FUNCTION WHICH CAN ALLOW YOUR BLUETOOH DEVICE (SUCH AS MOBILE PHONE) CONNECTING WITH THE UNIT AUTOMATICALLY.
  - SWITCH ON THE BLUETOOTH AND NFC FUNCTION OF YOUR DEVICE, THEN PUT IT NEAR THE “BT/N” LOGO WITHIN 5MM ON THE FRONT PANEL. YOUR DEVICE CAN AUTOMATICALLY SEACH AND CONNECT WITH THE UNIT.
  - TO DISCONNECT WITH THE UNIT, PUT YOUR DEVICE NEAR THE “BT/N” LOGO WITHIN 5MM ON THE FRONT PANEL AGAIN.

EARPHONE JACK & LINE OUT SOCKET

- THIS SYSTEM CAN BE CONNECTED WITH HEADPHONE OR EXTERNAL AMPLIFIER / SPEAKER BY 3.5MM **EARPHONE JACK**.
- THIS SYSTEM CAN BE CONNECTED WITH EXTERNAL DEVICE (EG. AMPLIFIER AND SPEAKER) BY **LINE-OUT SOCKET** AT REAR CABINET.

MICROPHONE JACK

- THIS SYSTEM CAN BE CONNECTED WITH 6.3MM MICROPHONE FOR KARAOK FUNCTION.
- MICROPHONE CAN BE CONNECTED WITH **MICROPHONE JACK 1** AND **MICROPHONE JACK 2**.
- **MICROPHONE VOLUME CONTROL** TO CONTROL MICROPHONE VOLUME; **MICROPHONE ECHO CONTROL** FOR CONTROL MICROPHONE ECHO LEVEL.

POWER SAVING FEATURE:

To save energy, if there is no audio signal from CD / Turntable / Cassette / AUX IN / USB / SD for a period of over 10 minutes, then the unit will automatically switch to Standby Mode.

REMOTE CONTROL

BATTERY INSTALLATION

THE INFRA-RED TRANSMITTER REQUIRES 1 PC CR2025 LITHUM BATTERY FOR OPERATION

BUTTON DESCRIPTION

1 **STANDBY:** TRIGGER BETWEEN STANDBY MODE AND OPERATION MODE.
2 **PRESET/ALBUM DN:** PERFORM SAME FUNCTION AS "**ALBUM DOWN / PRESET DOWN**" BUTTON ON THE UNIT.
3 **PRESET/ALBUM UP:** PERFORM SAME FUNCTION AS "**ALBUM UP / PRESET UP**" BUTTON ON THE UNIT.
4 **TIMER / SLEEP:** PERFORM SAME FUNCTION AS "**SLEEP / TIMER**" BUTTON ON THE UNIT.
5 **MUTE**: TO MUTE AUDIO PLAYBACK.
6 **OP/CL & SNOOZE**: OPEN AND CLOSE THE CD DOOR; SNOOZE FUNCTION FOR ALARM.
7 **REC/DEL:** PERFORM SAME FUNCTION AS "**REC/DEL**" BUTTON ON THE UNIT.
8 **FM ST.**: SELECT BETWEEN FM STEREO AND MONO RADIO
9 **FUNCT**: PERFORM SAME FUNCTION AS "**FUNCTION**" BUTTON ON THE UNIT.
10 **MODE/CLOCK**: PERFORM SAME FUNCTION AS "**MODE/CLOCK**" BUTTON ON THE UNIT.
11 **▶II (PLAY/PAUSE):** PERFORM SAME FUNCTION AS "**▶II PLAY/PAUSE**" BUTTON ON THE UNIT.
12 **■ (STOP)/BAND:** PERFORM SAME FUNCTION AS "**■ STOP / BAND**" BUTTON ON THE UNIT.
13 **I◀◀ (SKIP DOWN):** PERFORM SAME FUNCTION AS "**I◀◀ SKIP DOWN** " BUTTON ON THE UNIT. BESIDES, IT CAN BE USED FOR RADIO FREQUENCY SEARCHING DURING TUNER MODE.
14 **▶▶I (SKIP UP):** PERFORM SAME FUNCTION AS "**▶▶I SKIP UP**" BUTTON ON THE UNIT. BESIDES, IT CAN BE USED FOR RADIO FREQUENCY SEARCHING DURING TUNER MODE.
15 **VOLUME +/- :** CONTROL VOLUME LEVEL.

FCC Warning Statement

Changes or modifications not expressly approved by the party responsible for compliance could void the user’s authority to operate the equipment. This equipment has been tested and found to comply with the limits for a Class B digital device, pursuant to Part 15 of the FCC Rules. These limits are designed to provide reasonable protection against harmful interference in a residential installation. This equipment generates uses and can radiate radio frequency energy and, if not installed and used in accordance with the instructions, may cause harmful interference to radio communications. However, there is no guarantee that interference will not occur in a particular installation. If this equipment does cause harmful interference to radio or television reception, which can be determined by turning the equipment off and on, the user is encouraged to try to correct the interference by one or more of the following measures:

- Reorient or relocate the receiving antenna.
- Increase the separation between the equipment and receiver.
- Connect the equipment into an outlet on a circuit different from that to which the receiver is connected.
- Consult the dealer or an experienced radio/TV technician for help.

This device complies with part 15 of the FCC Rules. Operation is subject to the following two conditions: (1) This device may not cause harmful interference, and (2) this device must accept any interference received, including interference that may cause undesired operation.

RF Exposure Statement

To maintain compliance with FCC's RF Exposure guidelines, This equipment should be installed and operated with minimum distance of 20cm the radiator your body. This device and its antenna(s) must not be co-located or operation in conjunction with any other antenna or transmitter.