Draft Copy
11 March 2019

MPS Card Reader

User Guide

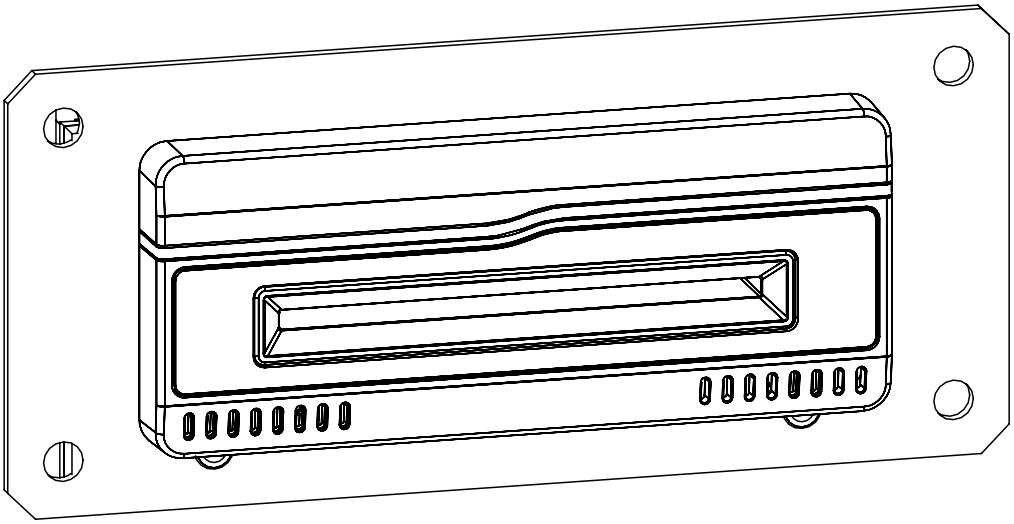

SG GAMING

Bally Barcrest Shuffle Master WMS

11 March 2019 **SY-TP009200[B]**

Original Instructions: All non-English editions of this document are translations of the original instructions.
CONFIDENTIAL

All ® notices signify marks registered in the United States. The look and feel of the games described and displayed herein and the individual components and displays of such games are trade dress of Scientific Games Corp. and its Subsidiaries.

© 2019 Scientific Games Corp. and its Subsidiaries. All rights reserved. Unauthorized Distribution Prohibited. Confidential.

Scientific Games Corporation
6601 Bermuda Road
Las Vegas, Nevada 89119, USA
1 855 777 7435 (Toll Free)
1 702 897 7150
http://www.scientificgames.com

This document ("Document") has been provided to you by Scientific Games Corporation or one or more of its directly or indirectly wholly owned companies (collectively, "Scientific Games"). This Document contains a variety of: (a) materials and other items relating to products or services of Scientific Games or its licensors or other third parties, including layout, information, text and scripts, data, files, images, photographs, pictures, artwork, designs, graphics, logos, drawings, charts, button icons, instructions, illustrations, advertising copy, technology, interactive features, "look and feel," and the compilation, assembly and arrangement of the materials of the Document, and copyrightable material; (b) service marks, trademarks, logos, trade names and trade identities of Scientific Games or its licensors or third parties, when applicable; and (c) other forms of intellectual property (all of the foregoing in (a), (b) and (c), collectively, "Content"). This Document and the Content are owned or controlled by Scientific Games or its licensors or third parties, when applicable. All right, title, and interest in and to the Content is the property of Scientific Games or its licensors, when applicable, and is protected by the intellectual property laws of the United States and elsewhere to the fullest extent possible. All ® notices signify marks registered in the United States by Scientific Games or its licensors, when applicable. Scientific Games grants the intended recipient a limited, non-exclusive, revocable, non-assignable, personal, and non-transferable license to view and/or print one copy of the Content, but Scientific Games or its licensors, as the case may be, retain ownership of such Content. The foregoing limited license does not provide the intended recipient with any ownership of, or any other intellectual property interest in, any Content and this license may be immediately suspended or terminated for any reason, by Scientific Games in its sole discretion, and without advance notice or liability.

This Document has been provided to you solely for use in operating the product described herein. The specifications and information contained in this documentation are subject to change without notice. All statements, information, illustrations, specifications and recommendations in this documentation are believed to be accurate, but are provided without warranty of any kind, express or implied. The product information referenced in this Document is being provided by Scientific Games as is.

Draft Copy
11 March 2019

Contents

Preface 4
Revision History 4
Reference Information 4
Contact Information 4
Preventing Injury and Damage 4
Environmental Protection and Recycling 5
Legal Notice 5
Compliance 5
FCC ID: 2AQ8B-1494712 5
IC: 24390-1494712 6
RF Radiation Hazard Warning 6
Industry Canada Notice and Marking 6
MPS Card Reader Installation 7
Overview 7
Instructions 7
Front Bezel Installation 7
Rear Board Installation 9
Card Reader Body Installation 11
Body-to-Bezel Cable Installation 13
USB Cable Installation 14
Appendix 15
Operation Properties 15
Power Output 15
Operating Frequency 15
Operating Channel 15
Operating Mode 15
Data Rate 15
Intended Use 15
Antenna Gain 15
Block Diagram 16
RF Schematic 17

© 2019 Scientific Games Corp. and its Subsidiaries. All rights reserved. Unauthorized Distribution Prohibited. CONFIDENTIAL

Draft Copy
11 March 2019

Preface

Revision History

- Rev. A, 07 February 2019 - Initial release
- Rev. B, 11 March 2019 - Updated *Industry Canada Notice and Marking* to specify compliant components; added Bluetooth Antenna and U16 NFC frequency to *Block Diagram*

Reference Information

Revocation Bulletins, Service Manuals, and other documents are available online at https://www.sggaming.com/members/login. To request a login and password, select **Request New Login**.

Contact Information

Region		Telephone	Email
Americas		+ 1 877 748 3387	techsupportgames@scientificgames.com
Asia	Macau	853 625 22559	techsupport.macau@scientificgames.com
	Singapore	65 8522 7465	
Australia/New Zealand	Australia	1 800 837 668	techsupport.au@scientificgames.com
	New Zealand	0800 476 321	
Europe/Middle East/Africa (EMEA)		+34 93 594 87 20	techsupport.emea@scientificgames.com

Preventing Injury and Damage

- Preventing Shock: Always remove power from the machine before starting any service tasks.
- Preventing ESD: Always use appropriate ESD mitigation procedures.
- Replacing the Power Cord: If the Power Cord is damaged, it must be replaced by the manufacturer (Scientific Games Corporation), its service agent, or similarly qualified persons to avoid a hazard.
- Properly Secure and Vent All Equipment: Before starting any service tasks, the cabinet, top or accessory box, and machine must be correctly secured and installed, with adequate ventilation, as described in the corresponding product manual or guide to avoid injury and equipment damage.
- Ladder Safety: Follow all company mandated ladder safety procedures. Do not exceed the maximum load rating of a ladder. Be aware of the ladder load rating and of the weight it is supporting, including the weight of any tools or equipment.

© 2019 Scientific Games Corp. and its Subsidiaries. All rights reserved. Unauthorized Distribution Prohibited. CONFIDENTIAL

Draft Copy
11 March 2019

Environmental Protection and Recycling

This product bears a recycling mark in accordance with the *Waste from Electrical Electronic Equipment (WEEE) European Commission Directive 2012/19/EU*. This mark indicates that the product should be deposited at an appropriate facility to enable recovery and recycling in accordance with all applicable laws. To identify an environmentally sound disposal method for this product or its component parts, please contact the responsible government authority in your area. For information on available product take-back programs, see our websites https://www.sggaming.com/Customer-Center/Games-Support/WEEE-Directive or http://www.scientificgames.com.

Legal Notice

© 2019 Scientific Games Corporation. All Rights Reserved.

This Product Manual ("Manual") has been provided to you by Scientific Games Corporation or one or more of its directly or indirectly wholly owned companies (collectively, "Scientific Games"). This Manual and the contents therein are owned or controlled by Scientific Games or its licensors or third parties, when applicable. All right, title and interest in and to the content is the property of Scientific Games or its licensors or suppliers, when applicable, and is protected by the intellectual property laws of the United States and elsewhere to the fullest extent possible. All notices signify marks registered in the United States by Scientific Games or its licensors or suppliers, when applicable.

This Manual has been provided to you solely for use in operating the applicable product in the manner described herein. Unauthorized or improper use of the product is expressly prohibited. The specifications and information contained in this documentation are subject to change without notice. All statements, information, illustrations, specifications and recommendations in this documentation are believed to be accurate, but are provided without warranty of any kind, express or implied. The product referenced in this document is being provided by Scientific Games as is.

Scientific Games Corporation
6601 Bermuda Road, Las Vegas, NV 89119, USA
Phone: (702) 897-7150 or (877) 462-2559
Outside the US Phone: (702) 532-6865
Fax: (702) 897-2284
www.scientificgames.com
www.sggaming.com

Compliance

FCC ID: 2AQ8B-1494712

The equipment has been tested and found to comply with the limits for a Class B Digital Device, pursuant to part 15 of the FCC Rules. These limits are designed to provide reasonable protection against harmful interference in a residential installation. This equipment uses, generates and can radiate radio frequency energy and, if not installed and used in accordance with the instruction, may cause harmful interference to radio communication. However, there is no guarantee that interference will not occur in a particular installation. If this equipment does cause harmful interference to radio or television reception, which can be determined by turning the equipment off and on, the user is encouraged to try to correct the interference by one or more of the following measures:

- Reorient or relocate the receiving antenna.
- Increase the separation between the equipment and receiver.
- Connect the equipment into an outlet on a circuit different from that to which the receiver is connected.

- Consult the dealer or an experienced radio/TV technician for help.

Operation is subject to the following two conditions:

1. This device may not cause interference.
2. This device must accept any interference, including interference that may cause undesired operation of the device.

NOTE

To comply with the FCC RF exposure compliance requirements, no change to the antenna or the device is permitted. Any change to the antenna or the device could result in the device exceeding the RF exposure requirements and void user's authority to operate the device.

NOTE

To comply with FCC/IC RF exposure compliance requirements, a separation distance of at least 20 cm must be maintained between the antenna of this device and all persons. This device must not be co-located or operating in conjunction with any other antenna or transmitter.

IC: 24390-1494712

RF Radiation Hazard Warning

To ensure compliance with FCC and Industry Canada RF exposure requirements, this device must be installed in a location where the antennas of the device will have a minimum distance of at least 20 cm from all persons. Using higher gain antennas and types of antennas not certified for use with this product is not allowed. The device shall not be co-located with another transmitter.

Installez l'appareil en veillant à conserver une distance d'au moins 20 cm entre les éléments rayonnants et les personnes. Cet avertissement de sécurité est conforme aux limites d'exposition définies par la norme CNR-102 at relative aux fréquences radio.

Industry Canada Notice and Marking

This device contains license-exempt transmitter(s)-receiver(s) that comply with Innovation, Science and Economic Development Canada's license-exempt RSS(s).

Operation is subject to the following two conditions:

1. This device may not cause interference
2. This device must accept any interference, including interference that may cause undesired operation of the device.

Cet appareil contient des émetteur(s)-récepteur(s) exempts de licence et conformes aux Spécifications des normes radioélectriques exempts de licence d'Innovation, Sciences et Développement économique Canada.

Son fonctionnement est sujet aux deux conditions suivantes:

1. *Le dispositif ne doit pas produire de brouillage préjudiciable.*
2. *Ce dispositif doit acceptertout brouillage reçu, y compris un brouillag e susceptible de provoquer un fonctionnement indésirable.*

© 2019 Scientific Games Corp. and its Subsidiaries. All rights reserved. Unauthorized Distribution Prohibited. CONFIDENTIAL

Draft Copy
11 March 2019

MPS Card Reader Installation

Overview

This document details how to install the MPS Card Reader in an Electronic Gaming Machine (EGM).

To correctly install the MPS Card Reader, complete these processes in order:

1 *Front Bezel Installation* on page 7
2 *Rear Board Installation* on page 9
3 *Card Reader Body Installation* on page 11
4 *Body-to-Bezel Cable Installation* on page 13
5 *USB Cable Installation* on page 14

Instructions

Front Bezel Installation

1 Place the MPS Front LED and NFC Assembly, Figure 1 (A), onto the Player Tracking Panel, Figure 1 (B), using the indicated holes, Figure 1 (C), as guides.

Figure 1 MPS Front LED and NFC Assembly with Player Tracking Panel

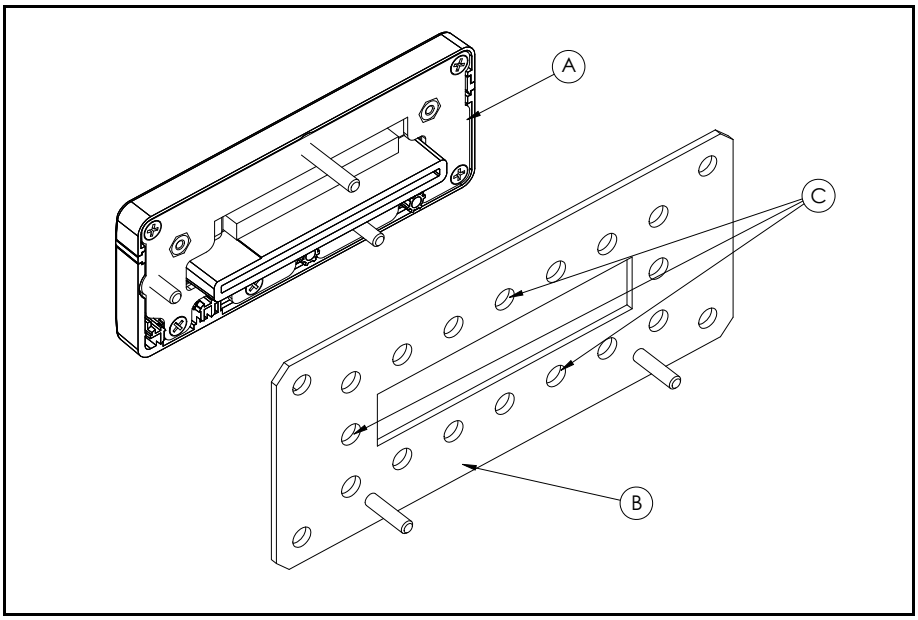

© 2019 Scientific Games Corp. and its Subsidiaries. All rights reserved. Unauthorized Distribution Prohibited. CONFIDENTIAL

Draft Copy
11 March 2019

2 Secure the Player Tracking Panel to the MPS Front LED and NFC Assembly's standoffs, Figure 2 (A), with three 4-40 Nuts, Figure 2 (B), using a 1/4-inch nut driver.

Figure 2 MPS Front LED and NFC Assembly with Player Tracking Panel and 4-40 Nuts

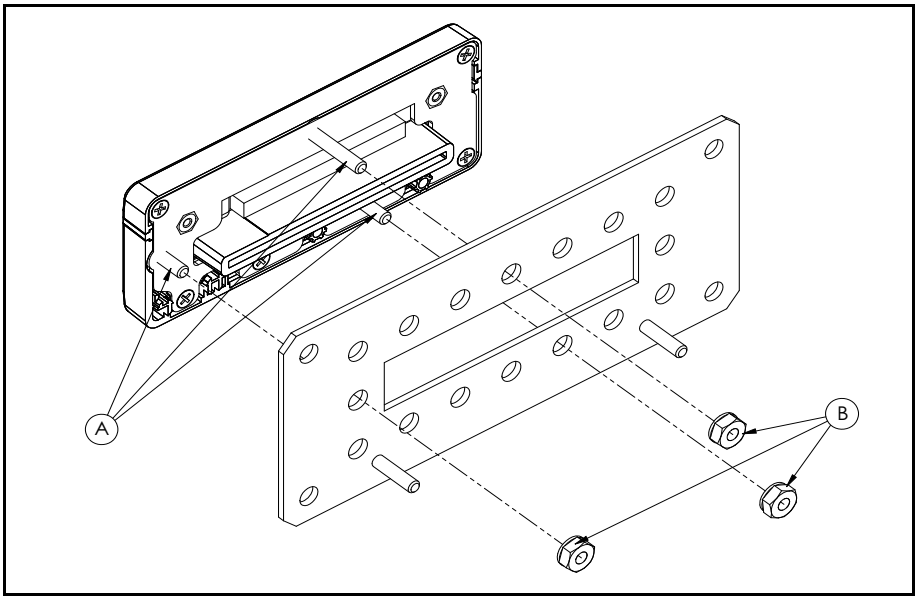

Figure 3 Front Bezel Assembly

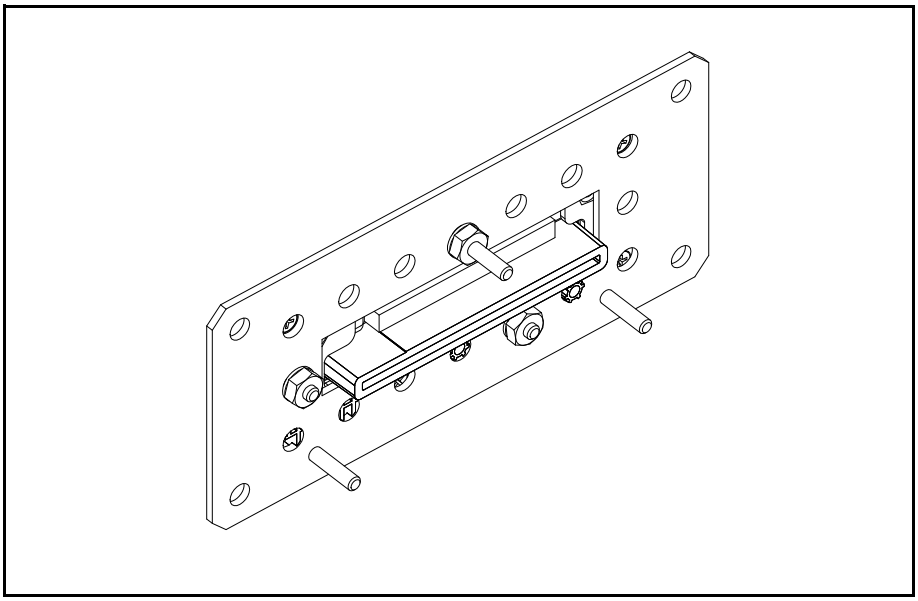

© 2019 Scientific Games Corp. and its Subsidiaries. All rights reserved. Unauthorized Distribution Prohibited. CONFIDENTIAL

Draft Copy
11 March 2019

Rear Board Installation

Align the Rear Board, Figure 4 (A), with the Front Bezel Assembly and attach them by applying even force at their 40-pin connectors, Figure 5 (A) and Figure 6 (A).

Figure 4 Front Bezel Assembly Aligned with Rear Board

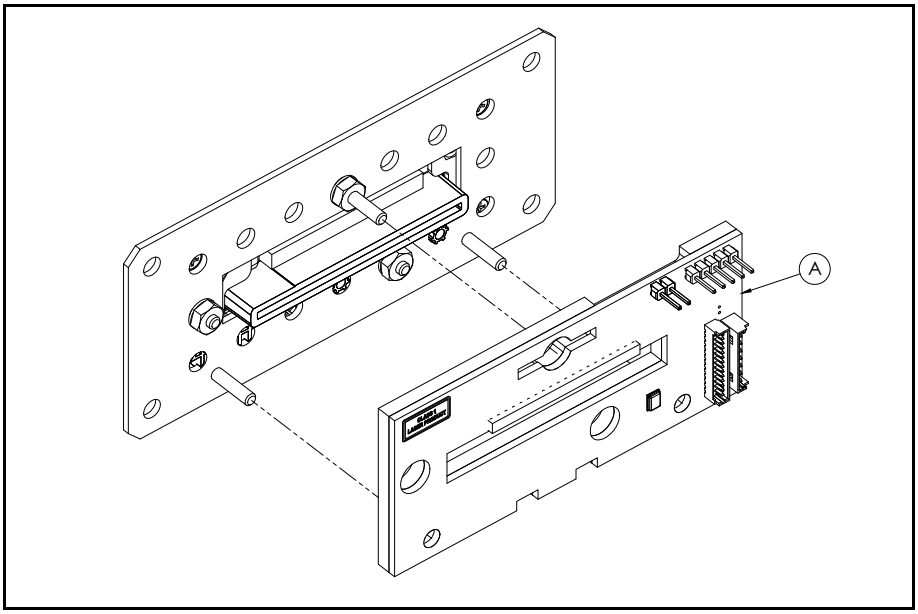

Figure 5 40-pin Connector on MPS Front LED and NFC Assembly

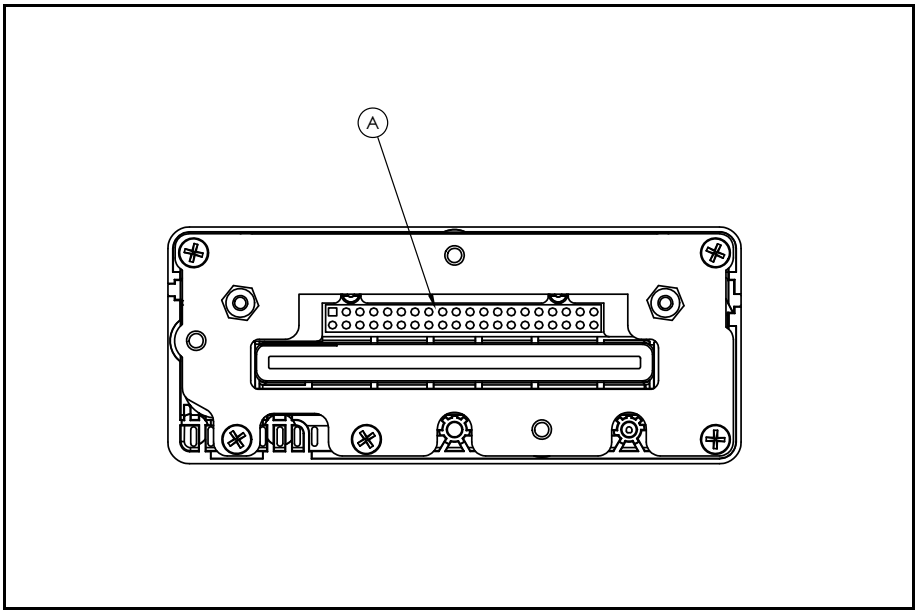

© 2019 Scientific Games Corp. and its Subsidiaries. All rights reserved. Unauthorized Distribution Prohibited. CONFIDENTIAL

Draft Copy
11 March 2019

Figure 6 40-pin Connector on Solder Side of Rear Board

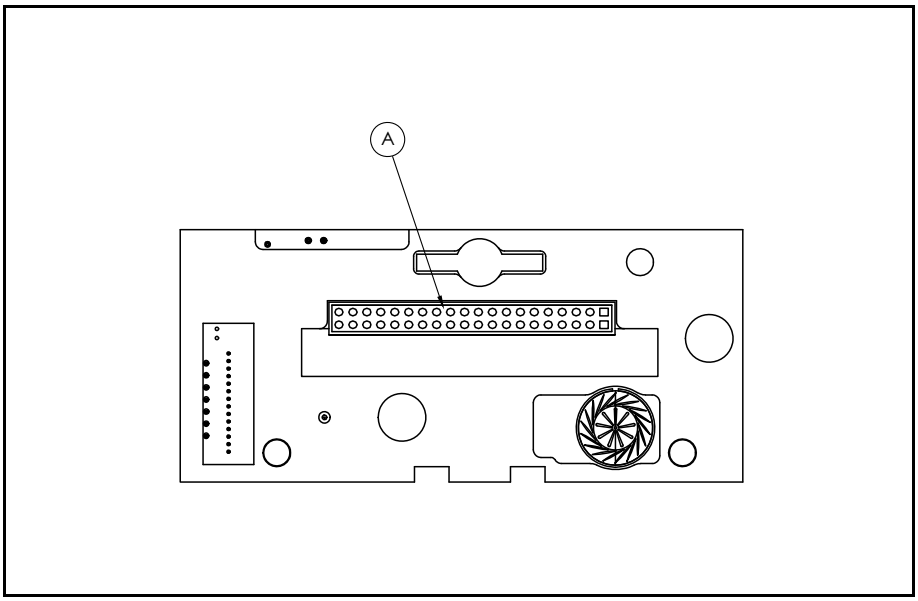

Figure 7 Front Bezel and Rear Board Assembly

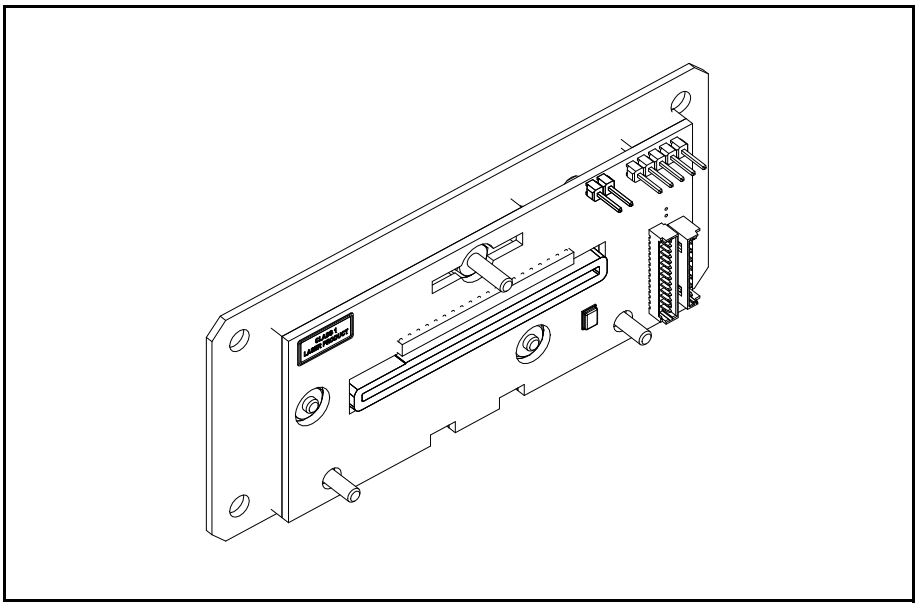

© 2019 Scientific Games Corp. and its Subsidiaries. All rights reserved. Unauthorized Distribution Prohibited. CONFIDENTIAL

Draft Copy
11 March 2019

Card Reader Body Installation

1. Align the three holes on the Adaptor Bezel, Figure 8 (A), of the Card Reader Body with the three standoffs, Figure 8 (B), protruding from the Front Bezel and Rear Board Assembly.

Figure 8 Front Bezel and Rear Board Assembly Aligned with Card Reader Body

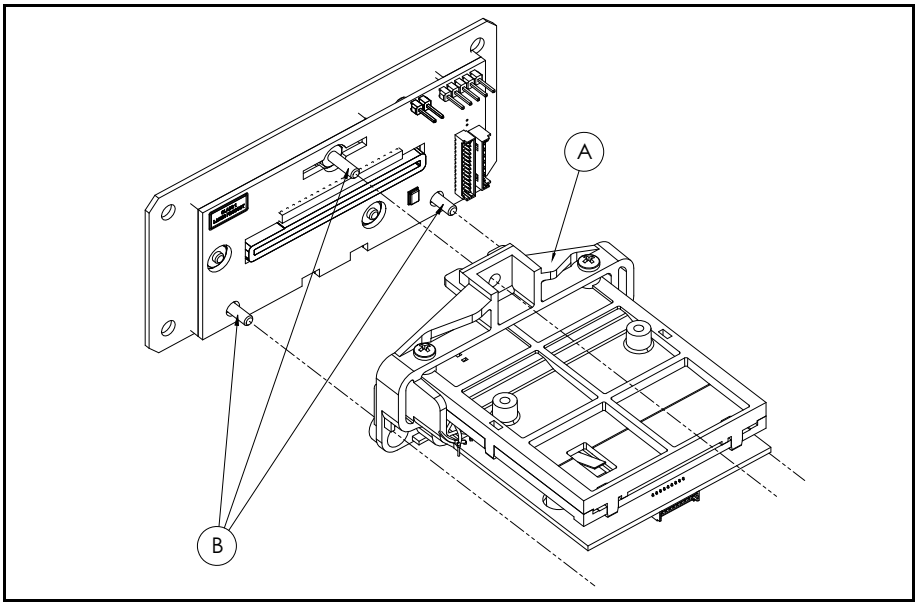

2. Secure the top standoff of the Front Bezel and Rear Board Assembly to the top of the Adaptor Bezel of the Card Reader Body with one 4-40 Nut using a 1/4-inch nut driver.

CAUTION

Do not over-tighten the 4-40 Nut. This could warp the Front Bezel and Rear Board Assembly and cause the Card Reader Body to sit unevenly.

Figure 9 Top of Front Bezel and Rear Board Assembly Attaching to Top of Card Reader Body

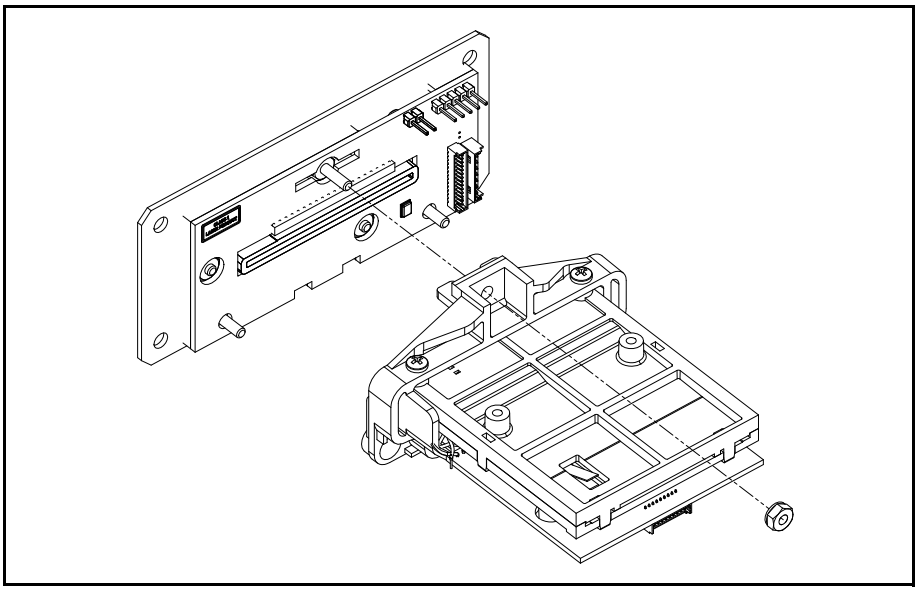

© 2019 Scientific Games Corp. and its Subsidiaries. All rights reserved. Unauthorized Distribution Prohibited. CONFIDENTIAL

Draft Copy
11 March 2019

3 Secure the two bottom standoffs of the Front Bezel and Rear Board Assembly to the bottom of the Adaptor Bezel of the Card Reader Body with two Collar Nuts, Figure 10 (A), using a 1/4-inch nut driver.

CAUTION

Do not over-tighten the Collar Nuts. This could bend the Rear Board and break its traces.

Figure 10 Bottom of Front Bezel and Rear Board Assembly Attaching to Bottom of Card Reader Body

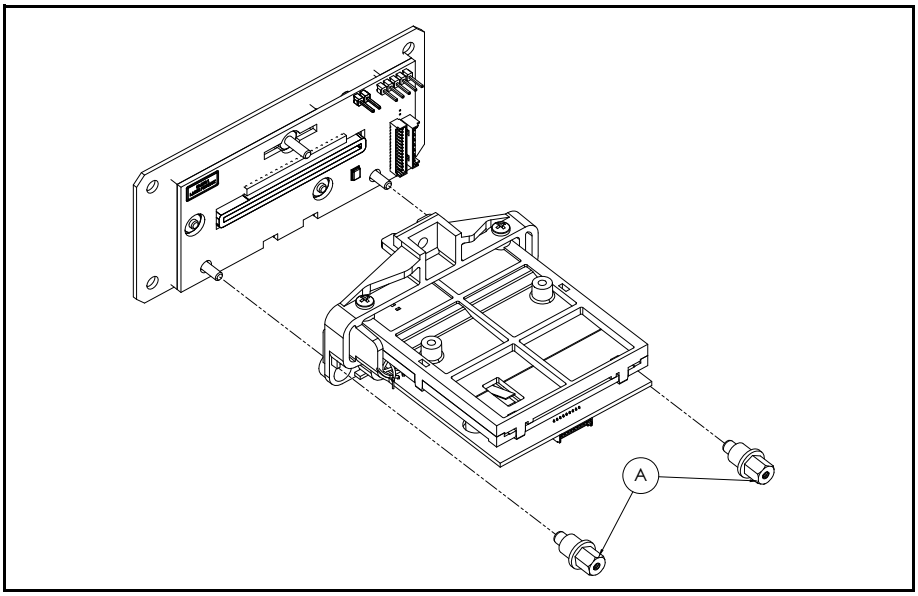

Figure 11 MPS Card Reader Assembly without Cables

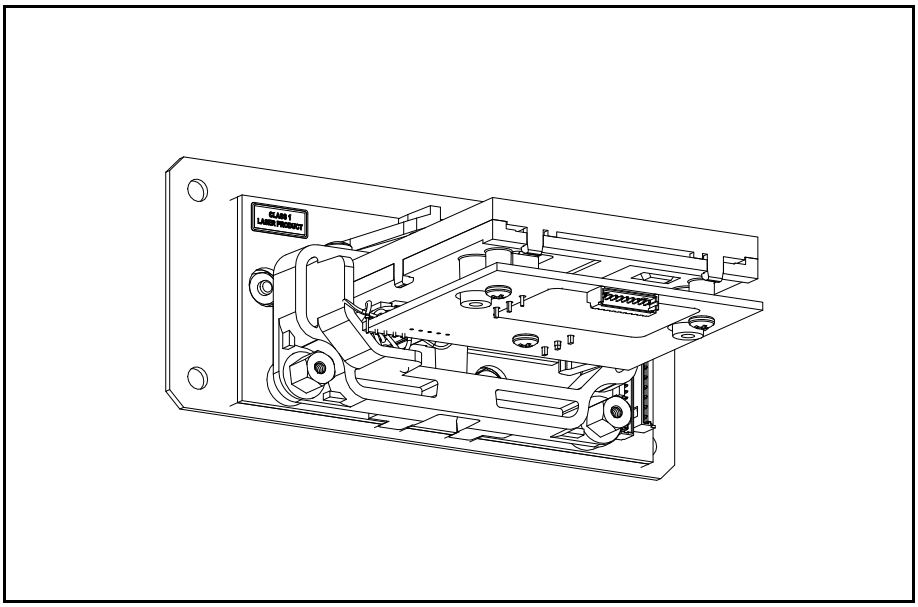

© 2019 Scientific Games Corp. and its Subsidiaries. All rights reserved. Unauthorized Distribution Prohibited.

Body-to-Bezel Cable Installation

NOTE

Use one hand to stabilize the Card Reader Body. This will help prevent it from bending.

1. Insert either of the 14-pin connectors, Figure 12 (A), from the Body-to-Bezel Cable into the 14-pin connector, Figure 12 (B), at the rear of the MPS Card Reader Assembly.

Figure 12 MPS Card Reader Assembly and Body-to-Bezel Cable

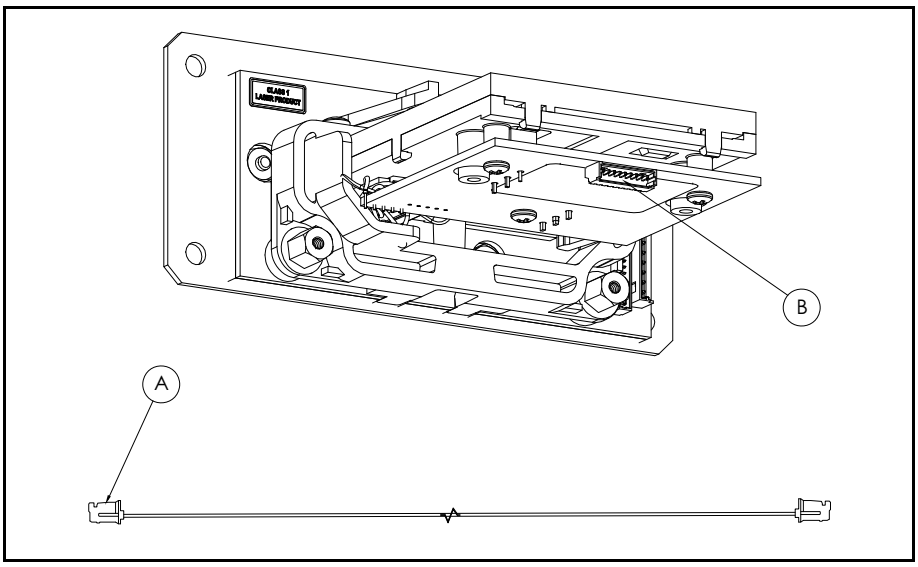

2. Insert the other connector of the Body-to-Bezel Cable into the 14-pin connector, Figure 13 (A), on the Rear Board of the MPS Card Reader Assembly.
   - Gently and evenly apply pressure to the Body-to-Bezel Cable connector while inserting it to prevent the Rear Board from bending.

Figure 13 14-pin Connector on Rear Board

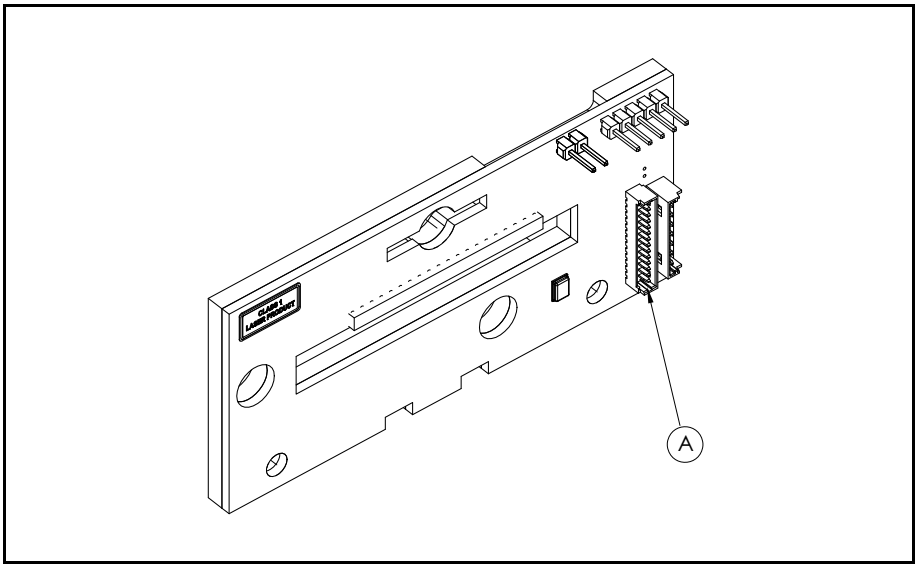

© 2019 Scientific Games Corp. and its Subsidiaries. All rights reserved. Unauthorized Distribution Prohibited. CONFIDENTIAL

Draft Copy
11 March 2019

USB Cable Installation

1. Insert the 7-pin connector, Figure 14 (A), of the USB Cable into the 7-pin connector, Figure 14 (B), on the Rear Board of the MPS Card Reader Assembly.
   - Gently and evenly apply pressure to the USB Cable connector while inserting it to prevent the Rear Board from bending.

Figure 14 MPS Card Reader Assembly and 7-pin Connector of USB Cable

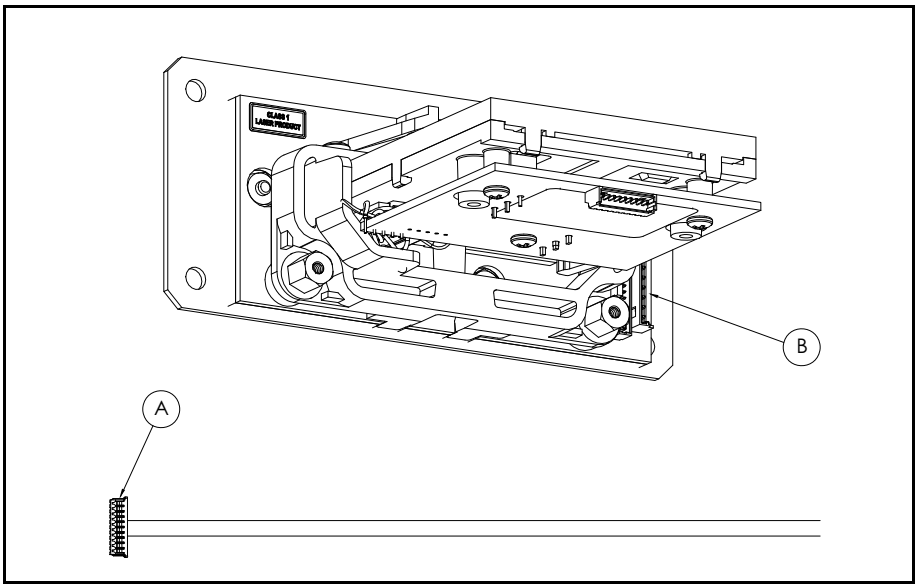

2. Insert the USB-A connector of the USB Cable into an available USB port on the powered-off MC400 Game Monitoring Unit.

Figure 15 Finished Installation

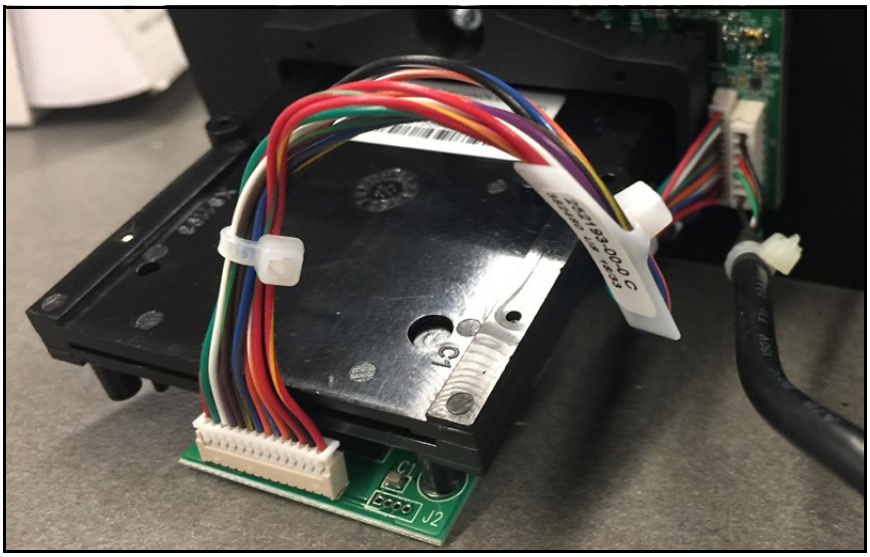

© 2019 Scientific Games Corp. and its Subsidiaries. All rights reserved. Unauthorized Distribution Prohibited.

Draft Copy
11 March 2019

Appendix

Operation Properties

Power Output

2.825 mW max

Operating Frequency

2,402 - 2,480 MHz

Operating Channel

40 channels, 0 - 39

Operating Mode

GFSK

Data Rate

500 kbs

Intended Use

To pair with consumers' smart phones to enable player tracking

Antenna Gain

-1.8 dBi

© 2019 Scientific Games Corp. and its Subsidiaries. All rights reserved. Unauthorized Distribution Prohibited. CONFIDENTIAL

Block Diagram

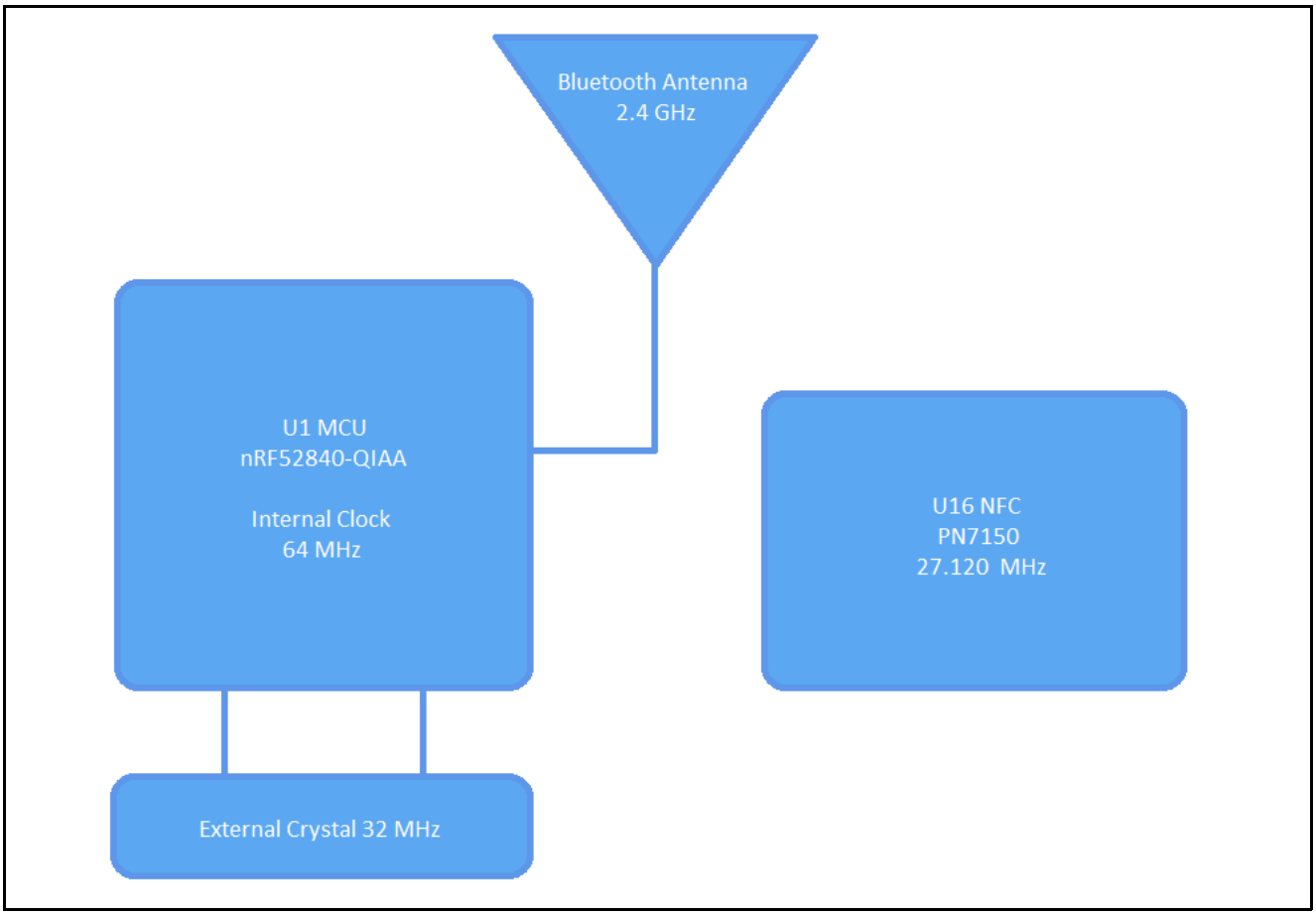

© 2019 Scientific Games Corp. and its Subsidiaries. All rights reserved. Unauthorized Distribution Prohibited.

Draft Copy
11 March 2019

RF Schematic

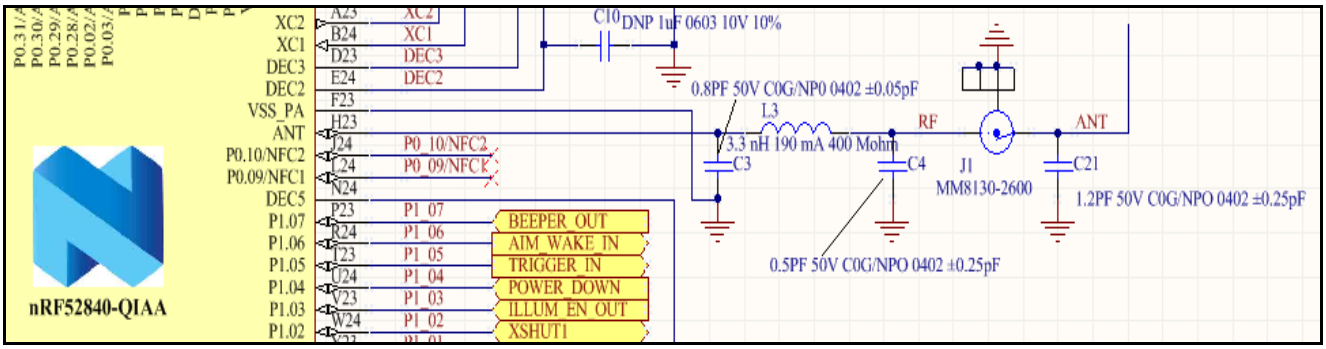

© 2019 Scientific Games Corp. and its Subsidiaries. All rights reserved. Unauthorized Distribution Prohibited. CONFIDENTIAL