# TEST REPORT

| | |
|---|---|
| Report No.: | BCTC2110429988E |
| Applicant: | Shenzhen Elenose Technology Co. LTD |
| Product Name: | Bone conduction wireless headphones |
| Model/Type Ref.: | BH328 |
| Tested Date: | 2021-10-14 to 2021-10-28 |
| Issued Date: | 2021-10-28 |

**Shenzhen BCTC Testing Co., Ltd.**

# FCC ID:2AQ9R-BH328

| | |
|---|---|
| Product Name: | Bone conduction wireless headphones |
| Trademark: | N/A |
| Model/Type Ref.: | BH328 |
| Prepared For: | Shenzhen Elenose Technology Co. LTD |
| Address: | Room 423, Building 8, Zijing No.1, Huahui Road, Tongsheng Community, Dalang Street, Longhua District, Shenzhen, Guangdong, China |
| Manufacturer: | Shenzhen Elenose Technology Co. LTD |
| Address: | Room 423, Building 8, Zijing No.1, Huahui Road, Tongsheng Community, Dalang Street, Longhua District, Shenzhen, Guangdong, China |
| Prepared By: | Shenzhen BCTC Testing Co., Ltd. |
| Address: | 1-2/F., Building B, Pengzhou Industrial Park, No.158, Fuyuan 1st Road, Tangwei, Fuhai Subdistrict, Bao'an District, Shenzhen, Guangdong, China |
| Sample Received Date: | 2021-10-14 |
| Sample tested Date: | 2021-10-14 to 2021-10-28 |
| Issue Date: | 2021-10-28 |
| Report No.: | BCTC2110429988E |
| Test Standards: | FCC Part15.247<br>ANSI C63.10-2013 |
| Test Results: | PASS |
| Remark: | This is Bluetooth Classic radio test report. |

Tested by:

Willem Wang

Willem Wang/Project Handler

Approved by:

Zero Zhou/Reviewer

The test report is effective only with both signature and specialized stamp. This result(s) shown in this report refer only to the sample(s) tested. Without written approval of Shenzhen BCTC Testing Co., Ltd, this report can't be reproduced except in full. The tested sample(s) and the sample information are provided by the client.

Table Of Content

Test Report Declaration Page
1. Version . . . . . 5
2. Test Summary . . . . . 6
3. Measurement Uncertainty . . . . . 7
4. Product Information And Test Setup . . . . . 8
4.1 Product Information . . . . . 8
4.2 Test Setup Configuration . . . . . 8
4.3 Support Equipment . . . . . 9
4.4 Channel List . . . . . 9
4.5 Test Mode . . . . . 10
4.6 Table Of Parameters Of Text Software Setting . . . . . 10
5. Test Facility And Test Instrument Used . . . . . 11
5.1 Test Facility . . . . . 11
5.2 Test Instrument Used . . . . . 11
6. Conducted Emissions . . . . . 13
6.1 Block Diagram Of Test Setup . . . . . 13
6.2 Limit . . . . . 13
6.3 Test Procedure . . . . . 13
6.4 EUT Operating Conditions . . . . . 14
6.5 Test Result . . . . . 15
7. Radiated Emissions . . . . . 17
7.1 Block Diagram Of Test Setup . . . . . 17
7.2 Limit . . . . . 18
7.3 Test Procedure . . . . . 19
7.4 EUT Operating Conditions . . . . . 20
7.5 Test Result . . . . . 21
8. Radiated Band Emission Measurement And Restricted Bands Of Operation . . . 25
8.1 Block Diagram Of Test Setup . . . . . 25
8.2 Limit . . . . . 25
8.3 Test Procedure . . . . . 26
8.4 EUT Operating Conditions . . . . . 26
8.5 Test Result . . . . . 27
9. Conducted Emission . . . . . 28
9.1 Block Diagram Of Test Setup . . . . . 28
9.2 Limit . . . . . 28
9.3 Test Procedure . . . . . 28
9.4 Test Result . . . . . 29
10. 20 dB Bandwidth . . . . . 35

10.1 Block Diagram Of Test Setup . . . . . 35
10.2 Limit . . . . . 35
10.3 Test Procedure . . . . . 35
10.4 Test Result . . . . . 36
11. Maximum Peak Output Power . . . . . 40
11.1 Block Diagram Of Test Setup . . . . . 40
11.2 Limit . . . . . 40
11.3 Test Procedure . . . . . 40
11.4 Test Result . . . . . 41
12. Hopping Channel Separation . . . . . 45
12.1 Block Diagram Of Test Setup . . . . . 45
12.2 Limit . . . . . 45
12.3 Test Procedure . . . . . 45
12.4 Test Result . . . . . 46
13. Number Of Hopping Frequency . . . . . 50
13.1 Block Diagram Of Test Setup . . . . . 50
13.2 Limit . . . . . 50
13.3 Test Procedure . . . . . 50
13.4 Test Result . . . . . 51
14. Dwell Time . . . . . 52
14.1 Block Diagram Of Test Setup . . . . . 52
14.2 Limit . . . . . 52
14.3 Test Procedure . . . . . 52
14.4 Test Result . . . . . 53
15. Antenna Requirement . . . . . 57
15.1 Limit . . . . . 57
15.2 Test Result . . . . . 57
16. EUT Photographs . . . . . 58
17. EUT Test Setup Photographs . . . . . 59

(Note: N/A Means Not Applicable)

## 1. Version

| Report No. | Issue Date | Description | Approved |
|---|---|---|---|
| BCTC2110429988E | 2021-10-28 | Original | Valid |
| | | | |

## 2. Test Summary

The Product has been tested according to the following specifications:

| No. | Test Parameter | Clause No | Results |
|---|---|---|---|
| 1 | Conducted emission AC power port | §15.207 | PASS |
| 2 | Conducted peak output power for FHSS | §15.247(b)(1) | PASS |
| 3 | 20dB Occupied bandwidth | §15.247(a)(1) | PASS |
| 4 | Number of hopping frequencies | §15.247(a)(1)(iii) | PASS |
| 5 | Dwell Time | §15.247(a)(1)(iii) | PASS |
| 6 | Spurious RF conducted emissions | §15.247(d) | PASS |
| 7 | Band edge | §15.247(d) | PASS |
| 8 | Spurious radiated emissions for transmitter | §15.247(d) & §15.209 & §15.205 | PASS |
| 9 | Antenna Requirement | 15.203 | PASS |

## 3. Measurement Uncertainty

Where relevant, the following measurement uncertainty levels have been estimated for tests performed on the Product as specified in CISPR 16-4-2. This uncertainty represents an expanded uncertainty expressed at approximately the 95% confidence level using a coverage factor of k=2.

| No. | Item | Uncertainty |
|---|---|---|
| 1 | 3m chamber Radiated spurious emission(9kHz-30MHz) | U=3.7dB |
| 2 | 3m chamber Radiated spurious emission(30MHz-1GHz) | U=4.3dB |
| 3 | 3m chamber Radiated spurious emission(1GHz-18GHz) | U=4.5dB |
| 4 | 3m chamber Radiated spurious emission(18GHz-40GHz) | U=3.34dB |
| 5 | Conducted Emission(150kHz-30MHz) | U=3.20dB |
| 6 | Conducted Adjacent channel power | U=1.38dB |
| 7 | Conducted output power uncertainty Above 1G | U=1.576dB |
| 8 | Conducted output power uncertainty below 1G | U=1.28dB |
| 9 | humidity uncertainty | U=5.3% |
| 10 | Temperature uncertainty | U=0.59℃ |

# 4. Product Information And Test Setup

## 4.1 Product Information

| | |
|---|---|
| Model/Type Ref.: | BH328 |
| Model differences: | N/A |
| Operation Frequency: | Bluetooth: 2402-2480MHz |
| Type of Modulation: | Bluetooth: GFSK, π/4DQPSK |
| Number Of Channel | 79CH |
| Antenna installation: | Bluetooth: Internal antenna |
| Antenna Gain: | Bluetooth:2.5dBi |
| Ratings: | DC 5V from adapter<br>DC 3.7V from battery |

## 4.2 Test Setup Configuration

See test photographs attached in *EUT TEST SETUP PHOTOGRAPHS* for the actual connections between Product and support equipment.
Conducted Emission:

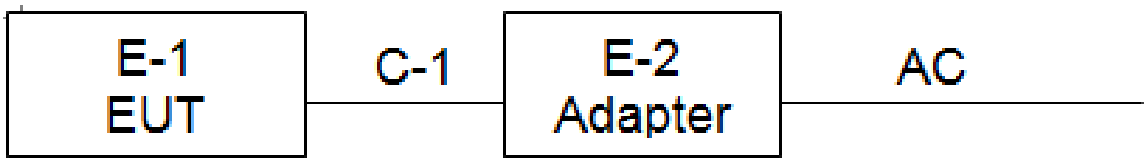


Radiated Spurious Emission:

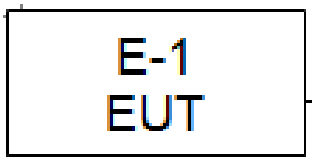

## 4.3 Support Equipment

| No. | Device Type | Brand | Model | Series No. | Note |
|---|---|---|---|---|---|
| E-1 | Bone conduction wireless earphone | N/A | BH328 | N/A | EUT |
| E-2 | Adapter | N/A | BCTC001 | N/A | EUT |

| Item | Shielded Type | Ferrite Core | Length | Note |
|---|---|---|---|---|
| C-1 | NO | NO | 0.3M | DC cable unshielded |

***Notes:***
1. All the equipment/cables were placed in the worst-case configuration to maximize the emission during the test.
2. Grounding was established in accordance with the manufacturer's requirements and conditions for the intended use.

## 4.4 Channel List

| CH | Frequency (MHz) | CH | Frequency (MHz) | CH | Frequency (MHz) | CH | Frequency (MHz) |
|---|---|---|---|---|---|---|---|
| 0 | 2402 | 1 | 2403 | 2 | 2404 | 3 | 2405 |
| 4 | 2406 | 5 | 2407 | 6 | 2408 | 7 | 2409 |
| 8 | 2410 | 9 | 2411 | 10 | 2412 | 11 | 2413 |
| 12 | 2414 | 13 | 2415 | 14 | 2416 | 15 | 2417 |
| 16 | 2418 | 17 | 2419 | 18 | 2420 | 19 | 2421 |
| 20 | 2422 | 21 | 2423 | 22 | 2424 | 23 | 2425 |
| 24 | 2426 | 25 | 2427 | 26 | 2428 | 27 | 2429 |
| 28 | 2430 | 29 | 2431 | 30 | 2432 | 31 | 2433 |
| 32 | 2434 | 33 | 2435 | 34 | 2436 | 35 | 2437 |
| 36 | 2438 | 37 | 2439 | 38 | 2440 | 39 | 2441 |
| 40 | 2442 | 41 | 2443 | 42 | 2444 | 43 | 2445 |
| 44 | 2446 | 45 | 2447 | 46 | 2448 | 47 | 2449 |
| 48 | 2450 | 49 | 2451 | 50 | 2452 | 51 | 2453 |
| 52 | 2454 | 53 | 2455 | 54 | 2456 | 55 | 2457 |
| 56 | 2458 | 57 | 2459 | 58 | 2460 | 59 | 2461 |
| 60 | 2462 | 61 | 2463 | 62 | 2464 | 63 | 2465 |
| 64 | 2466 | 65 | 2467 | 66 | 2468 | 67 | 2469 |
| 68 | 2470 | 69 | 2471 | 70 | 2472 | 71 | 2473 |
| 72 | 2474 | 73 | 2475 | 74 | 2476 | 75 | 2477 |
| 76 | 2478 | 77 | 2479 | 78 | 2480 | 79 | / |

## 4.5 Test Mode

To investigate the maximum EMI emission characteristics generates from EUT, the test system was pre-scanning tested base on the consideration of following EUT operation mode or test configuration mode which possible have effect on EMI emission level. Each of these EUT operation mode(s) or test configuration mode(s) mentioned above was evaluated respectively.

| Test Mode | Test mode | Low channel | Middle channel | High channel |
|---|---|---|---|---|
| 1 | Transmitting(GFSK) | 2402MHz | 2441MHz | 2480MHz |
| 2 | Transmitting(π/4DQPSK) | 2402MHz | 2441MHz | 2480MHz |
| 3 | Charging(Conducted emission) | | | |
| 4 | Transmitting (Radiated emission) | | | |

Note:

(1) The measurements are performed at the highest, middle, lowest available channels.

(2) Fully-charged battery is used during the test

## 4.6 Table Of Parameters Of Text Software Setting

During testing channel & power controlling software provided by the customer was used to control the operating channel as well as the output power level. The RF output power selection is for the setting of RF output power expected by the customer and is going to be fixed on the firmware of the final end product power parameters

| Test software Version | FCC_assist 1.0.2.2 | | |
|---|---|---|---|
| Frequency | 2402 MHz | 2441 MHz | 2480 MHz |
| Parameters | DEF | DEF | DEF |

# 5. Test Facility And Test Instrument Used

## 5.1 Test Facility

All measurement facilities used to collect the measurement data are located at Shenzhen BCTC Testing Co., Ltd. Address: 1-2/F., Building B, Pengzhou Industrial Park, No.158, Fuyuan 1st Road, Tangwei, Fuhai Subdistrict, Bao'an District, Shenzhen, Guangdong, China. The site and apparatus are constructed in conformance with the requirements of ANSI C63.4 and CISPR 16-1-1 other equivalent standards.

FCC Test Firm Registration Number: 712850

IC Registered No.: 23583

## 5.2 Test Instrument Used

| Conducted emissions Test | | | | | |
|---|---|---|---|---|---|
| **Equipment** | **Manufacturer** | **Model#** | **Serial#** | **Last Cal.** | **Next Cal.** |
| Receiver | R&S | ESR3 | 102075 | May 28, 2021 | May 27, 2022 |
| LISN | R&S | ENV216 | 101375 | May 28, 2021 | May 27, 2022 |
| ISN | HPX | ISN T800 | S1509001 | May 28, 2021 | May 27, 2022 |
| Software | Frad | EZ-EMC | EMC-CON 3A1 | \ | \ |

| RF conducted test | | | | | |
|---|---|---|---|---|---|
| **Equipment** | **Manufacturer** | **Model#** | **Serial#** | **Last Cal.** | **Next Cal.** |
| Power Metter | Keysight | E4419B | \ | May 28, 2021 | May 27, 2022 |
| Power Sensor (AV) | Keysight | E9 300A | \ | May 28, 2021 | May 27, 2022 |
| Signal Analyzer 20kHz-26.5GHz | KEYSIGHT | N9020A | MY49100060 | May 28, 2021 | May 27, 2022 |
| Spectrum Analyzer 9kHz-40GHz | Agilent | FSP40 | 100363 | May 28, 2021 | May 27, 2022 |

| Radiated emissions Test (966 chamber) | | | | | |
|---|---|---|---|---|---|
| **Equipment** | **Manufacturer** | **Model#** | **Serial#** | **Last Cal.** | **Next Cal.** |
| 966 chamber | ChengYu | 966 Room | 966 | Jun. 06. 2020 | Jun. 05, 2023 |
| Receiver | R&S | ESR3 | 102075 | May 28, 2021 | May 27, 2022 |
| Receiver | R&S | ESRP | 101154 | May 28, 2021 | May 27, 2022 |
| Amplifier | SKET | LAPA_01G18G-45dB | \ | May 28, 2021 | May 27, 2022 |
| Amplifier | Schwarzbeck | BBV9744 | 9744-0037 | May 28, 2021 | May 27, 2022 |
| TRILOG Broadband Antenna | schwarzbeck | VULB 9163 | VULB9163-942 | Jun. 01, 2021 | May 31, 2022 |
| Horn Antenna | SCHWARZBECK | BBHA9120D | 1541 | Jun. 02, 2021 | Jun. 01, 2022 |
| Horn Antenna (18GHz-40GHz) | SCHWARZBECK | BBHA9170 | 822 | Jun. 15, 2021 | Jun. 14, 2022 |
| Amplifier (18GHz-40GHz) | MITEQ | TTA1840-35-HG | 2034381 | May 28, 2021 | May 27, 2022 |
| Loop Antenna (9KHz-30MHz) | SCHWARZBECK | FMZB1519B | 014 | Jun. 02, 2021 | Jun. 01, 2022 |
| RF cables1 (9kHz-30MHz) | Huber+Suhnar | 9kHz-30MHz | B1702988-0008 | May 28, 2021 | May 27, 2022 |
| RF cables2 (30MHz-1GHz) | Huber+Suhnar | 30MHz-1GHz | 1486150 | May 28, 2021 | May 27, 2022 |
| RF cables3 (1GHz-40GHz) | Huber+Suhnar | 1GHz-40GHz | 1607106 | May 28, 2021 | May 27, 2022 |
| Power Metter | Keysight | E4419B | \ | May 28, 2021 | May 27, 2022 |
| Power Sensor (AV) | Keysight | E9 300A | \ | May 28, 2021 | May 27, 2022 |
| Signal Analyzer 20kHz-26.5GHz | KEYSIGHT | N9020A | MY49100060 | May 28, 2021 | May 27, 2022 |
| Spectrum Analyzer 9kHz-40GHz | R&S | FSP40 | 100363 | May 28, 2021 | May 27, 2022 |
| Software | Frad | EZ-EMC | FA-03A2 RE | \ | \ |

# 6. Conducted Emissions

## 6.1 Block Diagram Of Test Setup

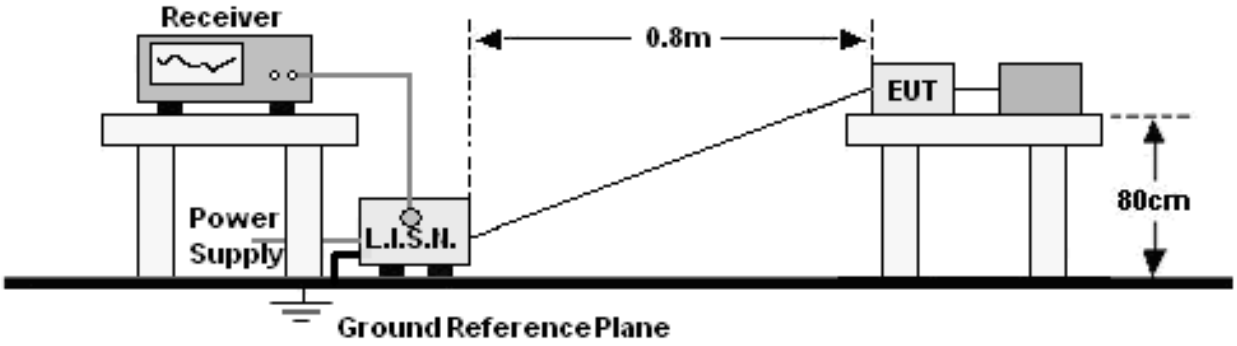


## 6.2 Limit

| FREQUENCY (MHz) | Limit (dBuV) | |
|---|---|---|
| | Quas-peak | Average |
| 0.15 -0.5 | 66 - 56 * | 56 - 46 * |
| 0.50 -5.0 | 56.00 | 46.00 |
| 5.0 -30.0 | 60.00 | 50.00 |
| Notes:<br>1. *Decreasing linearly with logarithm of frequency.<br>2. The lower limit shall apply at the transition frequencies. | | |

## 6.3 Test Procedure

| Receiver Parameters | Setting |
|---|---|
| Attenuation | 10 dB |
| Start Frequency | 0.15 MHz |
| Stop Frequency | 30 MHz |
| IF Bandwidth | 9 kHz |

a. The Product was placed on a nonconductive table 0.8 m above the horizontal ground reference plane, and 0.4 m from the vertical ground reference plane, and connected to the main through Line Impedance Stability Network (L.I.S.N).

b. The RBW of the receiver was set at 9 kHz in 150 kHz ~ 30MHz with Peak and AVG detector in Max Hold mode. Run the receiver's pre-scan to record the maximum disturbance generated from Product in all power lines in the full band.

c. For each frequency whose maximum record was higher or close to limit, measure its QP and AVG values and record.

## 6.4 EUT Operating Conditions

The EUT was configured for testing in a typical fashion (as a customer would normally use it). The EUT has been programmed to continuously transmit during test. This operating condition was tested and used to collect the included data.

## 6.5 Test Result

| | | | |
|---|---|---|---|
| Temperature: | 26 ℃ | Relative Humidity: | 54% |
| Pressure: | 101kPa | Phase : | Line |
| Test Voltage : | AC120V/60Hz | Test Mode: | Mode 3 |

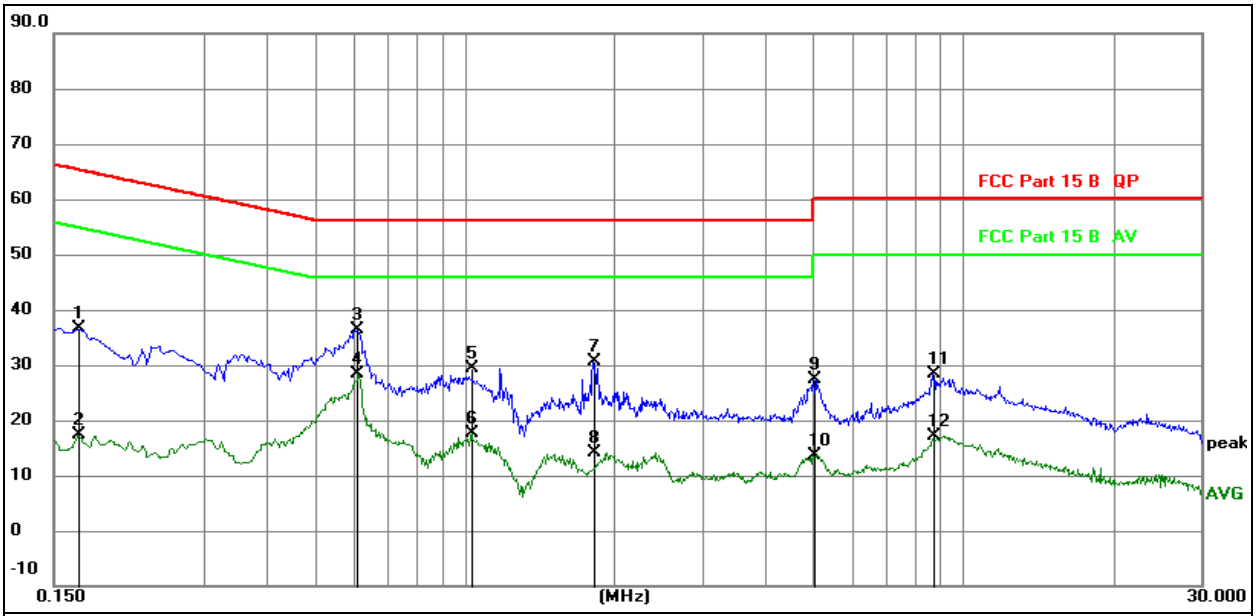


Remark:

1. All readings are Quasi-Peak and Average values.

2. Factor = Insertion Loss + Cable Loss.

| No. | Mk. | Freq. | Reading Level | Correct Factor | Measure-ment | Limit | Over | |
|---|---|---|---|---|---|---|---|---|
| | | MHz | | dB | dBuV | dBuV | dB | Detector |
| 1 | | 0.1680 | 26.90 | 9.61 | 36.51 | 65.06 | -28.55 | QP |
| 2 | | 0.1680 | 7.76 | 9.61 | 17.37 | 55.06 | -37.69 | AVG |
| 3 | | 0.6090 | 26.86 | 9.62 | 36.48 | 56.00 | -19.52 | QP |
| 4 | * | 0.6090 | 18.73 | 9.62 | 28.35 | 46.00 | -17.65 | AVG |
| 5 | | 1.0320 | 19.66 | 9.63 | 29.29 | 56.00 | -26.71 | QP |
| 6 | | 1.0320 | 7.99 | 9.63 | 17.62 | 46.00 | -28.38 | AVG |
| 7 | | 1.8105 | 21.02 | 9.63 | 30.65 | 56.00 | -25.35 | QP |
| 8 | | 1.8105 | 4.46 | 9.63 | 14.09 | 46.00 | -31.91 | AVG |
| 9 | | 5.0235 | 17.78 | 9.71 | 27.49 | 60.00 | -32.51 | QP |
| 10 | | 5.0235 | 3.93 | 9.71 | 13.64 | 50.00 | -36.36 | AVG |
| 11 | | 8.7090 | 18.71 | 9.77 | 28.48 | 60.00 | -31.52 | QP |
| 12 | | 8.7090 | 7.46 | 9.77 | 17.23 | 50.00 | -32.77 | AVG |

| | | | |
|---|---|---|---|
| Temperature: | 26 ℃ | Relative Humidity: | 54% |
| Pressure: | 101kPa | Phase : | Neutral |
| Test Voltage : | AC120V/60Hz | Test Mode: | Mode 3 |

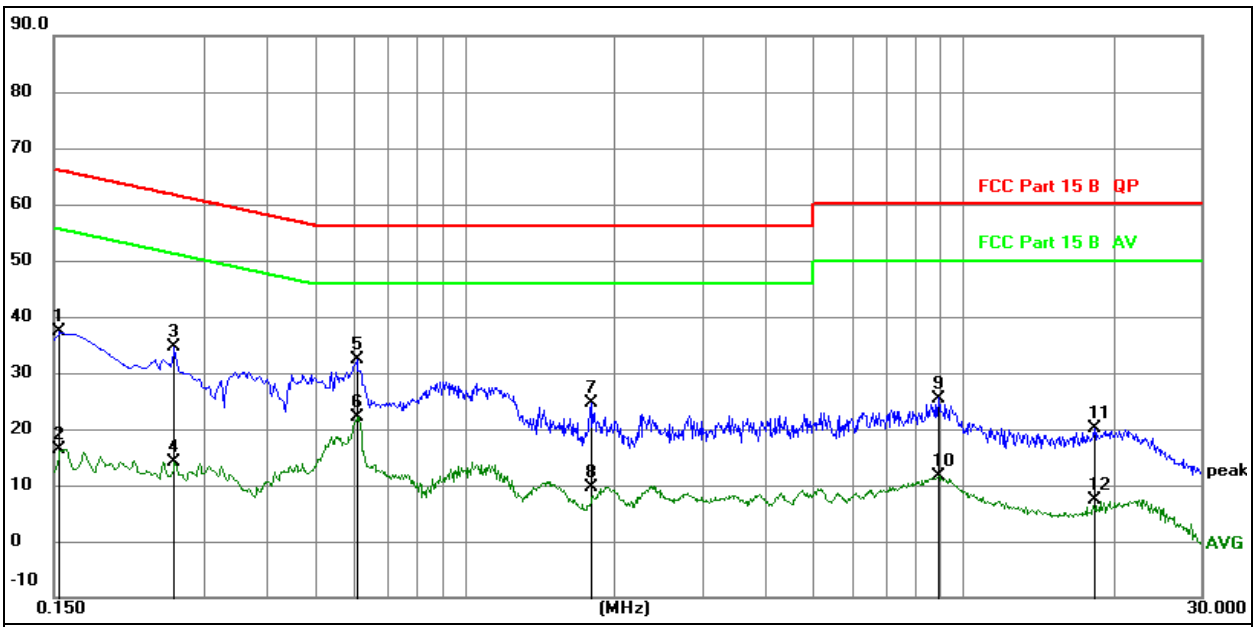


Remark:

1. All readings are Quasi-Peak and Average values.

2. Factor = Insertion Loss + Cable Loss.

| No. | Mk. | Freq. | Reading Level | Correct Factor | Measure-ment | Limit | Over | |
|---|---|---|---|---|---|---|---|---|
| | | MHz | | dB | dBuV | dBuV | dB | Detector |
| 1 | | 0.1539 | 27.69 | 9.61 | 37.30 | 65.79 | -28.49 | QP |
| 2 | | 0.1539 | 6.86 | 9.61 | 16.47 | 55.79 | -39.32 | AVG |
| 3 | | 0.2615 | 24.90 | 9.61 | 34.51 | 61.38 | -26.87 | QP |
| 4 | | 0.2615 | 4.61 | 9.61 | 14.22 | 51.38 | -37.16 | AVG |
| 5 | * | 0.6075 | 22.87 | 9.62 | 32.49 | 56.00 | -23.51 | QP |
| 6 | | 0.6075 | 12.54 | 9.62 | 22.16 | 46.00 | -23.84 | AVG |
| 7 | | 1.8000 | 15.04 | 9.63 | 24.67 | 56.00 | -31.33 | QP |
| 8 | | 1.8000 | 0.05 | 9.63 | 9.68 | 46.00 | -36.32 | AVG |
| 9 | | 8.9163 | 15.72 | 9.78 | 25.50 | 60.00 | -34.50 | QP |
| 10 | | 8.9163 | 1.97 | 9.78 | 11.75 | 50.00 | -38.25 | AVG |
| 11 | | 18.3283 | 10.38 | 9.76 | 20.14 | 60.00 | -39.86 | QP |
| 12 | | 18.3283 | -2.37 | 9.76 | 7.39 | 50.00 | -42.61 | AVG |

# 7. Radiated Emissions

## 7.1 Block Diagram Of Test Setup

（A）Radiated Emission Test-Up Frequency Below 30MHz

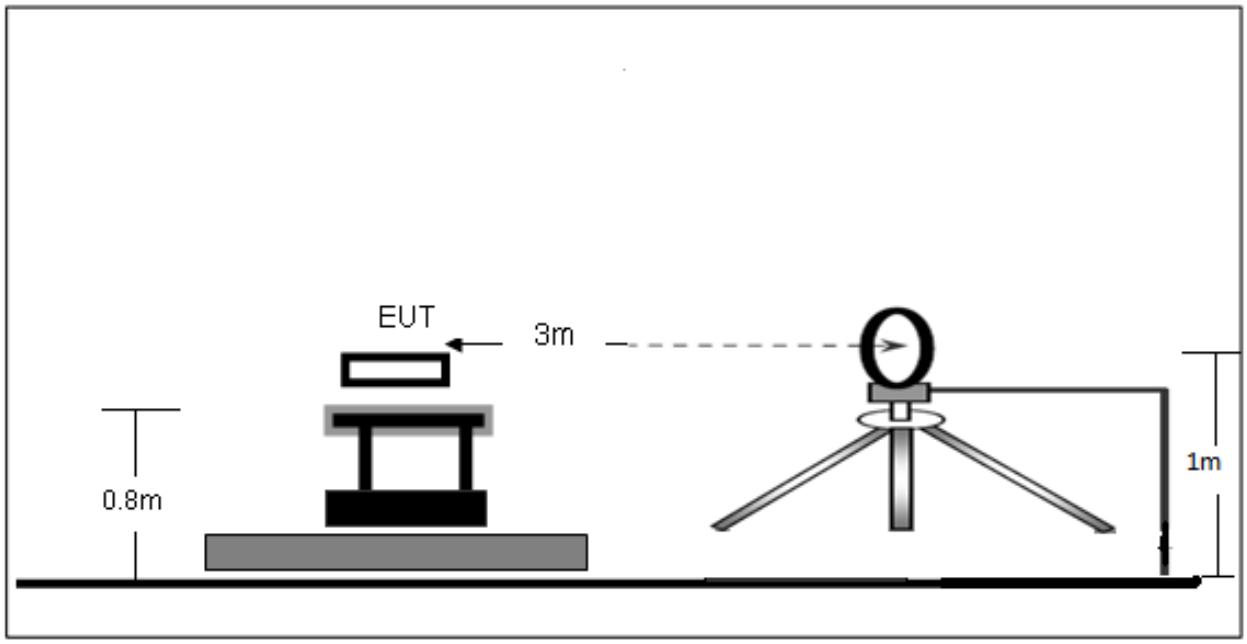


（B）Radiated Emission Test-Up Frequency 30MHz~1GHz

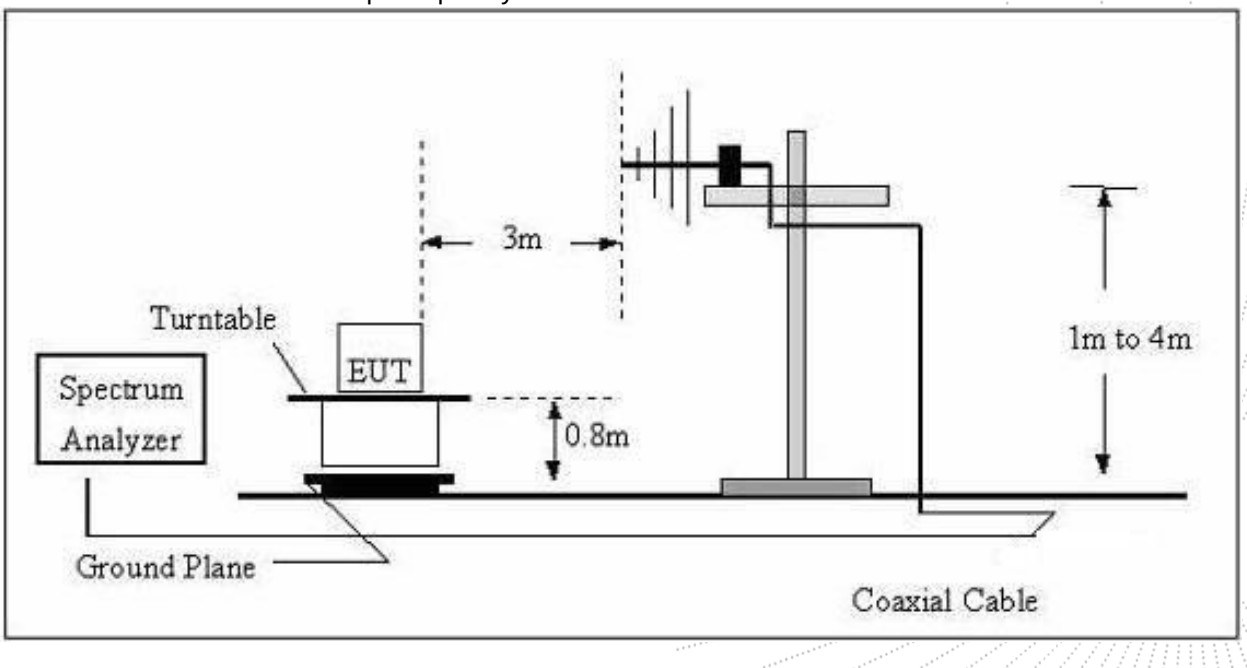

（C）Radiated Emission Test-Up Frequency Above 1GHz

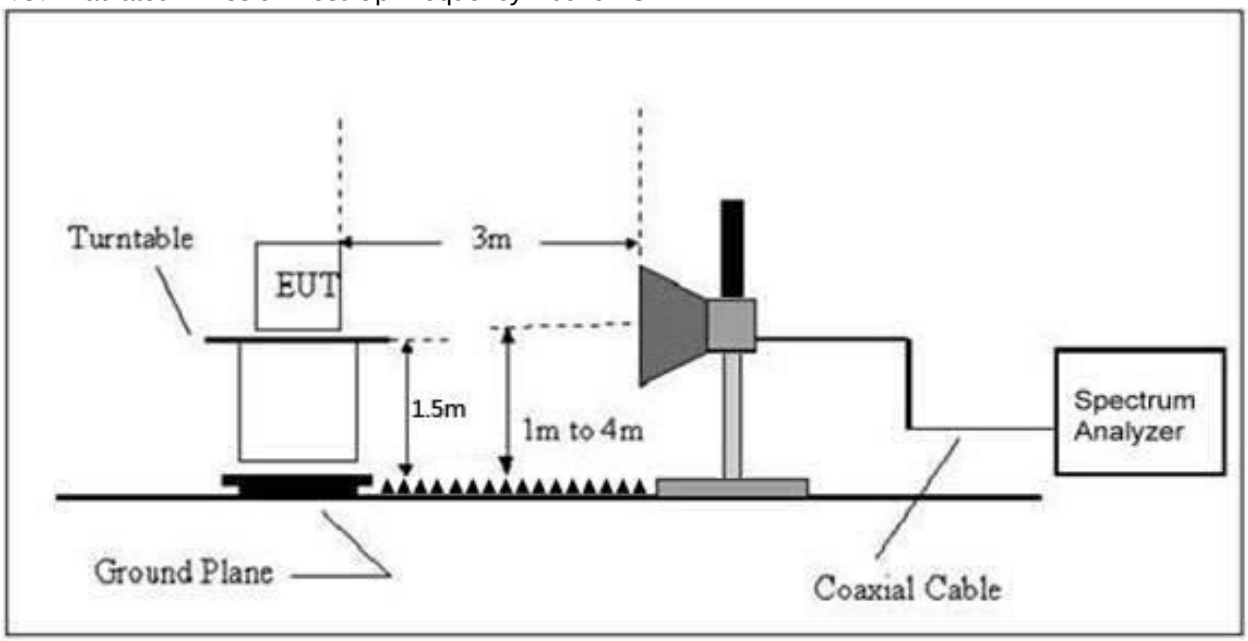


## 7.2 Limit

20dBc in any 100 kHz bandwidth outside the operating frequency band. In case the emission fall within the restricted band specified on 15.205(a), then the 15.209(a) limit in the table below has to be followed.

| Frequency | Field Strength | Distance | Field Strength Limit at 3m Distance | |
|---|---|---|---|---|
| (MHz) | uV/m | (m) | uV/m | dBuV/m |
| 0.009 ~ 0.490 | 2400/F(kHz) | 300 | 10000 * 2400/F(kHz) | $20\log^{(2400/F(kHz))} + 80$ |
| 0.490 ~ 1.705 | 24000/F(kHz) | 30 | 100 * 24000/F(kHz) | $20\log^{(24000/F(kHz))} + 40$ |
| 1.705 ~ 30 | 30 | 30 | 100 * 30 | $20\log^{(30)} + 40$ |
| 30 ~ 88 | 100 | 3 | 100 | $20\log^{(100)}$ |
| 88 ~ 216 | 150 | 3 | 150 | $20\log^{(150)}$ |
| 216 ~ 960 | 200 | 3 | 200 | $20\log^{(200)}$ |
| Above 960 | 500 | 3 | 500 | $20\log^{(500)}$ |

LIMITS OF RADIATED EMISSION MEASUREMENT (Above 1000MHz)

| FREQUENCY (MHz) | Limit (dBuV/m) (at 3M) | |
|---|---|---|
| | PEAK | AVERAGE |
| Above 1000 | 74 | 54 |

Notes:
(1)The limit for radiated test was performed according to FCC PART 15C.
(2)The tighter limit applies at the band edges.
(3) Emission level (dBuV/m)=20log Emission level (uV/m).

FREQUENCY RANGE OF RADIATED MEASUREMENT
(a) For an intentional radiator
the spectrum shall be investigated from the lowest radio frequency signal generated in the device, without going below 9 kHz, up to at least the frequency shown in this paragraph:
(1) If the intentional radiator operates below 10 GHz: to the tenth harmonic of the highest fundamental frequency or to 40 GHz, whichever is lower.
(2) If the intentional radiator operates at or above 10 GHz and below 30 GHz: to the fifth harmonic of the highest fundamental frequency or to 100 GHz, whichever is lower.
(3) If the intentional radiator operates at or above 30 GHz: to the fifth harmonic of the highest fundamental frequency or to 200 GHz, whichever is lower, unless specified otherwise elsewhere in the rules.
(4) If the intentional radiator operates at or above 95 GHz: To the third harmonic of the highest fundamental frequency or to 750 GHz, whichever is lower, unless specified otherwise elsewhere in the rules.
(5) If the intentional radiator contains a digital device, regardless of whether this digital
device controls the functions of the intentional radiator or the digital device is used for additional control or function purposes other than to enable the operation of the intentional radiator, the frequency range shall be investigated up to the range specified in paragraphs (a) (1)through (4) of this section or the range applicable to the digital device, as shown in paragraph (b)(1) of this section, whichever is the higher frequency range of investigation.

## 7.3 Test Procedure

| Receiver Parameter | Setting |
|---|---|
| Attenuation | Auto |
| 9kHz~150kHz | RBW 200Hz for QP |
| 150kHz~30MHz | RBW 9kHz for QP |
| 30MHz~1000MHz | RBW 120kHz for QP |

| Spectrum Parameter | Setting |
|---|---|
| 1-25GHz | RBW 1 MHz /VBW 1 MHz for Peak,<br>RBW 1 MHz / VBW 10Hz for Average |

Below 1GHz test procedure as below:

a. The EUT was placed on the top of a rotating table 0.8 meters above the ground at a 3 meter semi-anechoic chamber. The table was rotated 360 degrees to determine the position of the highest radiation.

b. The EUT was set 3 meters away from the interference-receiving antenna, which was mounted on the top of a variable-height antenna tower.

c. The antenna height is varied from one meter to four meters above the ground to determine the maximum value of the field strength. Both horizontal and vertical polarizations of the antenna are set to make the measurement.

d. For each suspected emission, the EUT was arranged to its worst case and then the antenna was tuned to heights from 1 meter to 4 meters (for the test frequency of below 30MHz, the antenna was tuned to heights 1 meter) and the rotatable table was turned from 0 degrees to 360 degrees to find the maximum reading.

e. The test-receiver system was set to Peak Detect Function and Specified Bandwidth with Maximum Hold Mode.

f. If the emission level of the EUT in peak mode was 10dB lower than the limit specified, then testing could be stopped and the peak values of the EUT would be reported. Otherwise the emissions that did not have 10dB margin would be re-tested one by one using peak, quasi-peak or average method as specified and then reported in a data sheet.

Above 1GHz test procedure as below:

a. The EUT was placed on the top of a rotating table 1.5 meters above the ground at a 3 meter chamber. The table was rotated 360 degrees to determine the position of the highest radiation.

b. The EUT was set 3 meters away from the interference-receiving antenna, which was mounted on the top of a variable-height antenna tower.

c. The antenna height is varied from one meter to four meters above the ground to determine the maximum value of the field strength. Both horizontal and vertical polarizations of the antenna are set to make the measurement.

d. For each suspected emission, the EUT was arranged to its worst case and then the antenna was tuned to heights from 1 meter to 4 meters and the rota table was turned from 0 degrees to 360 degrees to find the maximum reading.

e. The test-receiver system was set to Peak Detect Function and Specified Bandwidth with Maximum Hold Mode.

f. If the emission level of the EUT in peak mode was 10dB lower than the limit specified, then testing could be stopped and the peak values of the EUT would be reported. Otherwise the emissions that did not have 10dB margin would be re-tested one by one using peak, quasi-peak or average method as specified and then reported in a data sheet.

g. Test the EUT in the lowest channel, the middlest channel, the Highest channel.

Note:

Both horizontal and vertical antenna polarities were tested and performed pretest to three orthogonal axis. The worst case emissions were reported.

## 7.4 EUT Operating Conditions

The EUT was configured for testing in a typical fashion (as a customer would normally use it). The EUT has been programmed to continuously transmit during test. This operating condition was tested and used to collect the included data.

## 7.5 Test Result

Below 30MHz

| | | | |
|---|---|---|---|
| Temperature: | 26℃ | Relative Humidtity: | 24% |
| Pressure: | 101 kPa | Test Voltage : | DC 3.7V |
| Test Mode : | Mode 4 | Polarization : | -- |

| Freq. | Reading | Limit | Margin | State |
|---|---|---|---|---|
| (MHz) | (dBuV/m) | (dBuV/m) | (dB) | P/F |
| -- | -- | -- | -- | PASS |
| -- | -- | -- | -- | PASS |

Note:
The amplitude of spurious emissions which are attenuated by more than 20dB below the permissible value has no need to be reported.
Distance extrapolation factor =40 log (specific distance/test distance)(dB);
Limit line = specific limits(dBuv) + distance extrapolation factor.

Between 30MHz – 1GHz

| | | | |
|---|---|---|---|
| Temperature: | 26 ℃ | Relative Humidity: | 54% |
| Pressure: | 101KPa | Phase : | Horizontal |
| Test Mode: | Mode 4 | Remark: | N/A |

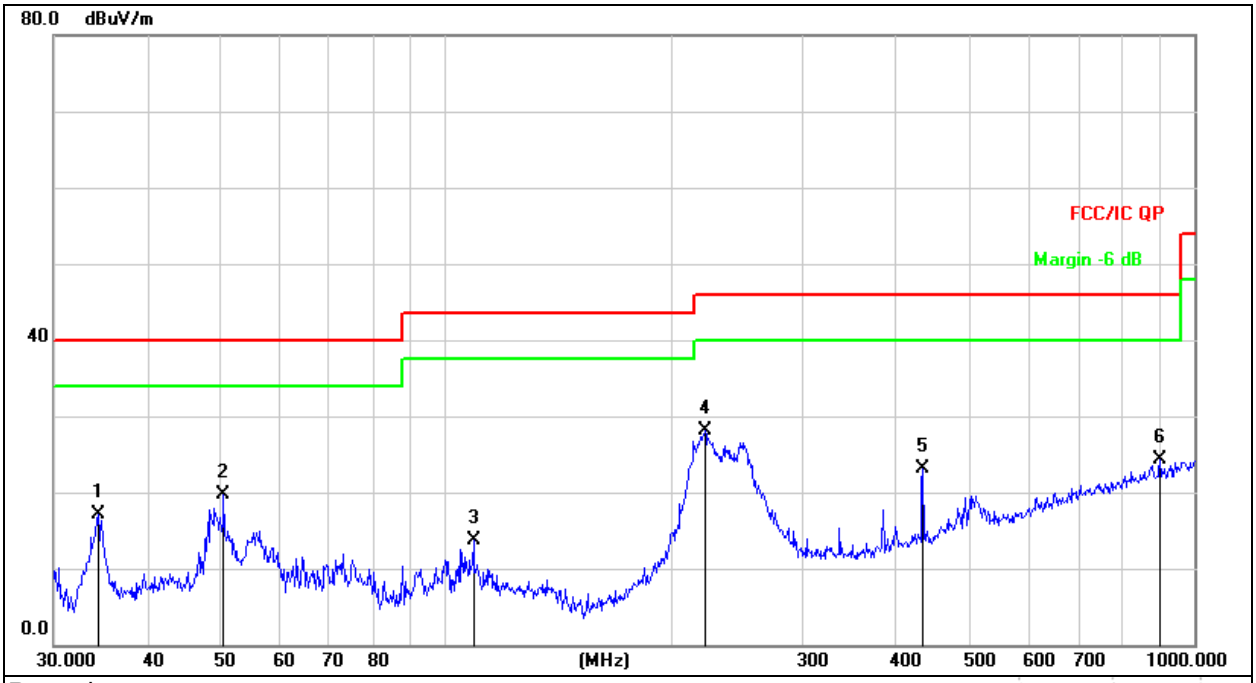


Remark:

Factor = Antenna Factor + Cable Loss – Pre-amplifier.

| No. | Mk. | Freq. | Reading Level | Correct Factor | Measure-ment | Limit | Over | |
|---|---|---|---|---|---|---|---|---|
| | | MHz | dBuV | dB | dBuV/m | dB/m | dB | Detector |
| 1 | | 34.3964 | 34.83 | -17.76 | 17.07 | 40.00 | -22.93 | QP |
| 2 | | 50.5860 | 35.07 | -15.46 | 19.61 | 40.00 | -20.39 | QP |
| 3 | | 109.0286 | 30.45 | -16.74 | 13.71 | 43.50 | -29.79 | QP |
| 4 | * | 222.1698 | 43.25 | -15.10 | 28.15 | 46.00 | -17.85 | QP |
| 5 | | 434.0651 | 33.00 | -9.98 | 23.02 | 46.00 | -22.98 | QP |
| 6 | | 900.1474 | 23.85 | 0.46 | 24.31 | 46.00 | -21.69 | QP |

| | | | |
|---|---|---|---|
| Temperature: | 26 ℃ | Relative Humidity: | 54% |
| Pressure: | 101KPa | Phase : | Vertical |
| Test Mode: | Mode 4 | Remark: | N/A |

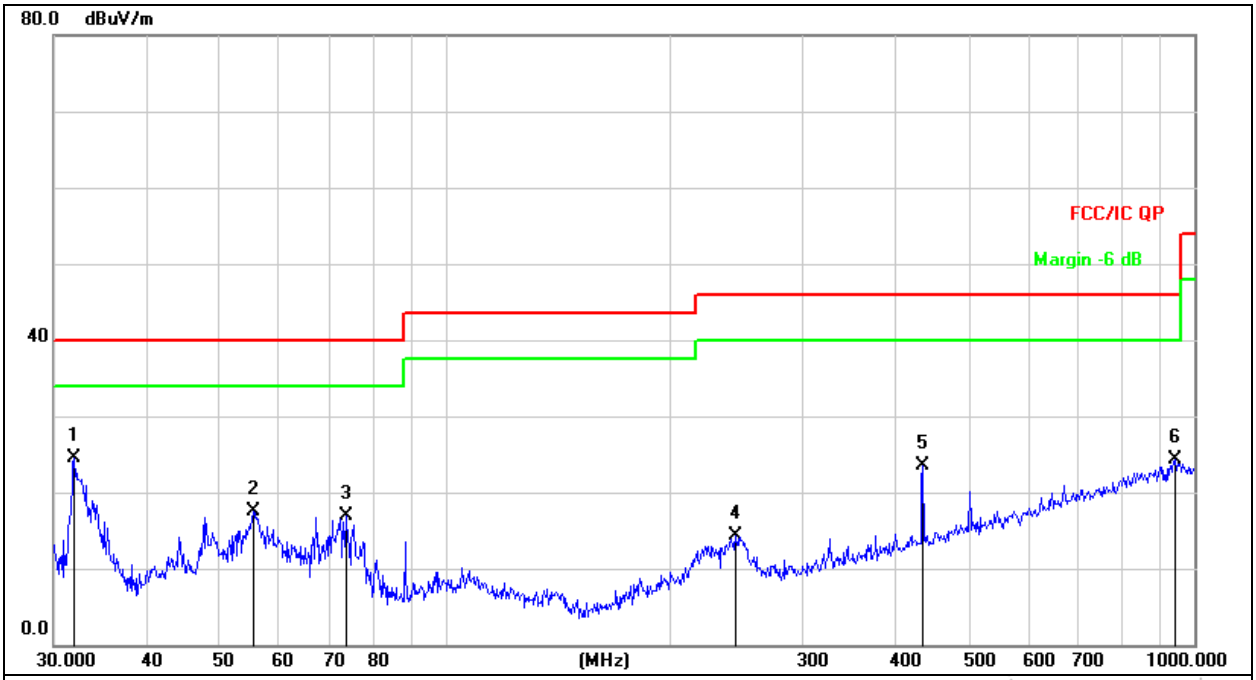


Remark:

Factor = Antenna Factor + Cable Loss – Pre-amplifier.

| No. | Mk. | Freq. | Reading Level | Correct Factor | Measure-ment | Limit | Over | |
|---|---|---|---|---|---|---|---|---|
| | | MHz | dBuV | dB | dBuV/m | dB/m | dB | Detector |
| 1 | * | 31.9546 | 42.55 | -18.14 | 24.41 | 40.00 | -15.59 | QP |
| 2 | | 55.4147 | 33.30 | -15.74 | 17.56 | 40.00 | -22.44 | QP |
| 3 | | 73.6170 | 36.27 | -19.33 | 16.94 | 40.00 | -23.06 | QP |
| 4 | | 244.2321 | 29.09 | -14.74 | 14.35 | 46.00 | -31.65 | QP |
| 5 | | 434.0651 | 33.46 | -9.98 | 23.48 | 46.00 | -22.52 | QP |
| 6 | | 942.1305 | 23.83 | 0.43 | 24.26 | 46.00 | -21.74 | QP |

Between 1GHz – 25GHz

| Polar (H/V) | Frequency (MHz) | Reading Level (dBuV/m) | Correct Factor (dB) | Measure-ment (dBuV/m) | Limits (dBuV/m) | Over (dB) | Detector Type |
|---|---|---|---|---|---|---|---|
| **GFSK Low channel** | | | | | | | |
| V | 4804.00 | 53.22 | -0.43 | 52.79 | 74.00 | -21.21 | PK |
| V | 4804.00 | 44.79 | -0.43 | 44.36 | 54.00 | -9.64 | AV |
| V | 7206.00 | 44.68 | 8.31 | 52.99 | 74.00 | -21.01 | PK |
| V | 7206.00 | 35.15 | 8.31 | 43.46 | 54.00 | -10.54 | AV |
| H | 4804.00 | 49.95 | -0.43 | 49.52 | 74.00 | -24.48 | PK |
| H | 4804.00 | 39.73 | -0.43 | 39.30 | 54.00 | -14.70 | AV |
| H | 7206.00 | 43.18 | 8.31 | 51.49 | 74.00 | -22.51 | PK |
| H | 7206.00 | 35.45 | 8.31 | 43.76 | 54.00 | -10.24 | AV |
| **GFSK Middle channel** | | | | | | | |
| V | 4882.00 | 50.36 | -0.38 | 49.98 | 74.00 | -24.02 | PK |
| V | 4882.00 | 43.98 | -0.38 | 43.60 | 54.00 | -10.40 | AV |
| V | 7323.00 | 42.35 | 8.83 | 51.18 | 74.00 | -22.82 | PK |
| V | 7323.00 | 33.30 | 8.83 | 42.13 | 54.00 | -11.87 | AV |
| H | 4882.00 | 48.32 | -0.38 | 47.94 | 74.00 | -26.06 | PK |
| H | 4882.00 | 38.54 | -0.38 | 38.16 | 54.00 | -15.84 | AV |
| H | 7323.00 | 41.33 | 8.83 | 50.16 | 74.00 | -23.84 | PK |
| H | 7323.00 | 33.32 | 8.83 | 42.15 | 54.00 | -11.85 | AV |
| **GFSK High channel** | | | | | | | |
| V | 4960.00 | 51.86 | -0.32 | 51.54 | 74.00 | -22.46 | PK |
| V | 4960.00 | 41.39 | -0.32 | 41.07 | 54.00 | -12.93 | AV |
| V | 7440.00 | 45.31 | 9.35 | 54.66 | 74.00 | -19.34 | PK |
| V | 7440.00 | 36.22 | 9.35 | 45.57 | 54.00 | -8.43 | AV |
| H | 4960.00 | 49.87 | -0.32 | 49.55 | 74.00 | -24.45 | PK |
| H | 4960.00 | 40.50 | -0.32 | 40.18 | 54.00 | -13.82 | AV |
| H | 7440.00 | 42.36 | 9.35 | 51.71 | 74.00 | -22.29 | PK |
| H | 7440.00 | 34.90 | 9.35 | 44.25 | 54.00 | -9.75 | AV |

Remark:
1.Emission Level = Meter Reading + Factor,
Factor = Antenna Factor + Cable Loss – Pre-amplifier.
Over= Emission Level - Limit
2.If peak below the average limit, the average emission was no test.
3. In restricted bands of operation, The spurious emissions below the permissible value more than 20dB
4. The amplitude of spurious emissions which are attenuated by more than 20dB below the permissible value has no need to be reported.
5.All the Modulation are test, the worst mode is GFSK, the data recording in the report.

# 8. Radiated Band Emission Measurement And Restricted Bands Of Operation

## 8.1 Block Diagram Of Test Setup

Radiated Emission Test-Up Frequency Above 1GHz

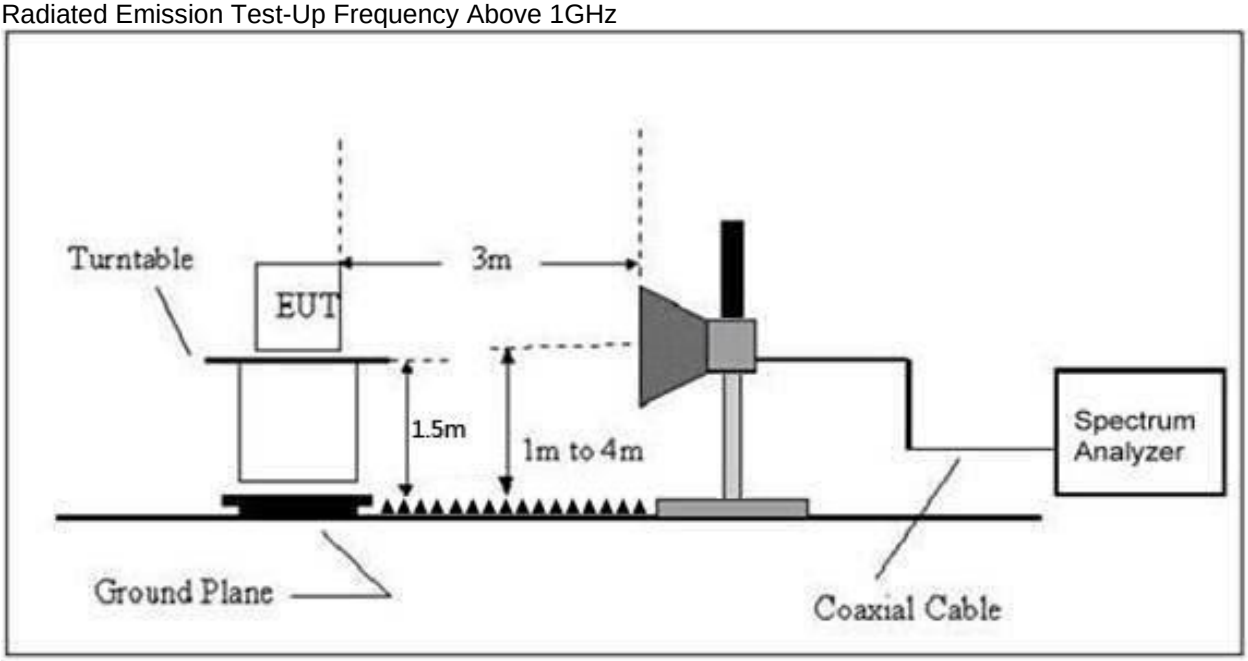


## 8.2 Limit

FCC Part15 C Section 15.209 and 15.205

(a) Except as shown in paragraph (d) of this section, only spurious emissions are permitted in any of the frequency bands listed below:

| MHz | MHz | MHz | GHz |
|---|---|---|---|
| 0.090-0.110 | 16.42-16.423 | 399.9-410 | 4.5-5.15 |
| [1]0.495-0.505 | 16.69475-16.69525 | 608-614 | 5.35-5.46 |
| 2.1735-2.1905 | 16.80425-16.80475 | 960-1240 | 7.25-7.75 |
| 4.125-4.128 | 25.5-25.67 | 1300-1427 | 8.025-8.5 |
| 4.17725-4.17775 | 37.5-38.25 | 1435-1626.5 | 9.0-9.2 |
| 4.20725-4.20775 | 73-74.6 | 1645.5-1646.5 | 9.3-9.5 |
| 6.215-6.218 | 74.8-75.2 | 1660-1710 | 10.6-12.7 |
| 6.26775-6.26825 | 108-121.94 | 1718.8-1722.2 | 13.25-13.4 |
| 6.31175-6.31225 | 123-138 | 2200-2300 | 14.47-14.5 |
| 8.291-8.294 | 149.9-150.05 | 2310-2390 | 15.35-16.2 |
| 8.362-8.366 | 156.52475-156.52525 | 2483.5-2500 | 17.7-21.4 |
| 8.37625-8.38675 | 156.7-156.9 | 2690-2900 | 22.01-23.12 |
| 8.41425-8.41475 | 162.0125-167.17 | 3260-3267 | 23.6-24.0 |
| 12.29-12.293 | 167.72-173.2 | 3332-3339 | 31.2-31.8 |
| 12.51975-12.52025 | 240-285 | 3345.8-3358 | 36.43-36.5 |
| 12.57675-12.57725 | 322-335.4 | 3600-4400 | ([2]) |
| 13.36-13.41 | | | |

LIMITS OF RADIATED EMISSION MEASUREMENT (Above 1000MHz)

| FREQUENCY (MHz) | Limit (dBuV/m) (at 3M) | |
|---|---|---|
| | PEAK | AVERAGE |
| Above 1000 | 74 | 54 |

Notes:
(1)The limit for radiated test was performed according to FCC PART 15C.
(2)The tighter limit applies at the band edges.
(3)Emission level (dBuV/m)=20log Emission level (uV/m).

## 8.3 Test Procedure

| Receiver Parameter | Setting |
|---|---|
| Attenuation | Auto |
| Start Frequency | 2300MHz |
| Stop Frequency | 2520 |
| RB / VB (emission in restricted band) | 1 MHz / 1 MHz for Peak, 1 MHz / 1/T Hz for Average |

Above 1GHz test procedure as below:

a. The EUT was placed on the top of a rotating table 1.5 meters above the ground at a 3 meter chamber. The table was rotated 360 degrees to determine the position of the highest radiation.

b. The EUT was set 3 meters away from the interference-receiving antenna, which was mounted on the top of a variable-height antenna tower.

c. The antenna height is varied from one meter to four meters above the ground to determine the maximum value of the field strength. Both horizontal and vertical polarizations of the antenna are set to make the measurement.

d. For each suspected emission, the EUT was arranged to its worst case and then the antenna was tuned to heights from 1 meter to 4 meters and the rota table was turned from 0 degrees to 360 degrees to find the maximum reading.

e. The test-receiver system was set to Peak Detect Function and Specified Bandwidth with Maximum Hold Mode.

f. If the emission level of the EUT in peak mode was 10dB lower than the limit specified, then testing could be stopped and the peak values of the EUT would be reported. Otherwise the emissions that did not have 10dB margin would be re-tested one by one using peak, quasi-peak or average method as specified and then reported in a data sheet.

g. Test the EUT in the lowest channel, the Highest channel.

Note:

Both horizontal and vertical antenna polarities were tested and performed pretest to three orthogonal axis. The worst case emissions were reported.

## 8.4 EUT Operating Conditions

The EUT was configured for testing in a typical fashion (as a customer would normally use it). The EUT has been programmed to continuously transmit during test. This operating condition was tested and used to collect the included data.

## 8.5 Test Result

| | Polar (H/V) | Frequency (MHz) | Reading Level (dBuV/m) | Correct Factor (dB) | Measure-ment (dBuV/m) | Limits (dBuV/m) | | Result |
|---|---|---|---|---|---|---|---|---|
| | | | | | PK | PK | AV | |
| GFSK | Low Channel 2402MHz | | | | | | | |
| | H | 2390.00 | 57.52 | -6.70 | 50.82 | 74.00 | 54.00 | PASS |
| | H | 2400.00 | 50.35 | -6.71 | 43.64 | 74.00 | 54.00 | PASS |
| | V | 2390.00 | 57.03 | -6.70 | 50.33 | 74.00 | 54.00 | PASS |
| | V | 2400.00 | 49.02 | -6.71 | 42.31 | 74.00 | 54.00 | PASS |
| | High Channel 2480MHz | | | | | | | |
| | H | 2483.50 | 56.13 | -6.79 | 49.34 | 74.00 | 54.00 | PASS |
| | H | 2485.00 | 50.46 | -6.81 | 43.65 | 74.00 | 54.00 | PASS |
| | V | 2483.50 | 57.51 | -6.79 | 50.72 | 74.00 | 54.00 | PASS |
| | V | 2485.00 | 50.25 | -6.81 | 43.44 | 74.00 | 54.00 | PASS |
| π/4DQPSK | Low Channel 2402MHz | | | | | | | |
| | H | 2390.00 | 57.65 | -6.70 | 50.95 | 74.00 | 54.00 | PASS |
| | H | 2400.00 | 50.14 | -6.71 | 43.43 | 74.00 | 54.00 | PASS |
| | V | 2390.00 | 58.31 | -6.70 | 51.61 | 74.00 | 54.00 | PASS |
| | V | 2400.00 | 49.45 | -6.71 | 42.74 | 74.00 | 54.00 | PASS |
| | High Channel 2480MHz | | | | | | | |
| | H | 2483.50 | 57.39 | -6.79 | 50.60 | 74.00 | 54.00 | PASS |
| | H | 2485.00 | 50.64 | -6.81 | 43.83 | 74.00 | 54.00 | PASS |
| | V | 2483.50 | 56.48 | -6.79 | 49.69 | 74.00 | 54.00 | PASS |
| | V | 2485.00 | 47.52 | -6.81 | 40.71 | 74.00 | 54.00 | PASS |

**Remark:**
1. Emission Level = Meter Reading + Factor,
Factor = Antenna Factor + Cable Loss – Pre-amplifier.
Over= Emission Level - Limit
2. If the PK measured levels comply with average limit, then the average level were deemed to comply with average limit.
3 In restricted bands of operation, The spurious emissions below the permissible value more than 20dB
4. The amplitude of spurious emissions which are attenuated by more than 20dB below the permissible value has no need to be reported.

# 9. Conducted Emission

## 9.1 Block Diagram Of Test Setup

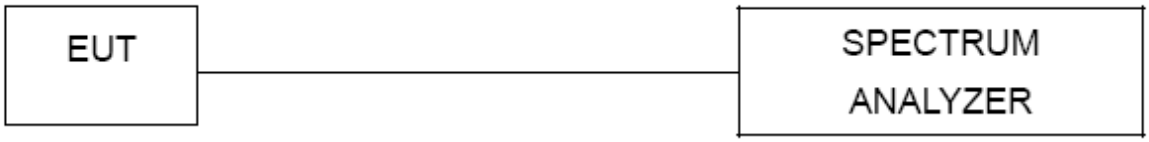


## 9.2 Limit

Regulation 15.247 (d),In any 100 kHz bandwidth outside the frequency band in which the spread spectrum or digitally modulated intentional radiator is operating, the radio frequency power that is produced by the intentional radiator shall be at least 20 dB below that in the 100 kHz bandwidth within the band that contains the highest level of the desired power, based on either an RF conducted or a radiated measurement, provided the transmitter demonstrates compliance with the peak conducted power limits. If the transmitter complies with the conducted power limits based on the use of RMS averaging over a time interval, as permitted under paragraph (b)(3) of this section, the attenuation required under this paragraph shall be 30 dB instead of 20 dB. Attenuation below the general limits specified in §15.209(a) is not required. In addition, radiated emissions which fall in the restricted bands, as defined in §15.205(a), must also comply with the radiated emission limits specified in §15.209(a) (see §15.205(c))

## 9.3 Test Procedure

1. Remove the antenna from the EUT and then connect a low RF cable from the antenna port to the spectrum;

2. Set the spectrum analyzer:

Below 1GHz:

RBW = 100kHz, VBW = 300kHz, Sweep = auto

Detector function = peak, Trace = max hold

Above 1GHz:

RBW = 100kHz, VBW = 300kHz, Sweep = auto

Detector function = peak, Trace = max hold