# SPECIFICATION

## Ceramic Antenna 3216 Size

## 2400-2500 MHz

## P/N: HXD-BT5-HM02

Shenzhen HengXinDa Technology Co., Ltd.
Address: 301, No.8, Sanhe Huaqiao District 2, Tongsheng Community, Dalang Street, Longhua District, Shenzhen City, China.

## 1. Frequency

2400-2500 MHz

## 2. Applications

For Miniaturized Bluetooth System

## 3. Dimensions (Unit : mm)

### 1). Over View :

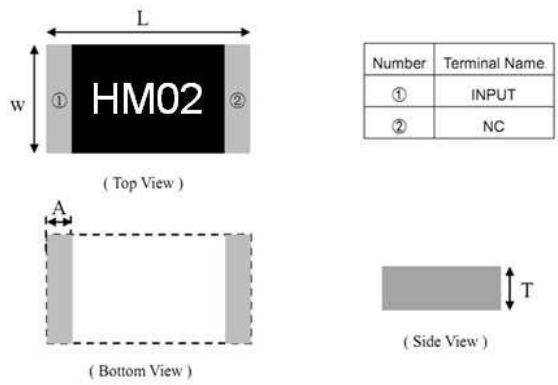


| Number | Terminal Name |
|---|---|
| ① | INPUT |
| ② | NC |

| Symbols | L | W | T | A |
|---|---|---|---|---|
| Dimensions | 3.2+/-0.2 | 1.6+/-0.2 | 0.5+/-0.1 | 0.4+/-0.1 |

### 2).PCB LYOUT VIEW:

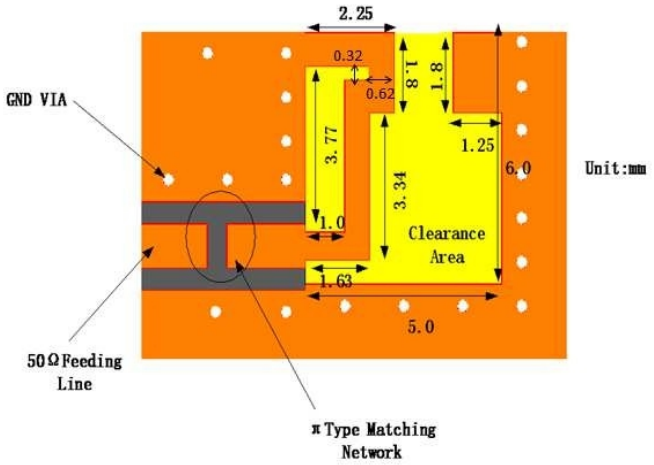

## 4. Evaluation Board Size and Matching Circuits

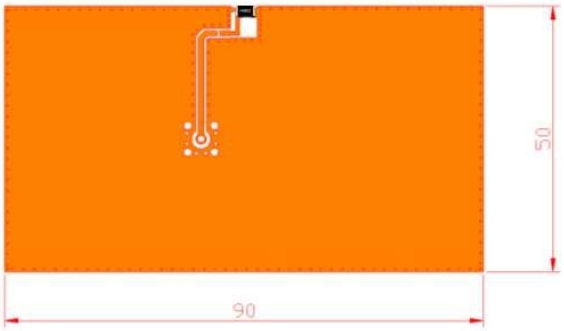


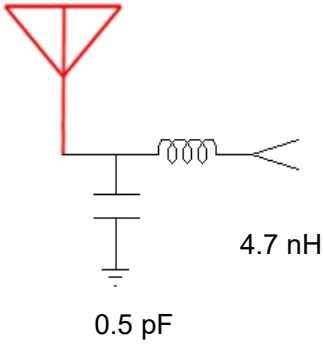


## 5. Electrical Characteristics

| | |
|---|---|
| Part Number | HM3216ANT2450-HM02 |
| Central Frequency | 2450 MHz |
| Bandwidth | 100(typ.) MHz |
| V.S.W.R | ≤2.0 |
| Peak Gain | 4.34 dBi |
| Impedance | 50 Ohm |
| Polarization | Linear |
| Azimuth Beamwidth | Omni-directional |

## 6. Return Loss (S11)

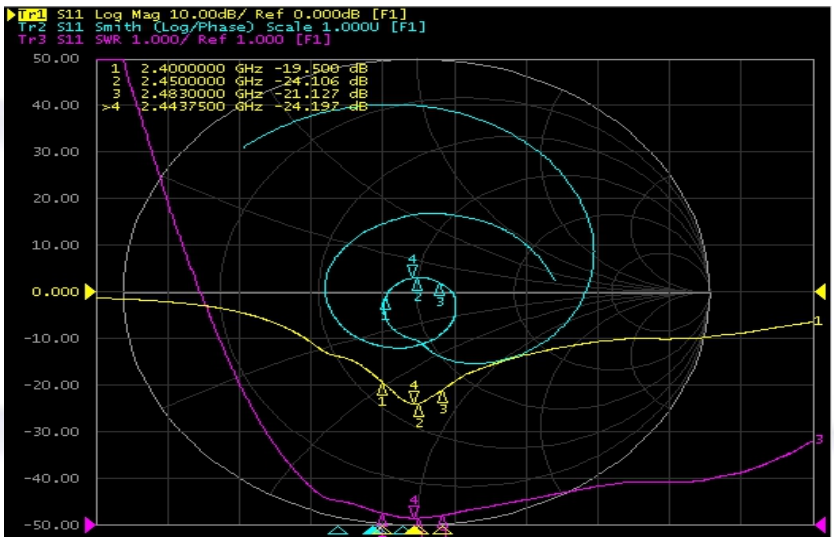


## 7. Radiation Pattern & Efficiency

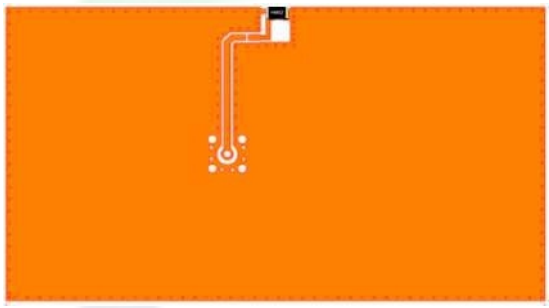

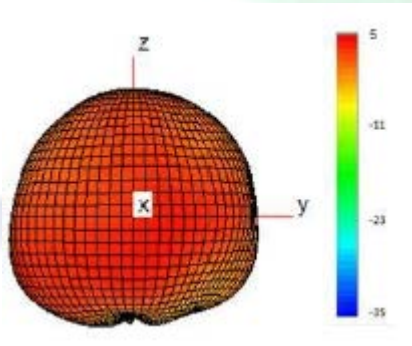


| Frequency (MHz) | 2400 | 2450 | 2500 |
|---|---|---|---|
| Efficiency (dB) | -1.87 | -1.67 | -1.94 |
| Efficiency (%) | 65 | 68 | 64 |
| Gain (dBi) | 3.12 | 4.34 | 3.45 |

## 8. Reflow Soldering Standard Condition

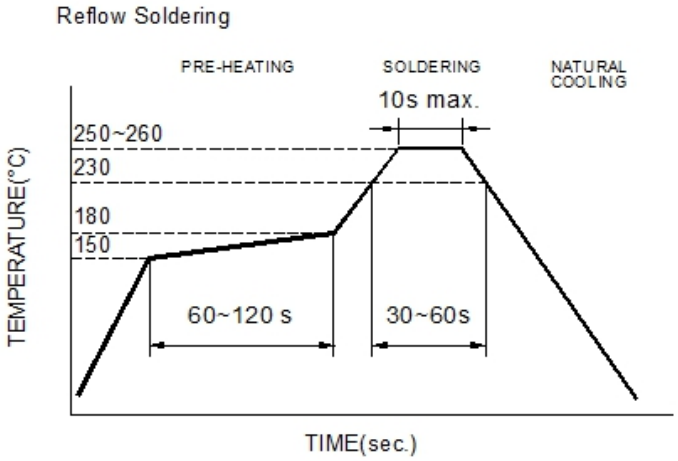


## 9. Packaging and Dimensions

- Plastic Tape

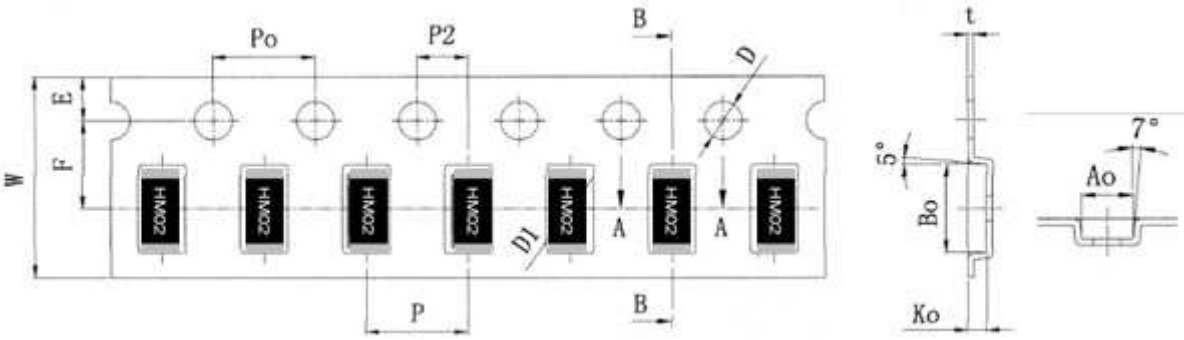


| 外觀 | 規格 | 公差 |
|---|---|---|
| W | 8.00 | ±0.10 |
| P | 4.00 | ±0.10 |
| E | 1.75 | ±0.10 |
| F | 3.50 | ±0.05 |
| P2 | 2.00 | ±0.05 |
| D | 1.50 | +0.10 −0.00 |
| D1 | 1.00 | ±0.10 |
| Po | 4.00 | ±0.10 |
| 10Po | 40.00 | ±0.20 |

| 外觀 | 規格 | 公差 |
|---|---|---|
| Ao | 1.85 | ±0.10 |
| Bo | 3.50 | ±0.10 |
| Ko | 0.73 | ±0.10 |
| t | 0.23 | ±0.05 |

- **Remarks for Package**

Reserve a length of 150~200mm for the trailer of the carrier and 250~300 mm for the leader of the carr er and further 250mm of cover tape at the leading part of the carrier.

- **Reel (6000 pcs/Reel)**

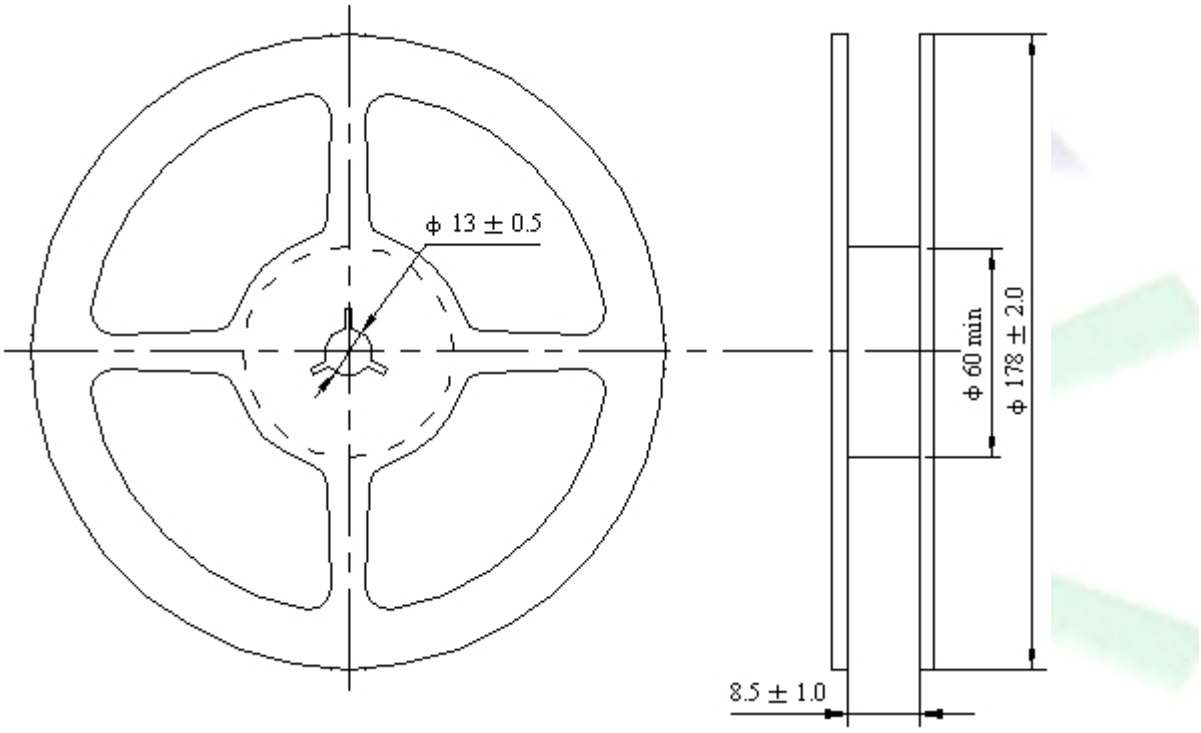


- **Storage Period**

Oxidizable Material, 12 months in vacuum sealed bag, please repack within 168 hours by re-seal the package treatment after using.

Storage Temperature Range : <30 degree C, Humidity : <60%RH

## 10. Dependability Test

| Test item | Test condition / Test method | Specification |
|---|---|---|
| Solderability<br>IEC 60068-2-58<br>GB/T2423.28 | *Solder bath temperature：240±5℃<br>*Immersion time：2±0.5 sec<br>Solder：Sn96.5Ag3.0Gu0.5 for lead-free. | At least 95% of a surface of each terminal electrode must be covered by fresh solder. |
| Leaching (Resistance to dissolution of metallization)<br>JIS C5101 | *Solder bath temperature：260±5℃<br>*Leaching immersion time：10±1 sec<br>Solder : Sn96.5 Ag3.0 Gu0.5 for lead-free. | Loss of metallization on the edges of each electrode shall not exceed 25%. |
| Resistance to soldering heat<br>IEC 60068-2-58<br>GB/T2423.28 | *Preheating temperature：120~150℃, 1 minute.<br>*Solder temperature：260±5℃<br>*Immersion time：10±1 sec Solder：Sn96.5Ag3.0Gu0.5 for lead-free<br>Measurement to be made after keeping at room temperature for 24±2 hrs. | No mechanical damage.<br>Electrical specification shall satisfy the descriptions in electrical characteristics at the room temperature.<br>Loss of metallization on the edges of each electrode shall not exceed 25%. |
| Drop Test<br>IEC 60068-2-32<br>GB/T2423.8<br>Customer’s specification. | *Height：50 cm<br>*Test Surface: Rigid surface of concrete or steel.<br>*Times：6 surfaces for each units；2 times for each side. | No mechanical damage.<br>Electrical specification shall satisfy the descriptions in electrical characteristics at the room temperature. |
| Vibration<br>IEC 60068-2-6<br>GB/T 2423.10 | *Frequency：10Hz~55Hz~10Hz(1min)<br>*Total amplitude：1.5mm<br>*Test times：6hrs.(Two hrs each in three mutually perpendicular directions) | No mechanical damage.<br>Electrical specification shall satisfy the descriptions in electrical characteristics at the room temperature. |
| Adhesive Strength of Termination<br>IEC60068-2-21<br>GB/T 2423.6 | *Pressurizing force：<br>5N(≦0603)；10N(>0603)<br>*Test time:10±1 sec | No remarkable damage or removal of the termination. |

| | | |
|---|---|---|
| Bending test<br>IEC 60068-2-21<br>GB/T 2423.29 | The middle part of substrate shall be pressurized by means of the pressurizing rod at a rate of about 1 mm/s per second until the deflection becomes 2mm and then pressure shall be maintained for 10±1 sec.<br>Measurement to be made after keeping at room temperature for 24±2 hours. | No mechanical damage.<br>Electrical specification shall satisfy the descriptions in electrical characteristics at the room temperature. |
| Temperature cycle<br>IEC60068-2-14<br>GB/T 2423.22 | 30 minutes at-40℃±2℃.<br>10~15 minutes at room temperature.<br>30minutes at +85℃±2℃.<br>10~15 minutes at room temperature.<br>Total 100 continuous cycles Measurement to be made after keeping at room temperature for 24±2 hrs. | No mechanical damage.<br>Electrical specification shall satisfy the descriptions in electrical characteristics at the room temperature. |
| High temperature<br>IEC 60068-2-2<br>GB/T2423.2 | *Temperature：85±2℃.<br>*Test duration：500+24/-0 hours.<br>Measurement to be made after keeping at room temperature for 24±2 hrs. | No mechanical damage.<br>Electrical specification shall satisfy the descriptions in electrical characteristics. |
| Humidity (steady conditions)<br>IEC60068-2-3<br>GB/T 2423.3 | *Humidity：85±5%R.H.<br>*Temperature：85±2℃.<br>*Time：500+24/-0 hrs.<br>Measurement to be made after keeping at room temperature for 24±2 hrs<br>※ 200hrs measuring the first data then 300hrs data. | No mechanical damage.<br>Electrical specification shall satisfy the descriptions in electrical characteristics at the room temperature. |
| Low temperature<br>IEC 60068-2-1<br>GB/T2423.1 | *Temperature：-40±2℃.<br>*Test duration：500+24/-0 hours<br>Measurement to be made after keeping at room temperature for 24±2 hrs. | No mechanical damage.<br>Electrical specification shall satisfy the descriptions in electrical characteristics at the room temperature. |