TEST REPORT

Report No.:	BCTC2311288462E
Applicant:	Shenzhen Elenose Technology Co. LTD
Product Name:	Air conduction wireless earphone
Model/Type Reference:	D7
Tested Date:	2023-11-10 to 2023-11-16
Issued Date:	2023-11-17

Shenzhen BCTC Testing Co., Ltd.

FCC ID: 2AQ9R-D7

Product Name:	Air conduction wireless earphone
Trademark:	N/A
Model/Type Reference:	D7
Prepared For:	Shenzhen Elenose Technology Co. LTD
Address:	Room 423, Building 8, Zijing No.1, Huahui Road, Tongsheng Community, Dalang Street, Longhua District, Shenzhen, Guangdong, China
Manufacturer:	Shenzhen Elenose Technology Co. LTD
Address:	Room 423, Building 8, Zijing No.1, Huahui Road, Tongsheng Community, Dalang Street, Longhua District, Shenzhen, Guangdong, China
Prepared By:	Shenzhen BCTC Testing Co., Ltd.
Address:	1-2/F., Building B, Pengzhou Industrial Park, No.158, Fuyuan 1st Road, Zhancheng, Fuhai Subdistrict, Bao'an District, Shenzhen, Guangdong, China
Sample Received Date:	2023-11-10
Sample Tested Date:	2023-11-10 to 2023-11-16
Issue Date:	2023-11-17
Report No.:	BCTC2311288462E
Test Standards:	FCC Part15.247 ANSI C63.10-2013
Test Results:	PASS
Remark:	This is Bluetooth Classic radio test report.

Tested by:

Shanshan. Zhang

Shanshan. Zhang / Project Handler

Approved by:

Zero Zhou/Reviewer

The test report is effective only with both signature and specialized stamp.This result(s) shown in this report refer only to the sample(s) tested. Without written approval of Shenzhen BCTC Testing Co., Ltd, this report can't be reproduced except in full.The tested sample(s) and the sample information are provided by the client.

Table Of Content

Test Report Declaration Page
1. Version 5
2. Test Summary 6
3. Measurement Uncertainty 7
4. Product Information And Test Setup 8
4.1 Product Information 8
4.2 Test Setup Configuration 9
4.3 Support Equipment 9
4.4 Channel List 10
4.5 Test Mode 10
4.6 Table Of Parameters Of Text Software Setting 10
5. Test Facility And Test Instrument Used 11
5.1 Test Facility 11
5.2 Test Instrument Used 11
6. Conducted Emissions 13
6.1 Block Diagram Of Test Setup 13
6.2 Limit 13
6.3 Test procedure 13
6.4 EUT operating Conditions 13
6.5 Test Result 14
7. Radiated emissions 16
7.1 Block Diagram Of Test Setup 16
7.2 Limit 17
7.3 Test procedure 18
7.4 EUT operating Conditions 19
7.5 Test Result 19
8. Radiated Band Emission Measurement And Restricted Bands Of Operation 23
8.1 Block Diagram Of Test Setup 23
8.2 Limit 23
8.3 Test procedure 24
8.4 EUT operating Conditions 24
8.5 Test Result 25
9. Spurious RF Conducted Emissions 26
9.1 Block Diagram Of Test Setup 26
9.2 Limit 26
9.3 Test procedure 26
9.4 Test Result 27
10. 20 dB Bandwidth 48
10.1 Block Diagram Of Test Setup 48
10.2 Limit 48
10.3 Test procedure 48
10.4 Test Result 48
11. Maximum Peak Output Power 54
11.1 Block Diagram Of Test Setup 54
11.2 Limit 54
11.3 Test procedure 54
11.4 Test Result 54

12. Hopping Channel Separation 60
12.1 Block Diagram Of Test Setup 60
12.2 Limit 60
12.3 Test procedure 60
12.4 Test Result 60
13. Number Of Hopping Frequency 66
13.1 Block Diagram Of Test Setup 66
13.2 Limit 66
13.3 Test procedure 66
13.4 Test Result 66
14. Dwell Time 69
14.1 Block Diagram Of Test Setup 69
14.2 Limit 69
14.3 Test procedure 69
14.4 Test Result 69
15. Antenna Requirement 75
15.1 Limit 75
15.2 Test Result 75
16. EUT Photographs 76
17. EUT Test Setup Photographs 77

(Note: N/A Means Not Applicable)

1. Version

Report No.	Issue Date	Description	Approved
BCTC2311288462E	2023-11-17	Original	Valid

2. Test Summary

The Product has been tested according to the following specifications:

No.	Test Parameter	Clause No	Results
1	Conducted emission AC power port	§15.207	PASS
2	Conducted peak output power for FHSS	§15.247(b)(1)	PASS
3	20dB Occupied bandwidth	§15.247(a)(1)	PASS
4	Hopping channel separation	§15.247(a)(1)	PASS
5	Number of hopping frequencies	§15.247(a)(1)(iii)	PASS
6	Dwell Time	§15.247(a)(1)(iii)	PASS
7	Spurious RF conducted emissions	§15.247(d)	PASS
8	Band edge	§15.247(d)	PASS
9	Spurious radiated emissions for transmitter	§15.247(d) & §15.209 & §15.205	PASS
10	Antenna Requirement	15.203	PASS

3. Measurement Uncertainty

Where relevant, the following measurement uncertainty levels have been estimated for tests performed on the Product as specified in CISPR 16-4-2. This uncertainty represents an expanded uncertainty expressed at approximately the 95% confidence level using a coverage factor of k=2.

No.	Item	Uncertainty
1	3m chamber Radiated spurious emission(30MHz-1GHz)	U=4.3dB
2	3m chamber Radiated spurious emission(9KHz-30MHz)	U=3.7dB
3	3m chamber Radiated spurious emission(1GHz-18GHz)	U=4.5dB
4	3m chamber Radiated spurious emission(18GHz-40GHz)	U=3.34dB
5	Conducted Emission (150kHz-30MHz)	U=3.20dB
6	Conducted Adjacent channel power	U=1.38dB
7	Conducted output power uncertainty Above 1G	U=1.576dB
8	Conducted output power uncertainty below 1G	U=1.28dB
9	humidity uncertainty	U=5.3%
10	Temperature uncertainty	U=0.59℃

4. Product Information And Test Setup

4.1 Product Information

Model/Type Reference:	D7
Model Differences:	N/A
Hardware Version:	N/A
Software Version:	N/A
Operation Frequency:	2402-2480MHz
Type of Modulation:	GFSK, π/ 4 DQPSK, 8DPSK
Number Of Channel:	79CH
Antenna installation:	Internal antenna
Antenna Gain:	3.19 dBi (Note: The antenna gain of the product comes from the antenna report provided by the customer, and the test data is affected by the customer information.)
Ratings:	DC 5V from adapter or DC 3.7V from battery

4.2 Test Setup Configuration

See test photographs attached in *EUT TEST SETUP PHOTOGRAPHS* for the actual connections between Product and support equipment.

Conducted Emission:

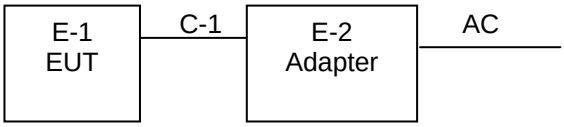

Radiated Spurious Emission:

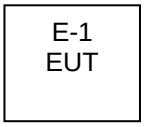

4.3 Support Equipment

No.	Device Type	Brand	Model	Series No.	Note
E-1	Air conduction wireless earphone	N/A	D7	N/A	EUT
E-2	ADAPTER	Hoco.	N18	N/A	Auxiliary

Item	Shielded Type	Ferrite Core	Length	Note
C-1	N/A	N/A	0.8 M	DC cable unshielded

Notes:
1. All the equipment/cables were placed in the worst-case configuration to maximize the emission during the test.
2. Grounding was established in accordance with the manufacturer's requirements and conditions for the intended use.

4.4 Channel List

CH	Frequency (MHz)	CH	Frequency (MHz)	CH	Frequency (MHz)	CH	Frequency (MHz)
0	2402	1	2403	2	2404	3	2405
4	2406	5	2407	6	2408	7	2409
8	2410	9	2411	10	2412	11	2413
12	2414	13	2415	14	2416	15	2417
16	2418	17	2419	18	2420	19	2421
20	2422	21	2423	22	2424	23	2425
24	2426	25	2427	26	2428	27	2429
28	2430	29	2431	30	2432	31	2433
32	2434	33	2435	34	2436	35	2437
36	2438	37	2439	38	2440	39	2441
40	2442	41	2443	42	2444	43	2445
44	2446	45	2447	46	2448	47	2449
48	2450	49	2451	50	2452	51	2453
52	2454	53	2455	54	2456	55	2457
56	2458	57	2459	58	2460	59	2461
60	2462	61	2463	62	2464	63	2465
64	2466	65	2467	66	2468	67	2469
68	2470	69	2471	70	2472	71	2473
72	2474	73	2475	74	2476	75	2477
76	2478	77	2479	78	2480	79	/

4.5 Test Mode

To investigate the maximum EMI emission characteristics generates from EUT, the test system was pre-scanning tested base on the consideration of following EUT operation mode or test configuration mode which possible have effect on EMI emission level. Each of these EUT operation mode(s) or test configuration mode(s) mentioned above was evaluated respectively.

Test Mode	Test mode	Low channel	Middle channel	High channel
1	Transmitting(GFSK)	2402MHz	2441MHz	2480MHz
2	Transmitting(π/ 4 DQPSK)	2402MHz	2441MHz	2480MHz
3	Transmitting(8DPSK)	2402MHz	2441MHz	2480MHz
4	Transmitting (Conducted emission & Radiated emission)			

Note:
(1) The measurements are performed at the highest, middle, lowest available channels.
(2) Fully-charged battery is used during the test

4.6 Table Of Parameters Of Text Software Setting

During testing channel & power controlling software provided by the customer was used to control the operating channel as well as the output power level. The RF output power selection is for the setting of RF output power expected by the customer and is going to be fixed on the firmware of the final end product power parameters

Test software Version	FCC_assist		
Frequency	2402 MHz	2441 MHz	2480 MHz
Parameters	DEF	DEF	DEF

5. Test Facility And Test Instrument Used

5.1 Test Facility

All measurement facilities used to collect the measurement data are located at Shenzhen BCTC Testing Co., Ltd. Address:1-2/F., Building B, Pengzhou Industrial Park, No.158, Fuyuan 1st Road, Zhancheng, Fuhai Subdistrict, Bao'an District, Shenzhen, Guangdong, China. The site and apparatus are constructed in conformance with the requirements of ANSI C63.4 and CISPR 16-1-1 other equivalent standards.
FCC Test Firm Registration Number: 712850
FCC Designation Number: CN1212
ISED Registered No.: 23583
ISED CAB identifier: CN0017

5.2 Test Instrument Used

Conducted Emissions Test					
Equipment	**Manufacturer**	**Model#**	**Serial#**	**Last Cal.**	**Next Cal.**
Receiver	R&S	ESR3	102075	May 15, 2023	May 14, 2024
LISN	R&S	ENV216	101375	May 15, 2023	May 14, 2024
Software	Frad	EZ-EMC	EMC-CON 3A1	\	\
Pulse limiter	Schwarzbeck	VTSD9561-F	01323	Sept. 22, 2023	Sept. 21, 2024

RF Conducted Test					
Equipment	**Manufacturer**	**Model#**	**Serial#**	**Last Cal.**	**Next Cal.**
Power Metter	Keysight	E4419	\	May 15, 2023	May 14, 2024
Power Sensor (AV)	Keysight	E9300A	\	May 15, 2023	May 14, 2024
Signal Analyzer20kHz-26.5GHz	Keysight	N9020A	MY49100060	May 15, 2023	May 14, 2024
Spectrum Analyzer9kHz-40GHz	R&S	FSP40	100363	May 15, 2023	May 14, 2024
Radio frequency control box	MAIWEI	MW100-RFCB	\	\	\
Software	MAIWEI	MTS 8310	\	\	\

Radiated Emissions Test (966 Chamber01)					
Equipment	**Manufacturer**	**Model#**	**Serial#**	**Last Cal.**	**Next Cal.**
966 chamber	ChengYu	966 Room	966	May 15, 2023	May 14, 2026
Receiver	R&S	ESR3	102075	May 15, 2023	May 14, 2024
Receiver	R&S	ESRP	101154	May 15, 2023	May 14, 2024
Amplifier	Schwarzbeck	BBV9744	9744-0037	May 15, 2023	May 14, 2024
TRILOG Broadband Antenna	Schwarzbeck	VULB9163	942	May 29, 2023	May 28, 2024
Loop Antenna(9KHz -30MHz)	Schwarzbeck	FMZB1519B	00014	May 31, 2023	May 30, 2024
Amplifier	SKET	LAPA_01G18G-45dB	SK2021040901	May 15, 2023	May 14, 2024
Horn Antenna	Schwarzbeck	BBHA9120D	1541	May 31, 2023	May 30, 2024
Amplifier(18GHz-40GHz)	MITEQ	TTA1840-35-HG	2034381	May 15, 2023	May 14, 2024
Horn Antenn(18GHz-40GHz)	Schwarzbeck	BBHA9170	00822	May 31, 2023	May 30, 2024
Spectrum Analyzer9kHz-40GHz	R&S	FSP40	100363	May 15, 2023	May 14, 2024
Software	Frad	EZ-EMC	FA-03A2 RE	\	\

6. Conducted Emissions

6.1 Block Diagram Of Test Setup

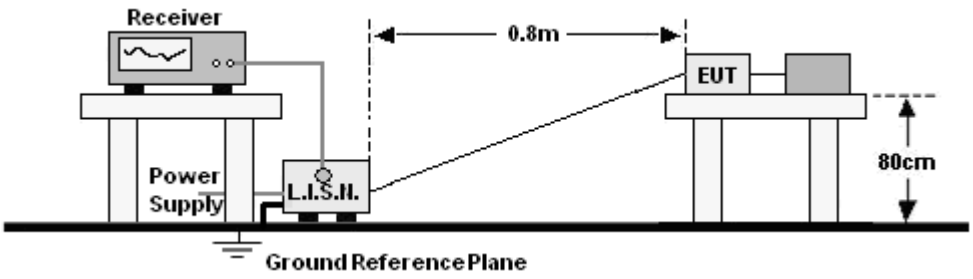

6.2 Limit

Frequency (MHz)	Limit (dBuV)	
	Quas-peak	Average
0.15 -0.5	66 - 56 *	56 - 46 *
0.50 -5.0	56.00	46.00
5.0 -30.0	60.00	50.00

Notes:
1. *Decreasing linearly with logarithm of frequency.
2. The lower limit shall apply at the transition frequencies.

6.3 Test procedure

Receiver Parameters	Setting
Attenuation	10 dB
Start Frequency	0.15 MHz
Stop Frequency	30 MHz
IF Bandwidth	9 kHz

a. The Product was placed on a nonconductive table 0.8 m above the horizontal ground reference plane, and 0.4 m from the vertical ground reference plane, and connected to the main through Line Impedance Stability Network (L.I.S.N).
b. The RBW of the receiver was set at 9 kHz in 150 kHz ~ 30MHz with Peak and AVG detector in Max Hold mode. Run the receiver's pre-scan to record the maximum disturbance generated from Product in all power lines in the full band.
c. For each frequency whose maximum record was higher or close to limit, measure its QP and AVG values and record.

6.4 EUT operating Conditions

The EUT was configured for testing in a typical fashion (as a customer would normally use it). The EUT has been programmed to continuously transmit during test. This operating condition was tested and used to collect the included data.

6.5 Test Result

Temperature:	26 ℃	Relative Humidity:	54%
Pressure:	101KPa	Phase :	L
Test Mode:	Transmitting	Test Voltage :	AC 120V/60Hz

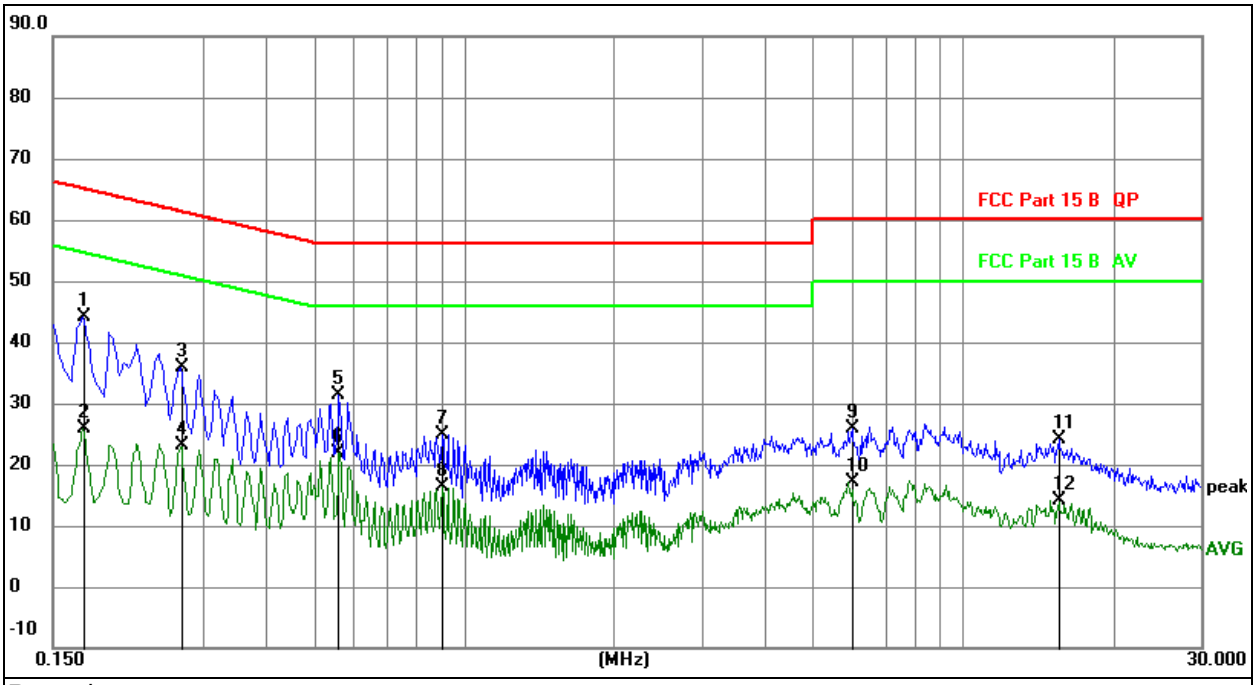

Remark:
1. All readings are Quasi-Peak and Average values.
2. Factor = Insertion Loss + Cable Loss.
3. Measurement = Reading Level + Correct Factor
4. Over = Measurement - Limit

No.	Mk.	Freq.	Reading Level	Correct Factor	Measure-ment	Limit	Over	
		MHz		dB	dBuV	dBuV	dB	Detector
1	*	0.1722	24.42	19.77	44.19	64.85	-20.66	QP
2		0.1722	6.10	19.77	25.87	54.85	-28.98	AVG
3		0.2701	16.10	19.83	35.93	61.11	-25.18	QP
4		0.2701	3.27	19.83	23.10	51.11	-28.01	AVG
5		0.5611	11.44	19.84	31.28	56.00	-24.72	QP
6		0.5611	2.01	19.84	21.85	46.00	-24.15	AVG
7		0.9039	4.96	19.91	24.87	56.00	-31.13	QP
8		0.9039	-3.48	19.91	16.43	46.00	-29.57	AVG
9		5.9925	5.78	20.20	25.98	60.00	-34.02	QP
10		5.9925	-3.13	20.20	17.07	50.00	-32.93	AVG
11		15.5523	4.12	19.89	24.01	60.00	-35.99	QP
12		15.5523	-5.65	19.89	14.24	50.00	-35.76	AVG

Temperature:	26 ℃	Relative Humidity:	54%
Pressure:	101KPa	Test Voltage:	AC120V/60Hz
Test Mode:	Transmitting	Polarization :	N

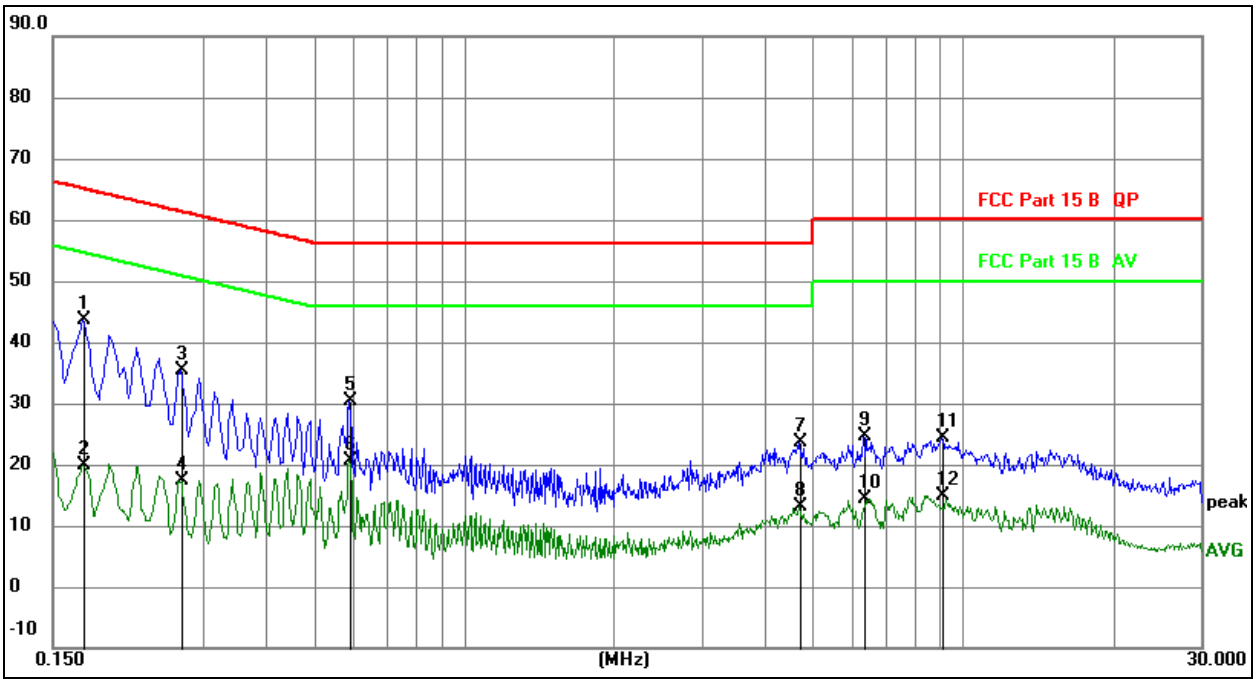

Remark:
1. All readings are Quasi-Peak and Average values.
2. Factor = Insertion Loss + Cable Loss.
3. Measurement = Reading Level + Correct Factor
4. Over = Measurement - Limit

No.	Mk.	Freq.	Reading Level	Correct Factor	Measure-ment	Limit	Over	
		MHz		dB	dBuV	dBuV	dB	Detector
1	*	0.1725	23.81	19.78	43.59	64.84	-21.25	QP
2		0.1725	0.10	19.78	19.88	54.84	-34.96	AVG
3		0.2714	15.65	19.83	35.48	61.07	-25.59	QP
4		0.2714	-2.48	19.83	17.35	51.07	-33.72	AVG
5		0.5910	10.53	19.84	30.37	56.00	-25.63	QP
6		0.5910	0.79	19.84	20.63	46.00	-25.37	AVG
7		4.7040	3.10	20.50	23.60	56.00	-32.40	QP
8		4.7040	-7.28	20.50	13.22	46.00	-32.78	AVG
9		6.3375	4.52	20.11	24.63	60.00	-35.37	QP
10		6.3375	-5.63	20.11	14.48	50.00	-35.52	AVG
11		9.0825	4.37	19.90	24.27	60.00	-35.73	QP
12		9.0825	-4.96	19.90	14.94	50.00	-35.06	AVG

7. Radiated emissions

7.1 Block Diagram Of Test Setup

（A）Radiated Emission Test-Up Frequency Below 30MHz

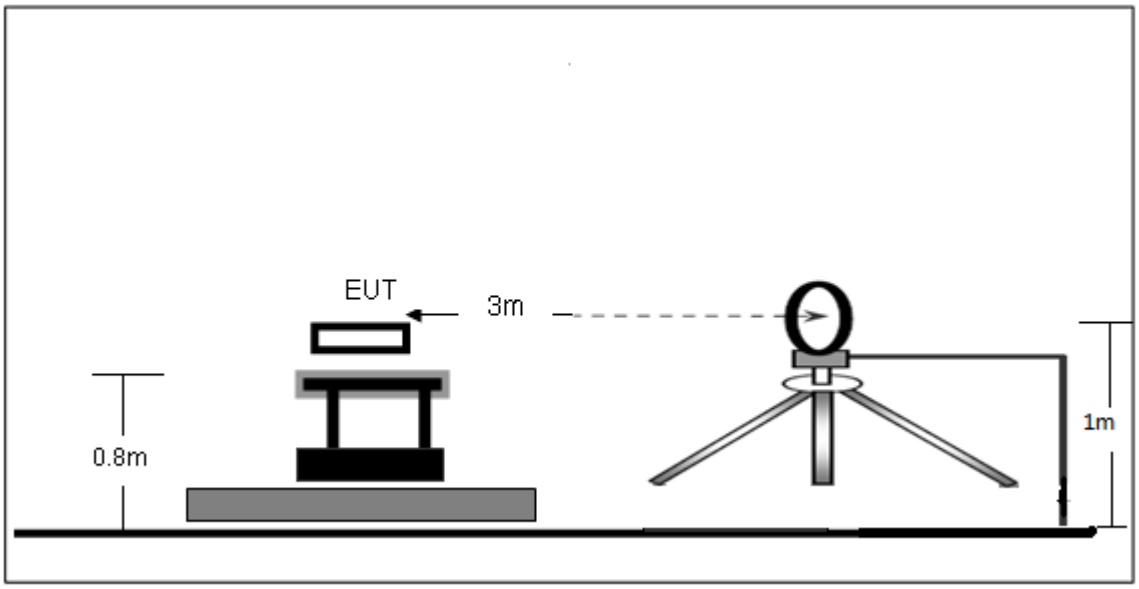

（B）Radiated Emission Test-Up Frequency 30MHz~1GHz

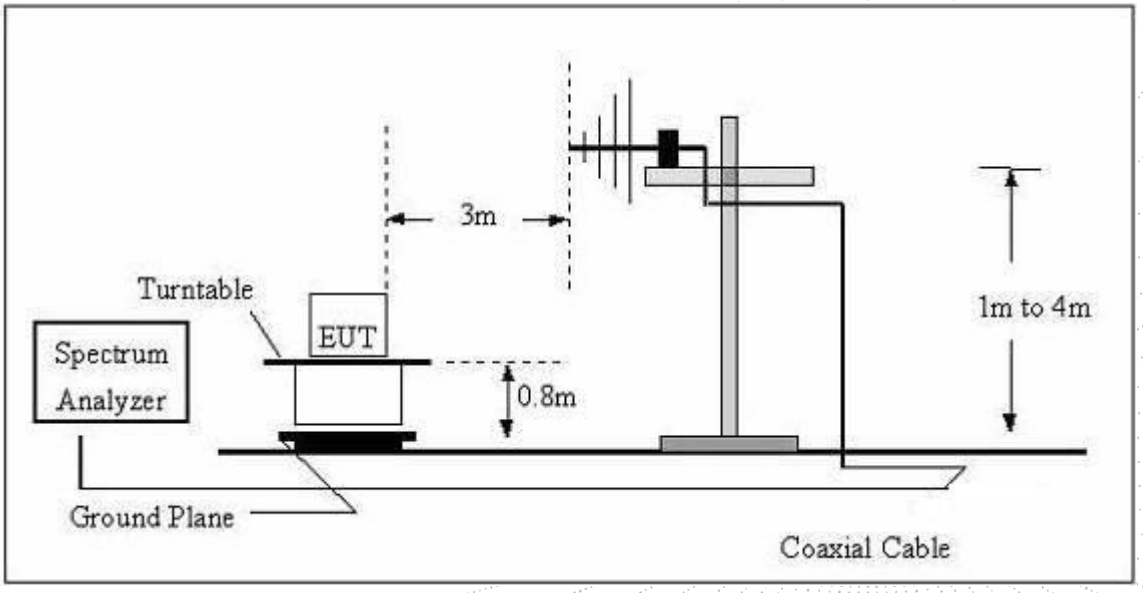

（C）Radiated Emission Test-Up Frequency Above 1GHz

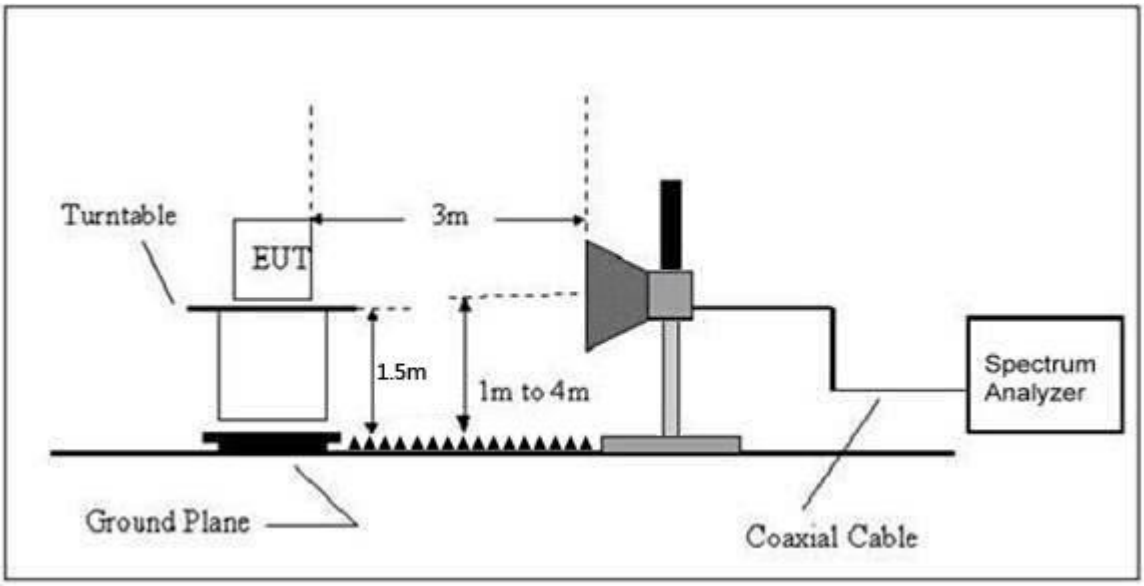

7.2 Limit

20dBc in any 100 kHz bandwidth outside the operating frequency band. In case the emission fall within the restricted band specified on 15.205(a), then the 15.209(a) limit in the table below has to be followed.

Frequency	Field Strength	Distance	Field Strength Limit at 3m Distance	
(MHz)	uV/m	(m)	uV/m	dBuV/m
0.009 ~ 0.490	2400/F(kHz)	300	10000 * 2400/F(kHz)	$20\log^{(2400/F(kHz))} + 80$
0.490 ~ 1.705	24000/F(kHz)	30	100 * 24000/F(kHz)	$20\log^{(24000/F(kHz))} + 40$
1.705 ~ 30	30	30	100 * 30	$20\log^{(30)} + 40$
30 ~ 88	100	3	100	$20\log^{(100)}$
88 ~ 216	150	3	150	$20\log^{(150)}$
216 ~ 960	200	3	200	$20\log^{(200)}$
Above 960	500	3	500	$20\log^{(500)}$

Limits Of Radiated Emission Measurement (Above 1000MHz)

Frequency (MHz)	Limit (dBuV/m) (at 3M)	
	Peak	Average
Above 1000	74	54

Notes:
(1)The limit for radiated test was performed according to FCC PART 15C.
(2)The tighter limit applies at the band edges.
(3) Emission level (dBuV/m)=20log Emission level (uV/m).

Frequency Range Of Radiated Measurement
(a) For an intentional radiator the spectrum shall be investigated from the lowest radio frequency signal generated in the device, without going below 9 kHz, up to at least the frequency shown in this paragraph:
(1) If the intentional radiator operates below 10 GHz: to the tenth harmonic of the highest fundamental frequency or to 40 GHz, whichever is lower.
(2) If the intentional radiator operates at or above 10 GHz and below 30 GHz: to the fifth harmonic of the highest fundamental frequency or to 100 GHz, whichever is lower.
(3) If the intentional radiator operates at or above 30 GHz: to the fifth harmonic of the highest fundamental frequency or to 200 GHz, whichever is lower, unless specified otherwise elsewhere in the rules.
(4) If the intentional radiator operates at or above 95 GHz: To the third harmonic of the highest fundamental frequency or to 750 GHz, whichever is lower, unless specified otherwise elsewhere in the rules.
(5) If the intentional radiator contains a digital device, regardless of whether this digital device controls the functions of the intentional radiator or the digital device is used for additional control or function purposes other than to enable the operation of the intentional radiator, the frequency range shall be investigated up to the range specified in paragraphs (a) (1)through (4) of this section or the range applicable to the digital device, as shown in paragraph (b)(1) of this section, whichever is the higher frequency range of investigation.

7.3 Test procedure

Receiver Parameter	Setting
Attenuation	Auto
9kHz~150kHz	RBW 200Hz for QP
150kHz~30MHz	RBW 9kHz for QP
30MHz~1000MHz	RBW 120kHz for QP

Spectrum Parameter	Setting
1-25GHz	RBW 1 MHz /VBW 1 MHz for Peak, RBW 1 MHz / VBW 10Hz for Average

Below 1GHz test procedure as below:
a. The EUT was placed on the top of a rotating table 0.8 meters above the ground at a 3 meter semi-anechoic camber. The table was rotated 360 degrees to determine the position of the highest radiation.
b. The EUT was set 3 meters away from the interference-receiving antenna, which was mounted on the top of a variable-height antenna tower.
c. The antenna height is varied from one meter to four meters above the ground to determine the maximum value of the field strength. Both horizontal and vertical polarizations of the antenna are set to make the measurement.
d. For each suspected emission, the EUT was arranged to its worst case and then the antenna was tuned to heights from 1 meter to 4 meters (for the test frequency of below 30MHz, the antenna was tuned to heights 1 meter) and the rotatable table was turned from 0 degrees to 360 degrees to find the maximum reading.
e. The test-receiver system was set to Peak Detect Function and Specified Bandwidth with Maximum Hold Mode.
f. If the emission level of the EUT in peak mode was 10dB lower than the limit specified, then testing could be stopped and the peak values of the EUT would be reported. Otherwise the emissions that did not have 10dB margin would be re-tested one by one using peak, quasi-peak or average method as specified and then reported in a data sheet.

Above 1GHz test procedure as below:
a.The EUT was placed on the top of a rotating table 1.5 meters above the ground at a 3 meter camber. The table was rotated 360 degrees to determine the position of the highest radiation.
b.The EUT was set 3 meters away from the interference-receiving antenna, which was mounted on the top of a variable-height antenna tower.
c.The antenna height is varied from one meter to four meters above the ground to determine the maximum value of the field strength. Both horizontal and vertical polarizations of the antenna are set to make the measurement.
d.For each suspected emission, the EUT was arranged to its worst case and then the antenna was tuned to heights from 1 meter to 4 meters and the rota table was turned from 0 degrees to 360 degrees to find the maximum reading.
e.The test-receiver system was set to Peak Detect Function and Specified Bandwidth with Maximum Hold Mode.
f. If the emission level of the EUT in peak mode was 10dB lower than the limit specified, then testing could be stopped and the peak values of the EUT would be reported. Otherwise the emissions that did not have 10dB margin would be re-tested one by one using peak, quasi-peak or average method as specified and then reported in a data sheet.
g. Test the EUT in the lowest channel, the middlest channel, the Highest channel.
Note:
Both horizontal and vertical antenna polarities were tested and performed pretest to three orthogonal axis. The worst case emissions were reported.

7.4 EUT operating Conditions

The EUT was configured for testing in a typical fashion (as a customer would normally use it). The EUT has been programmed to continuously transmit during test. This operating condition was tested and used to collect the included data.

7.5 Test Result

Below 30MHz

Temperature:	26 ℃	Relative Humidity:	54%
Pressure:	101KPa	Test Voltage :	DC 3.7V
Test Mode:	Transmitting		

Freq.	Reading	Limit	Margin	State
(MHz)	(dBuV/m)	(dBuV/m)	(dB)	P/F
--	--	--	--	PASS
--	--	--	--	PASS

Note:
The amplitude of spurious emissions which are attenuated by more than 20dB below the permissible value has no need to be reported.
Distance extrapolation factor =40 log (specific distance/test distance)(dB);
Limit line = specific limits(dBuv) + distance extrapolation factor.

Between 30MHz – 1GHz

Temperature:	26 ℃	Relative Humidity:	54%
Pressure:	101KPa	Phase :	Horizontal
Test Mode:	Transmitting	Test Voltage:	DC 3.7V

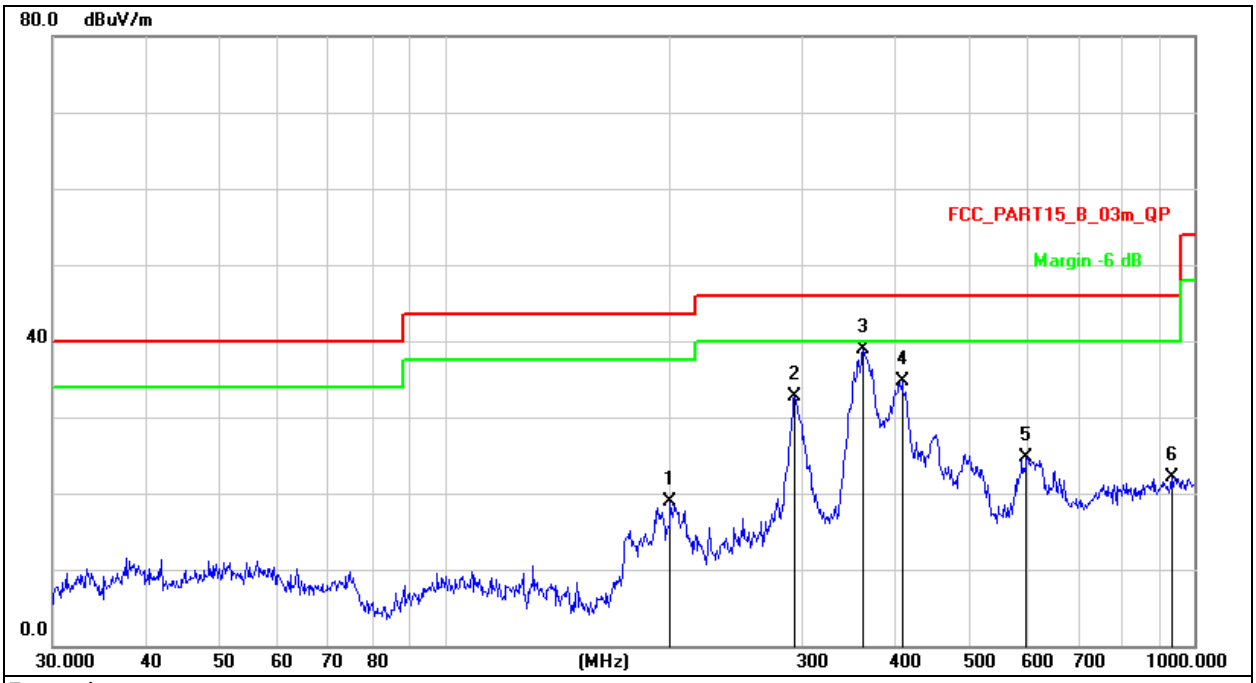

Remark:
1. Factor = Antenna Factor + Cable Loss – Pre-amplifier.
2. Measurement = Reading Level + Correct Factor
3. Over = Measurement - Limit

No.	Mk.	Freq.	Reading Level	Correct Factor	Measure-ment	Limit	Over	
		MHz	dBuV	dB	dBuV/m	dB/m	dB	Detector
1		199.9856	34.66	-15.72	18.94	43.50	-24.56	peak
2		293.0842	46.15	-13.39	32.76	46.00	-13.24	peak
3	*	361.7139	50.14	-11.33	38.81	46.00	-7.19	peak
4		407.5145	45.35	-10.69	34.66	46.00	-11.34	peak
5		597.2234	31.94	-7.21	24.73	46.00	-21.27	peak
6		932.2715	25.11	-3.00	22.11	46.00	-23.89	peak

Temperature:	26 ℃	Relative Humidity:	54%
Pressure:	101KPa	Test Voltage:	DC 3.7V
Test Mode:	Transmitting	Polarization :	Vertical

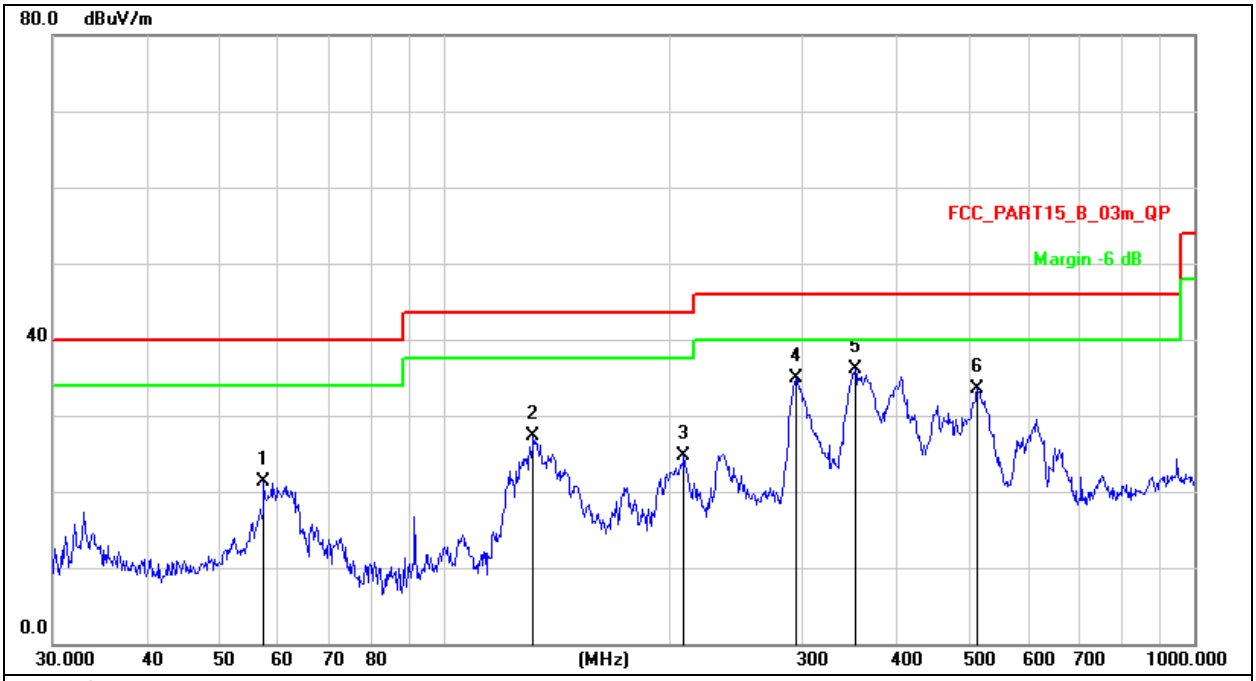

Remark:
1. Factor = Antenna Factor + Cable Loss – Pre-amplifier.
2. Measurement = Reading Level + Correct Factor
3. Over = Measurement - Limit

No.	Mk.	Freq.	Reading Level	Correct Factor	Measure-ment	Limit	Over	
		MHz	dBuV	dB	dBuV/m	dB/m	dB	Detector
1		57.3923	36.30	-14.90	21.40	40.00	-18.60	peak
2		131.2965	45.35	-18.12	27.23	43.50	-16.27	peak
3		208.5803	40.17	-15.47	24.70	43.50	-18.80	peak
4		294.1137	48.35	-13.36	34.99	46.00	-11.01	peak
5	*	352.9433	47.60	-11.44	36.16	46.00	-9.84	peak
6		513.6331	42.59	-9.09	33.50	46.00	-12.50	peak

Between 1GHz – 25GHz

Polar (H/V)	Frequency (MHz)	Reading Level (dBuV/m)	Correct Factor (dB)	Measure-ment (dBuV/m)	Limits (dBuV/m)	Over (dB)	Detector Type
8DPSK Low channel							
V	4804.00	71.35	-19.99	51.36	74.00	-22.64	PK
V	4804.00	61.02	-19.99	41.03	54.00	-12.97	AV
V	7206.00	60.49	-14.22	46.27	74.00	-27.73	PK
V	7206.00	49.71	-14.22	35.49	54.00	-18.51	AV
H	4804.00	69.19	-19.99	49.20	74.00	-24.80	PK
H	4804.00	60.15	-19.99	40.16	54.00	-13.84	AV
H	7206.00	57.89	-14.22	43.67	74.00	-30.33	PK
H	7206.00	50.26	-14.22	36.04	54.00	-17.96	AV
8DPSK Middle channel							
V	4882.00	68.13	-19.84	48.29	74.00	-25.71	PK
V	4882.00	59.82	-19.84	39.98	54.00	-14.02	AV
V	7323.00	60.86	-13.90	46.96	74.00	-27.04	PK
V	7323.00	52.18	-13.90	38.28	54.00	-15.72	AV
H	4882.00	65.73	-19.84	45.89	74.00	-28.11	PK
H	4882.00	56.34	-19.84	36.50	54.00	-17.50	AV
H	7323.00	58.78	-13.90	44.88	74.00	-29.12	PK
H	7323.00	51.29	-13.90	37.39	54.00	-16.61	AV
8DPSK High channel							
V	4960.00	70.94	-19.68	51.26	74.00	-22.74	PK
V	4960.00	60.68	-19.68	41.00	54.00	-13.00	AV
V	7440.00	62.75	-13.57	49.18	74.00	-24.82	PK
V	7440.00	53.16	-13.57	39.59	54.00	-14.41	AV
H	4960.00	69.72	-19.68	50.04	74.00	-23.96	PK
H	4960.00	60.44	-19.68	40.76	54.00	-13.24	AV
H	7440.00	61.20	-13.57	47.63	74.00	-26.37	PK
H	7440.00	53.16	-13.57	39.59	54.00	-14.41	AV

Remark:

1.Emission Level = Meter Reading + Factor, Factor = Antenna Factor + Cable Loss – Pre-amplifier. Over= Emission Level - Limit

2.If peak below the average limit, the average emission was no test.

3. In restricted bands of operation, The spurious emissions below the permissible value more than 20dB

4. The amplitude of spurious emissions which are attenuated by more than 20dB below the permissible value has no need to be reported.

5.All the Modulation are test, the worst mode is 8DPSK, the data recording in the report.

8. Radiated Band Emission Measurement And Restricted Bands Of Operation

8.1 Block Diagram Of Test Setup

Radiated Emission Test-Up Frequency Above 1GHz

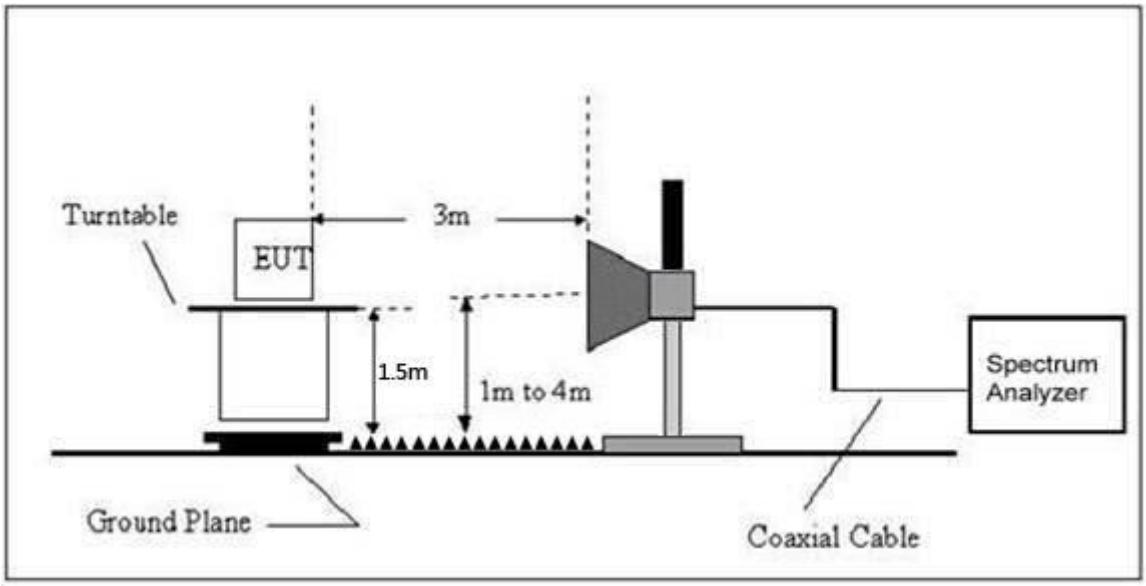

8.2 Limit

FCC Part15 C Section 15.209 and 15.205

(a) Except as shown in paragraph (d) of this section, only spurious emissions are permitted in any of the frequency bands listed below:

MHz	MHz	MHz	GHz
0.090-0.110	16.42-16.423	399.9-410	4.5-5.15
[1]0.495-0.505	16.69475-16.69525	608-614	5.35-5.46
2.1735-2.1905	16.80425-16.80475	960-1240	7.25-7.75
4.125-4.128	25.5-25.67	1300-1427	8.025-8.5
4.17725-4.17775	37.5-38.25	1435-1626.5	9.0-9.2
4.20725-4.20775	73-74.6	1645.5-1646.5	9.3-9.5
6.215-6.218	74.8-75.2	1660-1710	10.6-12.7
6.26775-6.26825	108-121.94	1718.8-1722.2	13.25-13.4
6.31175-6.31225	123-138	2200-2300	14.47-14.5
8.291-8.294	149.9-150.05	2310-2390	15.35-16.2
8.362-8.366	156.52475-156.52525	2483.5-2500	17.7-21.4
8.37625-8.38675	156.7-156.9	2690-2900	22.01-23.12
8.41425-8.41475	162.0125-167.17	3260-3267	23.6-24.0
12.29-12.293	167.72-173.2	3332-3339	31.2-31.8
12.51975-12.52025	240-285	3345.8-3358	36.43-36.5
12.57675-12.57725	322-335.4	3600-4400	([2])
13.36-13.41			

Limits Of Radiated Emission Measurement (Above 1000MHz)

Frequency (MHz)	Limit (dBuV/m) (at 3M)	
	Peak	Average
Above 1000	74	54

Notes:
(1)The limit for radiated test was performed according to FCC PART 15C.
(2)The tighter limit applies at the band edges.
(3)Emission level (dBuV/m)=20log Emission level (uV/m).

8.3 Test procedure

Receiver Parameter	Setting
Attenuation	Auto
Start Frequency	2300MHz
Stop Frequency	2520
RB / VB (Emission In Restricted Band)	1 MHz / 1 MHz for Peak, 1 MHz / 10Hz for Average

Above 1GHz test procedure as below:
a.The EUT was placed on the top of a rotating table 1.5 meters above the ground at a 3 meter camber. The table was rotated 360 degrees to determine the position of the highest radiation.

b.The EUT was set 3 meters away from the interference-receiving antenna, which was mounted on the top of a variable-height antenna tower.

c.The antenna height is varied from one meter to four meters above the ground to determine the maximum value of the field strength. Both horizontal and vertical polarizations of the antenna are set to make the measurement.

d.For each suspected emission, the EUT was arranged to its worst case and then the antenna was tuned to heights from 1 meter to 4 meters and the rota table was turned from 0 degrees to 360 degrees to find the maximum reading.

e.The test-receiver system was set to Peak Detect Function and Specified Bandwidth with Maximum Hold Mode.

f. If the emission level of the EUT in peak mode was 10dB lower than the limit specified, then testing could be stopped and the peak values of the EUT would be reported. Otherwise the emissions that did not have 10dB margin would be re-tested one by one using peak, quasi-peak or average method as specified and then reported in a data sheet.

g. Test the EUT in the lowest channel, the Highest channel.

Note:
Both horizontal and vertical antenna polarities were tested and performed pretest to three orthogonal axis. The worst case emissions were reported.

8.4 EUT operating Conditions

The EUT was configured for testing in a typical fashion (as a customer would normally use it). The EUT has been programmed to continuously transmit during test. This operating condition was tested and used to collect the included data.

8.5 Test Result

Test mode	Polar (H/V)	Frequency (MHz)	Reading Level (dBuV/m)	Correct Factor (dB)	Measure-ment (dBuV/m)	Limits (dBuV/m)		Result
					PK	PK	AV	
GFSK	Low Channel 2402MHz							
	H	2390.00	73.80	-25.43	48.37	74.00	54.00	PASS
	H	2400.00	76.09	-25.40	50.69	74.00	54.00	PASS
	V	2390.00	74.44	-25.43	49.01	74.00	54.00	PASS
	V	2400.00	75.78	-25.40	50.38	74.00	54.00	PASS
	High Channel 2480MHz							
	H	2483.50	73.29	-25.15	48.14	74.00	54.00	PASS
	H	2500.00	70.59	-25.10	45.49	74.00	54.00	PASS
	V	2483.50	72.88	-25.15	47.73	74.00	54.00	PASS
	V	2500.00	69.88	-25.10	44.78	74.00	54.00	PASS
π/4DQPSK	Low Channel 2402MHz							
	H	2390.00	72.11	-25.43	46.68	74.00	54.00	PASS
	H	2400.00	74.85	-25.40	49.45	74.00	54.00	PASS
	V	2390.00	72.03	-25.43	46.60	74.00	54.00	PASS
	V	2400.00	73.16	-25.40	47.76	74.00	54.00	PASS
	High Channel 2480MHz							
	H	2483.50	72.51	-25.15	47.36	74.00	54.00	PASS
	H	2500.00	67.32	-25.10	42.22	74.00	54.00	PASS
	V	2483.50	70.34	-25.15	45.19	74.00	54.00	PASS
	V	2500.00	65.70	-25.10	40.60	74.00	54.00	PASS
8DPSK	Low Channel 2402MHz							
	H	2390.00	72.06	-25.43	46.63	74.00	54.00	PASS
	H	2400.00	74.62	-25.40	49.22	74.00	54.00	PASS
	V	2390.00	71.21	-25.43	45.78	74.00	54.00	PASS
	V	2400.00	72.91	-25.40	47.51	74.00	54.00	PASS
	High Channel 2480MHz							
	H	2483.50	70.79	-25.15	45.64	74.00	54.00	PASS
	H	2500.00	67.20	-25.10	42.10	74.00	54.00	PASS
	V	2483.50	71.00	-25.15	45.85	74.00	54.00	PASS
	V	2500.00	66.93	-25.10	41.83	74.00	54.00	PASS

Remark:

1. Emission Level = Meter Reading + Factor, Factor = Antenna Factor + Cable Loss – Pre-amplifier. Over= Emission Level - Limit

2. If the PK measured levels comply with average limit, then the average level were deemed to comply with average limit.

3 In restricted bands of operation, The spurious emissions below the permissible value more than 20dB

4. The amplitude of spurious emissions which are attenuated by more than 20dB below the permissible value has no need to be reported.

9. Spurious RF Conducted Emissions

9.1 Block Diagram Of Test Setup

9.2 Limit

Regulation 15.247 (d),In any 100 kHz bandwidth outside the frequency band in which the spread spectrum or digitally modulated intentional radiator is operating, the radio frequency power that is produced by the intentional radiator shall be at least 20 dB below that in the 100 kHz bandwidth within the band that contains the highest level of the desired power, based on either an RF conducted or a radiated measurement, provided the transmitter demonstrates compliance with the peak conducted power limits. If the transmitter complies with the conducted power limits based on the use of RMS averaging over a time interval, as permitted under paragraph (b)(3) of this section, the attenuation required under this paragraph shall be 30 dB instead of 20 dB. Attenuation below the general limits specified in §15.209(a) is not required. In addition, radiated emissions which fall in the restricted bands, as defined in §15.205(a), must also comply with the radiated emission limits specified in §15.209(a) (see §15.205(c))

9.3 Test procedure

1. Remove the antenna from the EUT and then connect a low RF cable from the antenna port to the spectrum;
2. Set the spectrum analyzer:
RBW = 100kHz, VBW = 300kHz, Sweep = auto
Detector function = peak, Trace = max hold

9.4 Test Result

Test Graphs

Tx. Spurious NVNT 1-DH1 2402MHz Ref

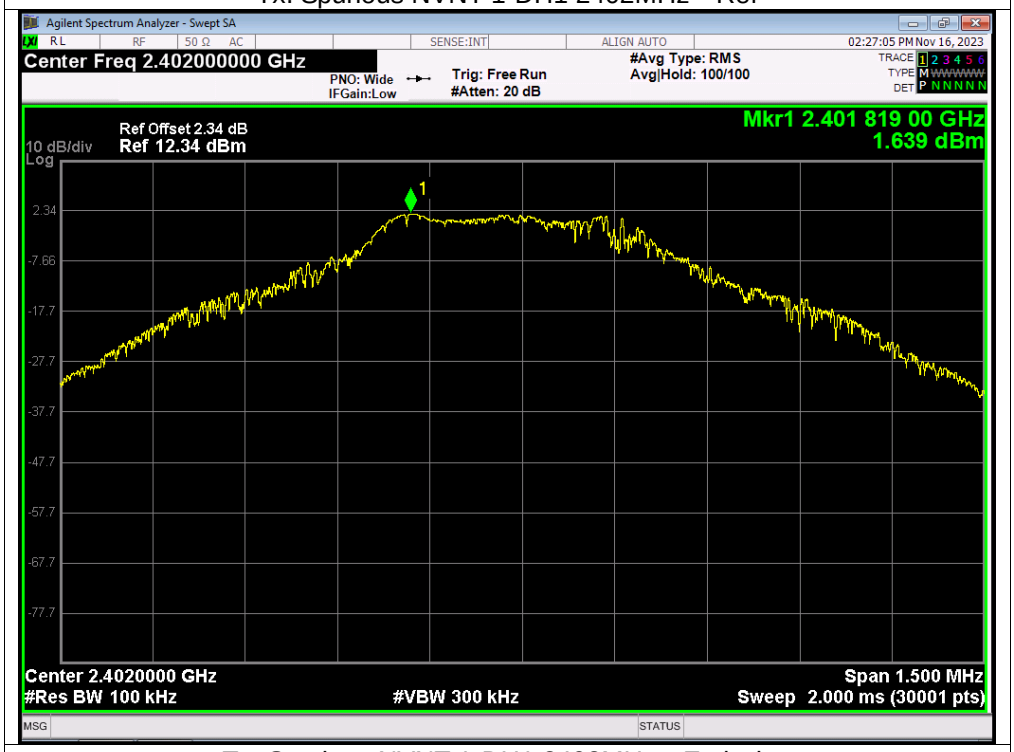

Tx. Spurious NVNT 1-DH1 2402MHz Emission

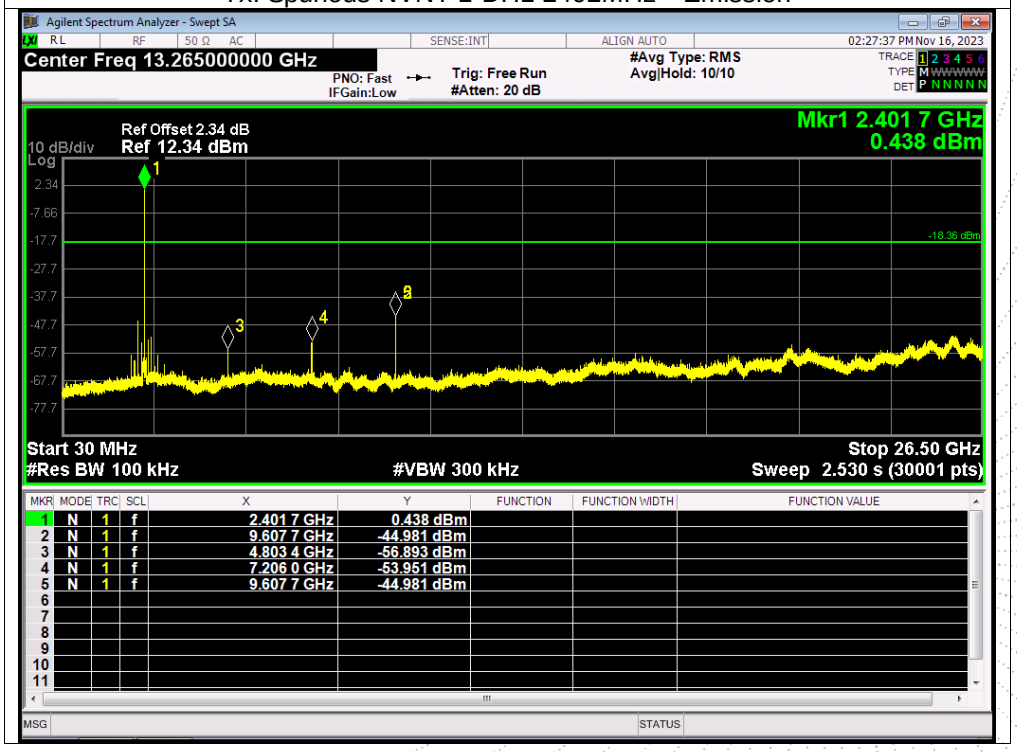

Tx. Spurious NVNT 1-DH1 2441MHz Ref

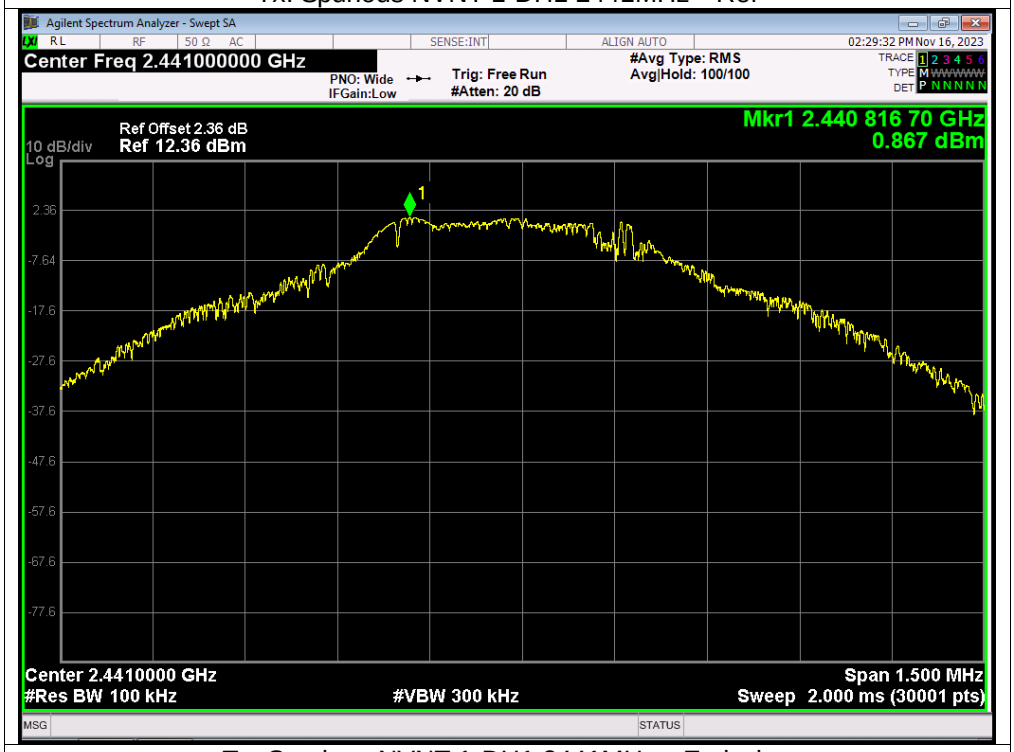

Tx. Spurious NVNT 1-DH1 2441MHz Emission

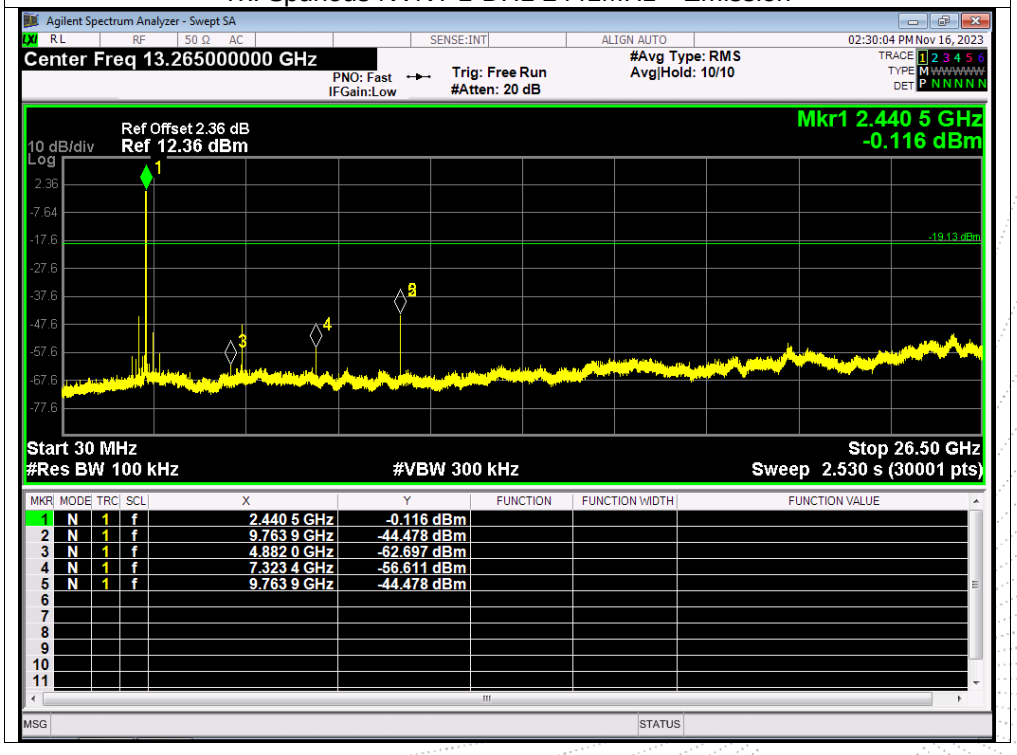

Tx. Spurious NVNT 1-DH1 2480MHz Ref

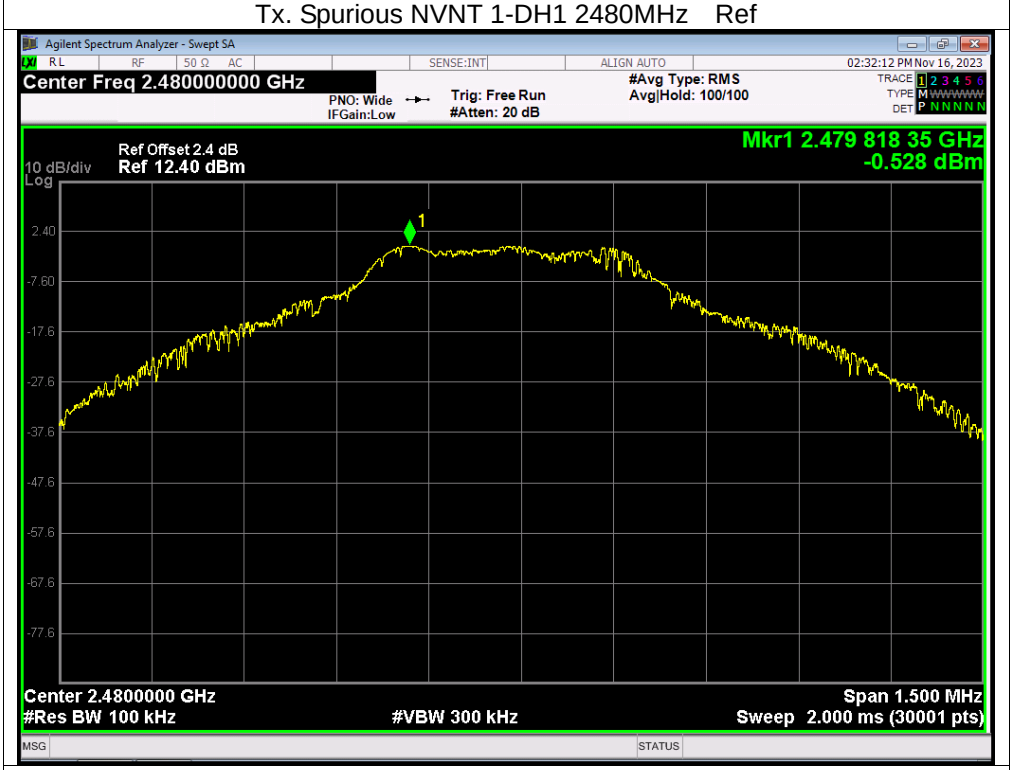

Tx. Spurious NVNT 1-DH1 2480MHz Emission

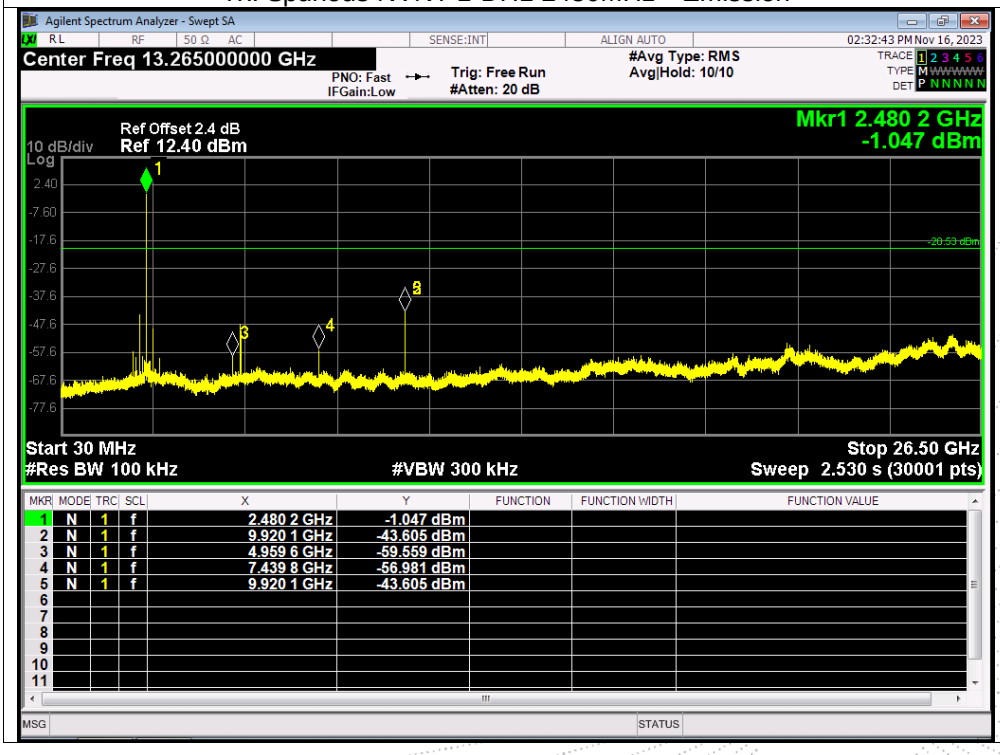

Tx. Spurious NVNT 2-DH1 2402MHz Ref

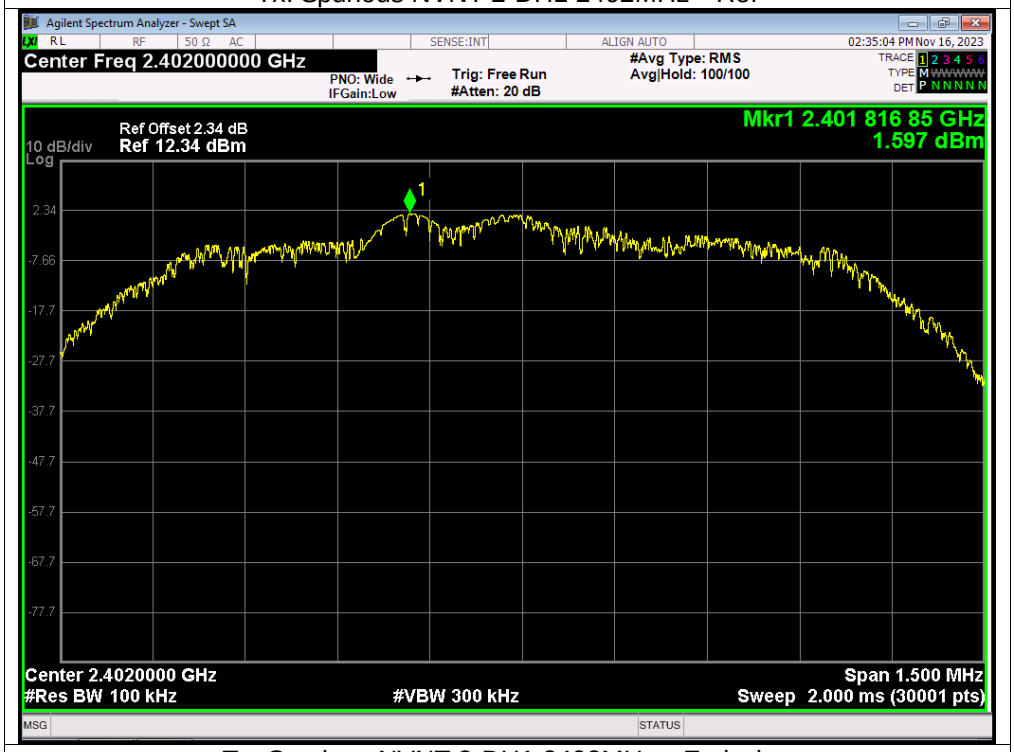
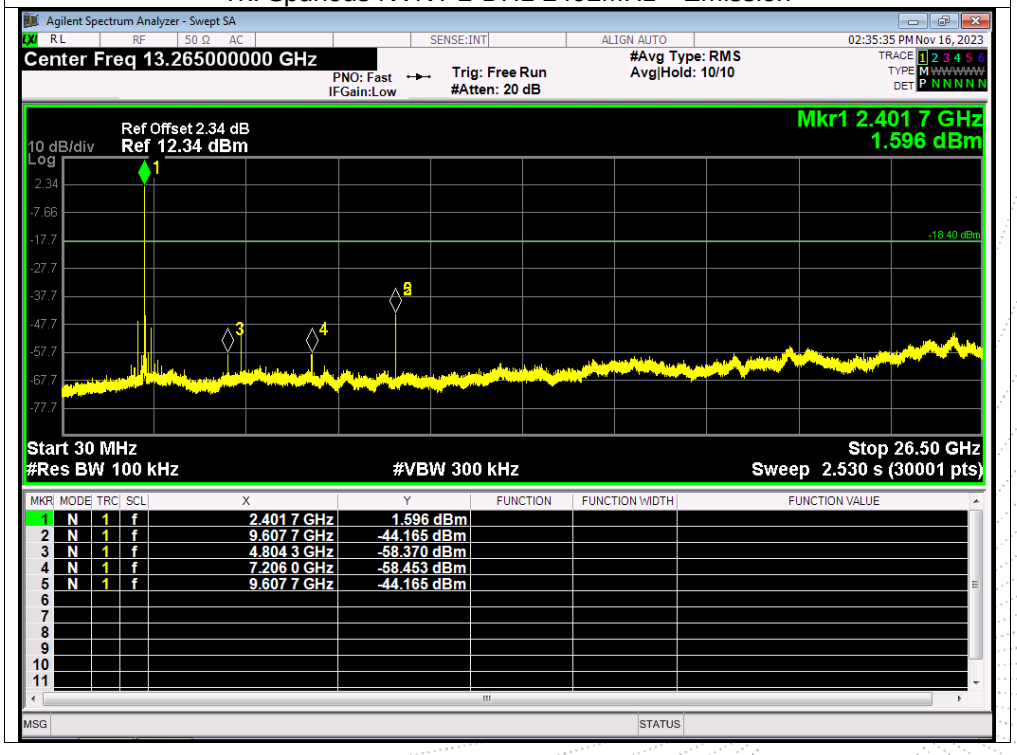
Tx. Spurious NVNT 2-DH1 2402MHz Emission