TEST REPORT

Report No.:	BCTC2504668210-4E
Applicant:	Ugreen Group Limited
Product Name:	BE6500 Wi-Fi 7 Bluetooth Wireless PCIe Adapter
Test Model:	CM822
Tested Date:	2025-04-21 to 2025-05-14
Issued Date:	2025-05-15

Shenzhen BCTC Testing Co., Ltd.

FCC ID: 2AQI5-CM822

Product Name:	BE6500 Wi-Fi 7 Bluetooth Wireless PCIe Adapter
Trademark:	UGREEN
Model/Type reference:	CM822
Prepared For:	Ugreen Group Limited
Address:	Ugreen Building, Longcheng Industrial Park, Longguanxi Road, Longhua, ShenZhen, China
Manufacturer:	Ugreen Group Limited
Address:	Ugreen Building, Longcheng Industrial Park, Longguanxi Road, Longhua, ShenZhen, China
Factory:	Huizhou MTN Weiye Technology Development Co., Ltd.
Address:	No. 1 Factory Building, No. 2 Factory Building, No. 1, Huaxing Avenue, ChenjiangStreet, Zhongkai High tech Zone, Huizhou City, Guangdong Province, China
Prepared By:	Shenzhen BCTC Testing Co., Ltd.
Address:	1-2/F., Building B, Pengzhou Industrial Park, No.158, Fuyuan 1st Road, Zhancheng, Fuhai Subdistrict, Bao'an District, Shenzhen, Guangdong, China
Sample Received Date:	2025-04-21
Sample tested Date:	2025-04-21 to 2025-05-14
Issue Date:	2025-05-15
Report No.:	BCTC2504668210-4E
Test Standards:	CFR 47 FCC Part 15.407 ANSI C63.10:2013
Test Results:	PASS

Tested by:

Brave Zeng/ Project Handler

Approved by:

Zero Zhou/Reviewer

The test report is effective only with both signature and specialized stamp. This result(s) shown in this report refer only to the sample(s) tested. Without written approval of Shenzhen BCTC Testing Co., Ltd, this report can't be reproduced except in full. The tested sample(s) and the sample information are provided by the client.

Table Of Content

Test Report Declaration Page
1. Version 4
2. Test Summary 5
3. Measurement Uncertainty 6
4. Product Information And Test Setup 7
4.1 Product Information 7
4.2 Test Setup Configuration 8
4.3 Support Equipment 8
4.4 Channel List 9
4.5 Test Mode 10
4.6 Table Of Parameters Of Text Software Setting 10
5. Test Facility And Test Instrument Used 11
5.1 Test Facility 11
5.2 Test Instrument Used 11
6. Conducted Emissions 13
6.1 Block Diagram Of Test Setup 13
6.2 Limit 13
6.3 Test Procedure 13
6.4 EUT Operating Conditions 13
6.5 Test Result 14
7. Radiated Emissions 16
7.1 Block Diagram Of Test Setup 16
7.2 Limit 17
7.3 Test Procedure 18
7.4 EUT Operating Conditions 19
7.5 Test Result 19
8. Antenna Requirement 70
8.1 Limit 70
8.2 Test Result 70
9. EUT Photographs 71
10. EUT Test Setup Photographs 72

(Note: N/A Means Not Applicable)

1. Version

Report No.	Issue Date	Description	Approved
BCTC2504668210-4E	2025-05-15	Original	Valid

2. Test Summary

The Product has been tested according to the following specifications:

No.	Test Parameter	Clause No.	Results
1	Spurious Radiated Emissions	15.209(a) 15.407 (b)	PASS
2	Conducted Emission	15.207	PASS
3	Band Edge	15.407 b	PASS
4	Spurious Emissions at Antenna Terminals	15.407 b	PASS
5	Antenna Requirement	15.203	PASS

Note: The device shall automatically discontinue transmission in case of either absence of information to transmit or operational failure.

Note: According to the following changes in the product, change the antenna, Therefore, conducted emission and radiation emission, radiation stray and radiation sideband tests were only carried out in this report on the original report (RFBARR-WTW-P23040352-1).

New

3. Measurement Uncertainty

Where relevant, the following measurement uncertainty levels have been estimated for tests performed on the Product as specified in CISPR 16-4-2. This uncertainty represents an expanded uncertainty expressed at approximately the 95% confidence level using a coverage factor of k=2.

No.	Item	Uncertainty
1	3m chamber Radiated spurious emission(9kHz-30MHz)	U=3.7dB
2	3m chamber Radiated spurious emission(30MHz-1GHz)	U=4.3dB
3	3m chamber Radiated spurious emission(1GHz-18GHz)	U=4.5dB
4	3m chamber Radiated spurious emission(18GHz-40GHz)	U=3.34dB
5	Conducted Emission(150kHz-30MHz)	U=3.20dB
6	Conducted Adjacent channel power	U=1.38dB
7	Conducted output power uncertainty Above 1G	U=1.576dB
8	Conducted output power uncertainty below 1G	U=1.28dB
9	humidity uncertainty	U=5.3%
10	Temperature uncertainty	U=0.59℃

4. Product Information And Test Setup

4.1 Product Information

Model/Type reference:	CM822
P/N code Differences:	All the P/N code and test models are the same circuit and RF module, except for the sales platform.
Hardware Version:	N/A
Software Version:	N/A
IEEE 802.11 WLAN Mode Supported:	802.11a/n/ac/ax/be(20MHz channel bandwidth) 802.11n/ac/ax/be(40MHz channel bandwidth) 802.11ac/ax/be(80MHz channel bandwidth)
Operation Frequency:	5.18 GHz- 5.24 GHz 5.24 GHz- 5.32 GHz 5.5 GHz~ 5.7 GHz 5.745 GHz~ 5.825 GHz
Data Rate:	802.11a: up to 54 Mbps 802.11n: up to 300 Mbps 802.11ac: up to 1733.3 Mbps 802.11ax: up to 2401.9 Mbps 802.11be: up to 2882.4 Mbps
Type of Modulation:	64QAM,16QAM,QPSK, BPSK for OFDM 256QAM for OFDM in 11ac mode 1024QAM for OFDMA in 11ax mode 4096QAM for OFDMA in 11be mode
Resource Unit (RU):	Single RU:26-tone,52-tone,106-tone,242-tone,484-tone, 996-tone,2*996-tone Multi-RU(Small RU):52-tone + 26-tone,106-tone + 26-tone Multi-RU (Large RU): 484-tone + 242-tone
Antenna installation:	External antenna
Antenna Gain:	3.16 dBi Remark: ☒ The antenna gain of the product comes from the antenna report provided by the customer, and the test data is affected by the customer information. ☐ The antenna gain of the product is provided by the customer, and the test data is affected by the customer information.
Ratings:	DC 3.3V

Remark:
- P/N code in the below table, for marketing purpose, will be marked on the marking plate.

55204	55204EU	55204UK	55204US	55204JP	55204CN	55204KC	55204A
55204B	55204C	55204P	55204X	55204U	KC-55204		
65785	65785EU	65785UK	65785US	65785JP	65785CN	65785KC	65785A
65785B	65785C	65785P	65785X	65785U	KC-65785		

4.2 Test Setup Configuration

See test photographs attached in *EUT TEST SETUP PHOTOGRAPHS* for the actual connections between Product and support equipment.

4.3 Support Equipment

Item	Equipment	Mfr/Brand	Model/Type No.	Series No.	Note
E-1	BE6500 Wi-Fi 7 Bluetooth Wireless PCIe Adapter	UGREEN	CM822	N/A	EUT
E-2	HDMI cable	UGREEN	/	---	Auxiliary
E-3	Display	AOC	U27V5C	---	Auxiliary
E-4	Host	Assemble the computer	D9A	---	Auxiliary
E-5	Keyboard	Logitech	M-U0026	---	Auxiliary
E-6	Mouse	Logitech	YU0036	---	Auxiliary
E-7	Router	XiaoMi	R4A	---	Auxiliary

Item	Shielded Type	Ferrite Core	Length	Note
C-1	N/A	N/A	0M	DC cable unshielded

Notes:
1. All the equipment/cables were placed in the worst-case configuration to maximize the emission during the test.
2. Grounding was established in accordance with the manufacturer's requirements and conditions for the intended use.

4.4 Channel List

(U-NII-1) 5180MHz-5240MHz				
Bandwidth	**Channel**	**Frequency (MHz)**	**Channel**	**Frequency**
20MHz	36	5180	40	5200
	44	5220	48	5240
40MHz	38	5190	46	5230
80MHz	42	5210		
(U-NII-2A) 5260MHz-5320MHz				
Bandwidth	**Channel**	**Frequency (MHz)**	**Channel**	**Frequency**
20MHz	52	5260	56	5280
	60	5300	64	5320
40MHz	54	5270	62	5310
80MHz	58	5290		
(U-NII-2C) 5500MHz-5700MHz				
Bandwidth	**Channel**	**Frequency (MHz)**	**Channel**	**Frequency**
20MHz	100	5500	105	5520
	108	5540	112	5560
	116	5580	132	5660
	136	5680	140	5700
40MHz	102	5510	110	5550
	134	5670		
80MHz	106	5530		
(U-NII-3) 5745MHz-5825MHz				
Bandwidth	**Channel**	**Frequency (MHz)**	**Channel**	**Frequency**
20MHz	149	5745	153	5765
	157	5785	161	5805
	165	5825		
40MHz	151	5775	159	5795
80MHz	155	5775		

4.5 Test Mode

To investigate the maximum EMI emission characteristics generates from EUT, the test system was pre-scanning tested base on the consideration of following EUT operation mode or test configuration mode which possible have effect on EMI emission level. Each of these EUT operation mode(s) or test configuration mode(s) mentioned above was evaluated respectively.

Pretest Mode	Description
Mode 1	802.11a / n/ ac 20/ ax 20/be 20 CH36/ CH40/ CH 48 802.11a / n/ ac 20/ax 20/ be 20 CH52/ CH56/ CH 64 802.11a / n/ ac 20/ax 20/ be 20 CH100/ CH116/ CH 140 802.11a / n/ ac 20/ax 20/ be 20 CH149/ CH157/ CH 165
Mode 2	802.11n/ ac40/ax 40/be 40 CH38/ CH 46 802.11n/ ac40/ax 40/be 40 CH54/ CH 62 802.11n/ ac40/ax 40/be 40 CH102/ CH 110/CH134 802.11n/ ac40/ax 40/be 40 CH 151 / CH 159
Mode 3	802.11 ac80/ax 80/be 80 CH 42/ CH 58/ CH 106/ CH 155
Mode 4	Link Mode (Conducted emission & Radiated emission)

Note:

(1) The measurements are performed at all Bit Rate of Transmitter, the worst data was reported.

4.6 Table Of Parameters Of Text Software Setting

During testing channel & power controlling software provided by the customer was used to control the operating channel as well as the output power level. The RF output power selection is for the setting of RF output power expected by the customer and is going to be fixed on the firmware of the final end product power parameters

Test software Version	CMD		
Parameters	DEF	DEF	DEF

5. Test Facility And Test Instrument Used

5.1 Test Facility

All measurement facilities used to collect the measurement data are located at Shenzhen BCTC Testing Co., Ltd. Address: 1-2/F., Building B, Pengzhou Industrial Park, No.158, Fuyuan 1st Road, Zhancheng, Fuhai Subdistrict, Bao'an District, Shenzhen, Guangdong, China. The site and apparatus are constructed in conformance with the requirements of ANSI C63.4 and CISPR 16-1-1 other equivalent standards.
FCC Test Firm Registration Number: 712850
A2LA certificate registration number is: CN1212
ISED Registered No.: 23583
ISED CAB identifier: CN0017

5.2 Test Instrument Used

Conducted Emissions Test					
Equipment	**Manufacturer**	**Model#**	**Serial#**	**Last Cal.**	**Next Cal.**
Receiver	R&S	ESR	102075	May 16, 2024	May 15, 2025
LISN	R&S	ENV216	101375	May 16, 2024	May 15, 2025
Software	Frad	EZ-EMC	EMC-CON 3A1	\	\
Pulse limiter	Schwarzbeck	VTSD9561-F	01323	May 16, 2024	May 15, 2025

RF Conducted Test					
Equipment	**Manufacturer**	**Model#**	**Serial#**	**Last Cal.**	**Next Cal.**
Power metter	Keysight	E4419	\	May 16, 2024	May 15, 2025
Power Sensor (AV)	Keysight	E9300A	\	May 16, 2024	May 15, 2025
Signal Analyzer20kHz-26.5GHz	Keysight	N9020A	MY49100060	May 16, 2024	May 15, 2025
Spectrum Analyzer9kHz-40GHz	R&S	FSP40	100363	May 16, 2024	May 15, 2025
Radio frequency control box	MAIWEI	MW100-RFCB	\	\	\
Software	MAIWEI	MTS 8310	\	\	\

Radiated Emissions Test (966 Chamber02)					
Equipment	**Manufacturer**	**Model#**	**Serial#**	**Last Cal.**	**Next Cal.**
966 chamber	SKET	966 Room	966	Oct. 31. 2024	Oct. 30. 2027
Receiver	R&S	ESR	102075	May 16, 2024	May 15, 2025
Receiver	R&S	ESRI7	100010	Oct. 31. 2024	Oct. 30. 2025
Amplifier	SKET	LNPA-30M01 G-30	SK2021082004	Oct. 31. 2024	Oct. 30. 2025
TRILOG Broadband Antenna	Schwarzbeck	VULB9168	1323	Feb. 28, 2025	Feb. 27, 2026
Loop Antenna(9KHz -30MHz)	Schwarzbeck	FMZB1519B	00014	May 21, 2024	May 20, 2025
Amplifier	SKET	LAPA_01G18 G-45dB	SK202104090 1	May 16, 2024	May 15, 2025
Horn Antenna	Schwarzbeck	BBHA9120D	1541	May 21, 2024	May 20, 2025
Amplifier(18G Hz-40GHz)	MITEQ	TTA1840-35-HG	2034381	May 16, 2024	May 15, 2025
Horn Antenna(18G Hz-40GHz)	Schwarzbeck	BBHA9170	00822	May 21, 2024	May 20, 2025
Spectrum Analyzer9kHz-40GHz	R&S	FSP40	100363	May 16, 2024	May 15, 2025
Software	Frad	EZ-EMC	FA-03A2 RE	\	\

6. Conducted Emissions

6.1 Block Diagram Of Test Setup

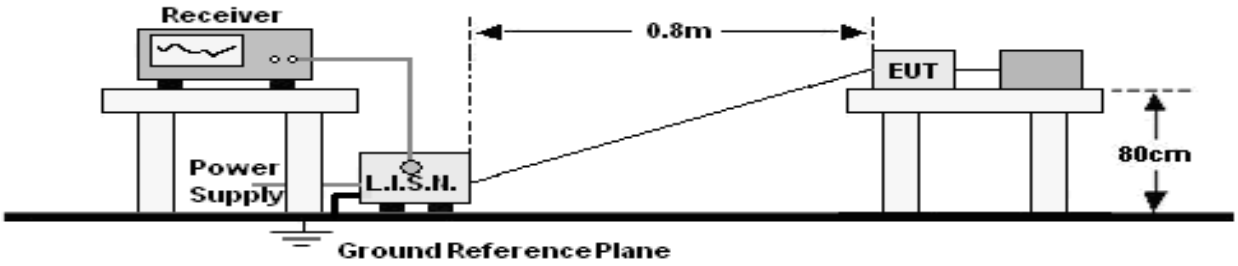

6.2 Limit

Frequency (MHz)	Limit (dBuV)	
	Quas-peak	Average
0.15 -0.5	66 - 56 *	56 - 46 *
0.50 -5.0	56.00	46.00
5.0 -30.0	60.00	50.00
Notes: 1. *Decreasing linearly with logarithm of frequency. 2. The lower limit shall apply at the transition frequencies.		

6.3 Test Procedure

Receiver Parameters	Setting
Attenuation	10 dB
Start Frequency	0.15 MHz
Stop Frequency	30 MHz
IF Bandwidth	9 kHz

a. The Product was placed on a nonconductive table 0.8 m above the horizontal ground reference plane, and 0.4 m from the vertical ground reference plane, and connected to the main through Line Impedance Stability Network (L.I.S.N).
b. The RBW of the receiver was set at 9 kHz in 150 kHz ~ 30MHz with Peak and AVG detector in Max Hold mode. Run the receiver's pre-scan to record the maximum disturbance generated from Product in all power lines in the full band.
c. For each frequency whose maximum record was higher or close to limit, measure its QP and AVG values and record.

6.4 EUT Operating Conditions

The EUT was configured for testing in a typical fashion (as a customer would normally use it). The EUT has been programmed to continuously transmit during test. This operating condition was tested and used to collect the included data.

6.5 Test Result

Temperature:	26 ℃	Relative Humidity:	54%
Pressure:	101KPa	Phase :	L
Test Mode:	Mode 4	Test Voltage :	DC 3.3V

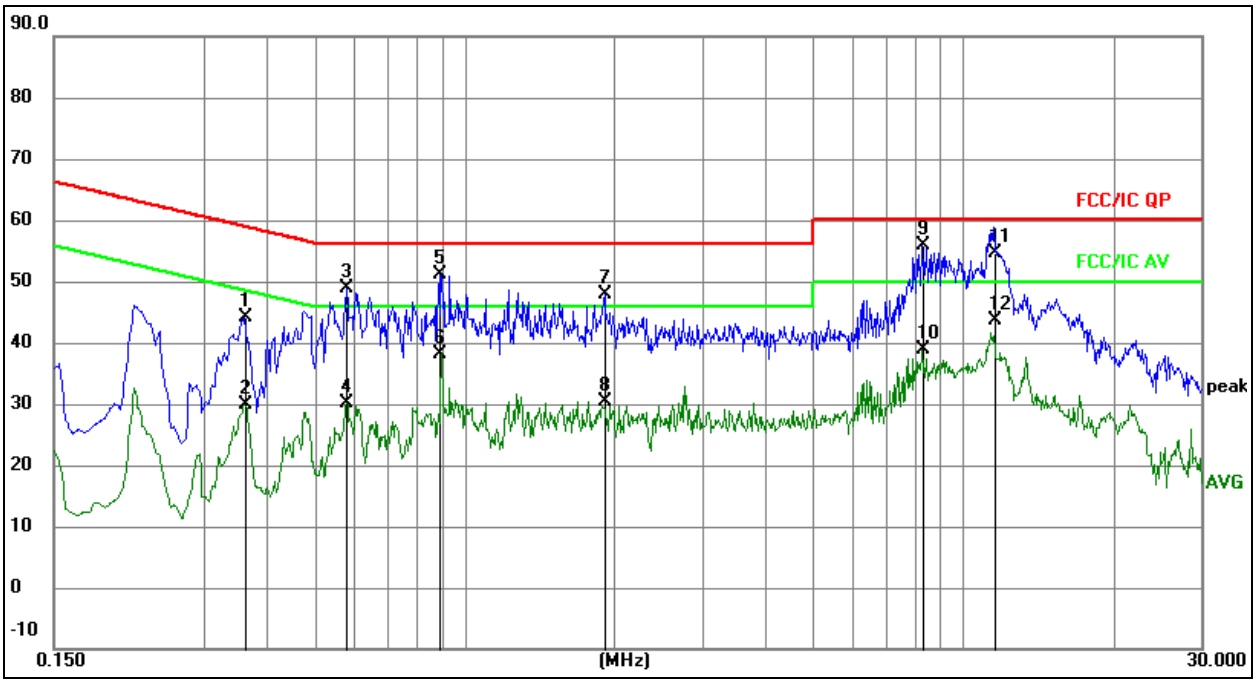

Remark:
1. All readings are Quasi-Peak and Average values.
2. Factor = Insertion Loss + Cable Loss.
3. Measurement=Reading Level+ Correct Factor
4. Over=Measurement-Limit

No.	Mk.	Freq.	Reading Level	Correct Factor	Measure-ment	Limit	Over	
		MHz		dB	dBuV	dBuV	dB	Detector
1		0.3615	24.07	20.08	44.15	58.69	-14.54	QP
2		0.3615	9.84	20.08	29.92	48.69	-18.77	AVG
3		0.5792	28.79	20.08	48.87	56.00	-7.13	QP
4		0.5792	10.08	20.08	30.16	46.00	-15.84	AVG
5		0.8944	31.04	20.09	51.13	56.00	-4.87	QP
6		0.8944	18.12	20.09	38.21	46.00	-7.79	AVG
7		1.9080	27.85	20.10	47.95	56.00	-8.05	QP
8		1.9080	10.22	20.10	30.32	46.00	-15.68	AVG
9	*	8.2789	35.75	20.16	55.91	60.00	-4.09	QP
10		8.2789	18.63	20.16	38.79	50.00	-11.21	AVG
11		11.5190	34.36	20.21	54.57	60.00	-5.43	QP
12		11.5190	23.39	20.21	43.60	50.00	-6.40	AVG

Temperature:	26 ℃	Relative Humidity:	54%
Pressure:	101KPa	Phase :	N
Test Mode:	Mode 4	Test Voltage :	DC 3.3V

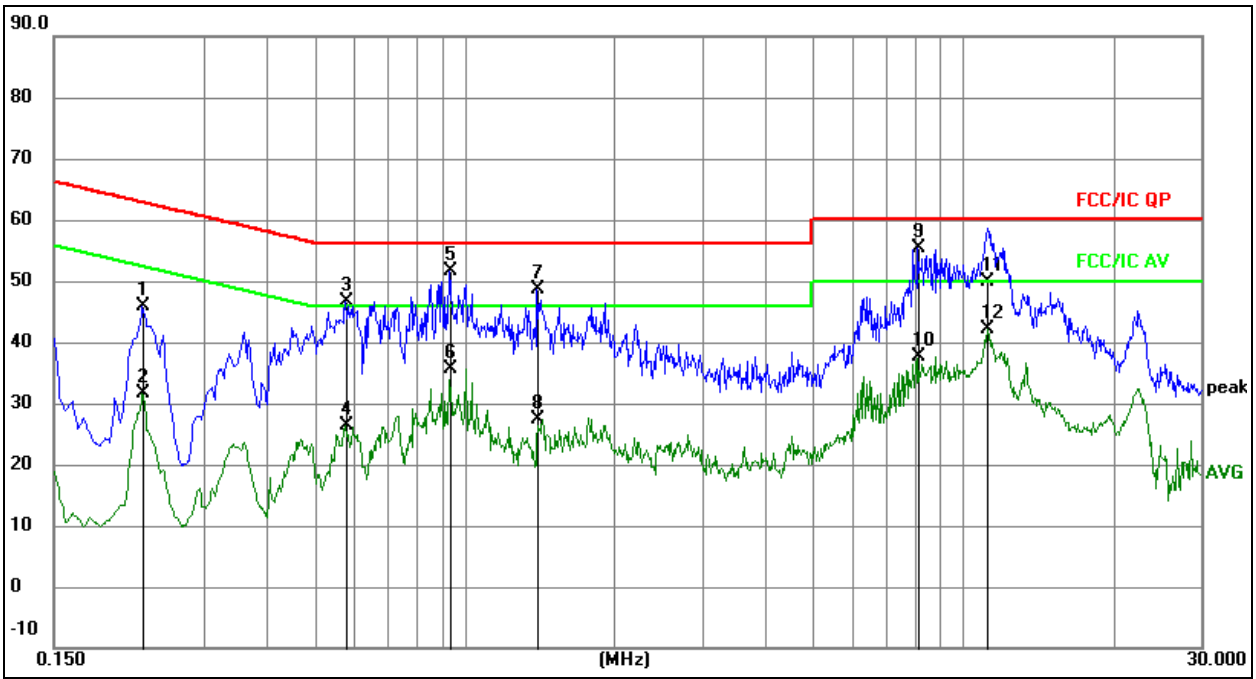

Remark:
1. All readings are Quasi-Peak and Average values.
2. Factor = Insertion Loss + Cable Loss.
3. Measurement=Reading Level+ Correct Factor
4. Over=Measurement-Limit

No.	Mk.	Freq.	Reading Level	Correct Factor	Measure-ment	Limit	Over	
		MHz		dB	dBuV	dBuV	dB	Detector
1		0.2265	25.87	20.07	45.94	62.58	-16.64	QP
2		0.2265	11.54	20.07	31.61	52.58	-20.97	AVG
3		0.5775	26.43	20.08	46.51	56.00	-9.49	QP
4		0.5775	6.37	20.08	26.45	46.00	-19.55	AVG
5	*	0.9375	31.43	20.09	51.52	56.00	-4.48	QP
6		0.9375	15.58	20.09	35.67	46.00	-10.33	AVG
7		1.4010	28.60	20.09	48.69	56.00	-7.31	QP
8		1.4010	7.34	20.09	27.43	46.00	-18.57	AVG
9		8.1420	35.22	20.16	55.38	60.00	-4.62	QP
10		8.1420	17.45	20.16	37.61	50.00	-12.39	AVG
11		11.1950	29.60	20.20	49.80	60.00	-10.20	QP
12		11.1950	21.98	20.20	42.18	50.00	-7.82	AVG

7. Radiated Emissions

7.1 Block Diagram Of Test Setup

（A）Radiated Emission Test-Up Frequency Below 30MHz

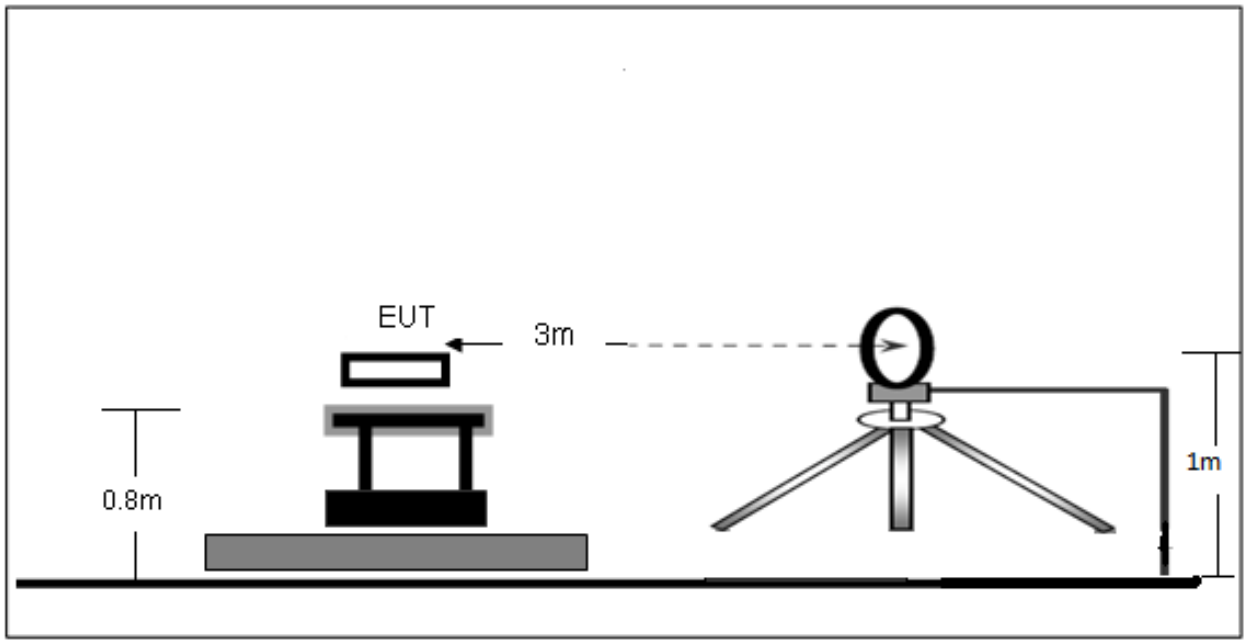

（B）Radiated Emission Test-Up Frequency 30MHz~1GHz

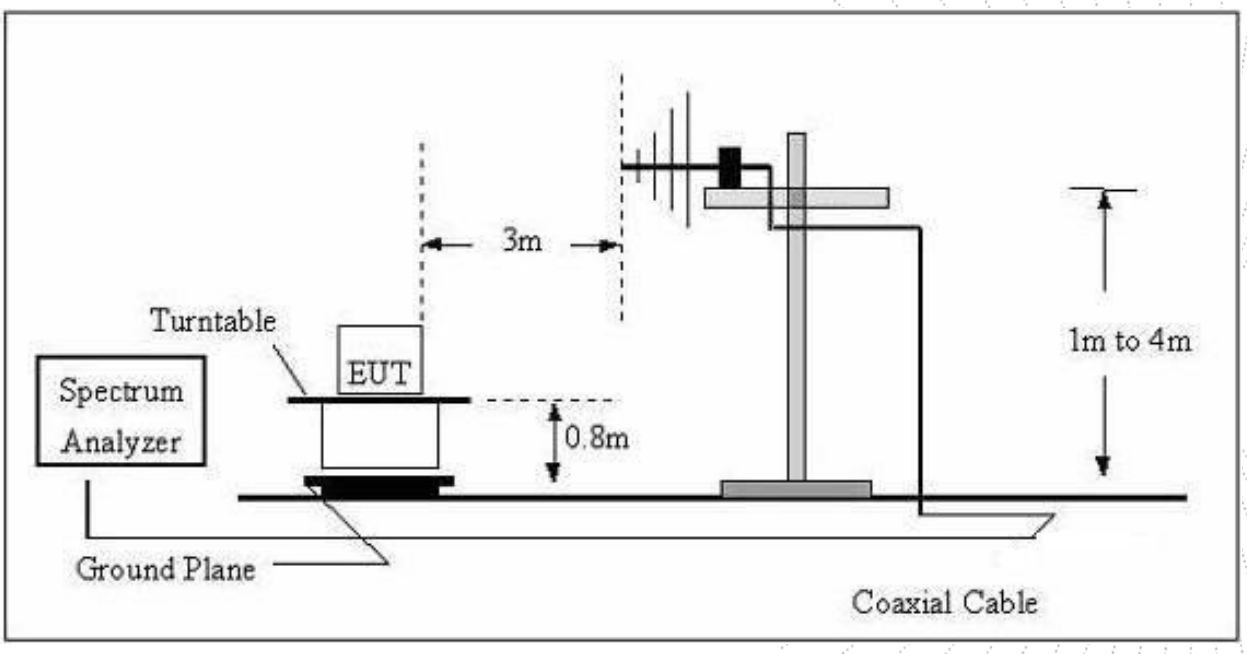

（C）Radiated Emission Test-Up Frequency Above 1GHz

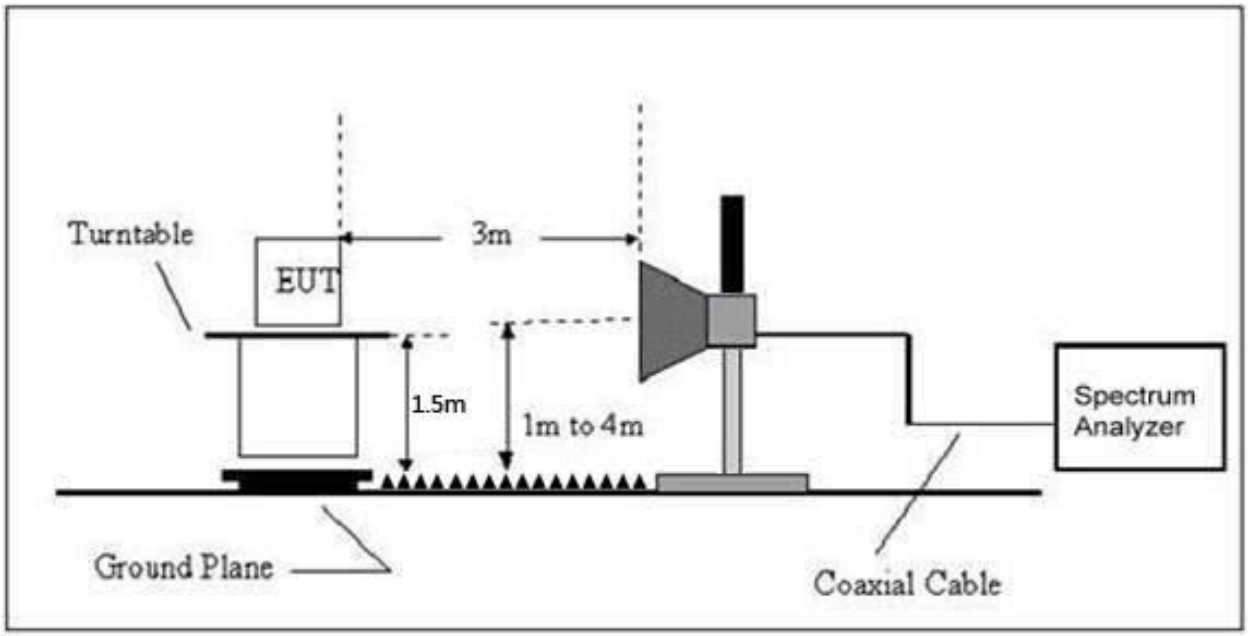

7.2 Limit

20dBc in any 100 kHz bandwidth outside the operating frequency band. In case the emission fall within the restricted band specified on 15.205(a), then the 15.209(a) limit in the table below has to be followed.

Frequency	Field Strength	Distance	Field Strength Limit at 3m Distance	
(MHz)	uV/m	(m)	uV/m	dBuV/m
0.009 ~ 0.490	2400/F(kHz)	300	10000 * 2400/F(kHz)	$20\log^{(2400/F(kHz))} + 80$
0.490 ~ 1.705	24000/F(kHz)	30	100 * 24000/F(kHz)	$20\log^{(24000/F(kHz))} + 40$
1.705 ~ 30	30	30	100 * 30	$20\log^{(30)} + 40$
30 ~ 88	100	3	100	$20\log^{(100)}$
88 ~ 216	150	3	150	$20\log^{(150)}$
216 ~ 960	200	3	200	$20\log^{(200)}$
Above 960	500	3	500	$20\log^{(500)}$

Limits Of Radiated Emission Measurement (Above 1000MHz)

Frequency (MHz)	Limit (dBuV/m) (at 3M)	
	Peak	Average
Above 1000	74	54

Notes:
(1) The limit for radiated test was performed according to FCC PART 15C.
(2) The tighter limit applies at the band edges.
(3) Emission level (dBuV/m)=20log Emission level (uV/m).

7.3 Test Procedure

The test site semi-anechoic chamber has met the requirement of NSA tolerance 4 dB according to the standards: ANSI C63.10-2013. The test distance is 3m.The setup is according to the requirements in Section 13.1.4.1 of ANSI C63.10-2013 and CAN/CSA-CEI/IEC CISPR 22.
This test is required for any spurious emission that falls in a Restricted Band, as defined in Section 15.205. It must be performed with the highest gain of each type of antenna proposed for use with the EUT.
Use the following spectrum analyzer settings:

Spectrum Parameter	Setting
Attenuation	Auto
Start Frequency	1000 MHz
Stop Frequency	10th carrier harmonic
RB / VB (emission in restricted band)	1 MHz / 1 MHz for Peak, 1 MHz / 10Hz for Average

Receiver Parameter	Setting
Attenuation	Auto
Start ~ Stop Frequency	9kHz~150kHz / RB 200Hz for QP
Start ~ Stop Frequency	150kHz~30MHz / RB 9kHz for QP
Start ~ Stop Frequency	30MHz~1000MHz / RB 120kHz for QP

a. The measuring distance of at 3 m shall be used for measurements at frequency up to 1GHz. For frequencies above 1GHz, any suitable measuring distance may be used.
b. The EUT was placed on the top of a rotating table 0.8 m for below 1GHz and 1.5m for above 1GHz the ground at a 3 meter. The table was rotated 360 degrees to determine the position of the highest radiation.
c. The height of the equipment or of the substitution antenna shall be 0.8 m for below 1GHz and 1.5m for above 1GHz; the height of the test antenna shall vary between 1 m to 4 m. Both horizontal and vertical polarizations of the antenna are set to make the measurement.
d. The initial step in collecting conducted emission data is a spectrum analyzer peak detector mode pre-scanning the measurement frequency range. Significant peaks are then marked and then Quasi Peak detector mode re-measured.
e. If the Peak Mode measured value compliance with and lower than Quasi Peak Mode Limit, the EUT shall be deemed to meet QP Limits and then no additional QP Mode measurement performed.
f. For the actual test configuration, please refer to the related Item –EUT Test Photos.

Note:

Both horizontal and vertical antenna polarities were tested
and performed pretest to three orthogonal axis. The worst case emissions were reported

During the radiated emission test, the Spectrum Analyzer was set with the following configurations:

Frequency Band (MHz)	Function	Resolution bandwidth	Video Bandwidth
30 to 1000	QP	120 kHz	300 kHz
Above 1000	Peak	1 MHz	1 MHz
	Average	1 MHz	10 Hz

Note: for the frequency ranges below 30 MHz, a narrower RBW is used for these ranges but the measured value should add a RBW correction factor (RBWCF) where RBWCF [dB] =10*lg(100 [kHz]/narrower RBW [kHz]). , the narrower RBW is 1 kHz and RBWCF is 20 dB for the frequency 9 kHz to 150 kHz, and the narrower RBW is 10 kHz and RBWCF is 10 dB for the frequency 150 kHz to 30 MHz.

7.4 EUT Operating Conditions

The EUT was configured for testing in a typical fashion (as a customer would normally use it). The EUT has been programmed to continuously transmit during test. This operating condition was tested and used to collect the included data.

7.5 Test Result

Below 30MHz

Temperature:	26 ℃	Relative Humidity:	54%
Pressure:	101KPa	Test Voltage:	DC 3.3V
Test Mode:	Mode 4	Polarization :	--

Freq.	Reading	Limit	Margin	State
(MHz)	(dBuV/m)	(dBuV/m)	(dB)	P/F
--	--	--	--	PASS
--	--	--	--	PASS

Note:
The amplitude of spurious emissions which are attenuated by more than 20dB below the permissible value has no need to be reported.
Distance extrapolation factor =40 log (specific distance/test distance)(dB);
Limit line = specific limits(dBuv) + distance extrapolation factor.

Between 30MHz – 1GHz

Temperature:	26 ℃	Relative Humidity:	54%
Pressure:	101KPa	Phase :	Horizontal
Test Mode:	Mode 4	Test Voltage:	DC 3.3V

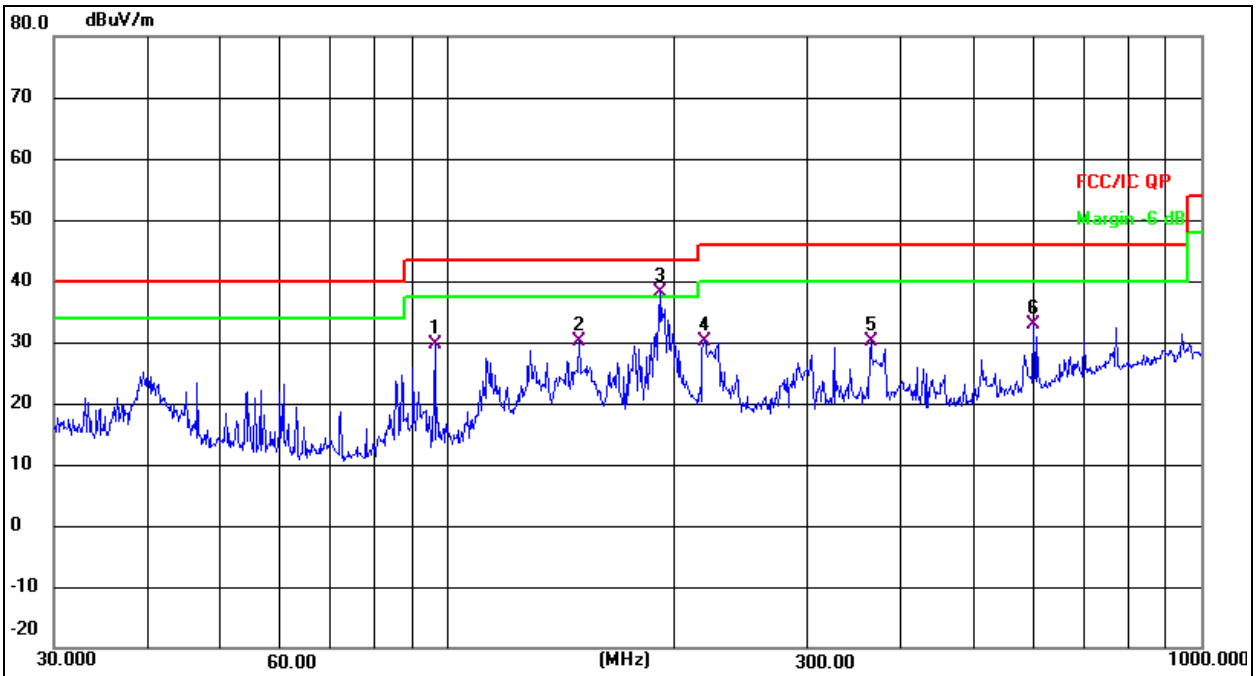

Remark:
1.Factor = Antenna Factor + Cable Loss – Pre-amplifier.
2. Measurement=Reading Level+ Correct Factor
3. Over=Measurement-Limit

No.	Frequency (MHz)	Reading (dBuV)	Factor (dB/m)	Level (dBuV/m)	Limit (dBuV/m)	Margin (dB)	Detector
1	96.0986	45.16	-15.43	29.73	43.50	-13.77	QP
2	149.4857	41.09	-10.94	30.15	43.50	-13.35	QP
3 *	191.7450	52.22	-13.99	38.23	43.50	-5.27	QP
4	219.0753	44.07	-13.84	30.23	46.00	-15.77	QP
5	364.2595	38.92	-8.67	30.25	46.00	-15.75	QP
6	599.3212	35.45	-2.62	32.83	46.00	-13.17	QP

Temperature:	26 ℃	Relative Humidity:	54%
Pressure:	101KPa	Phase :	Vertical
Test Mode:	Mode 4	Test Voltage:	DC 3.3V

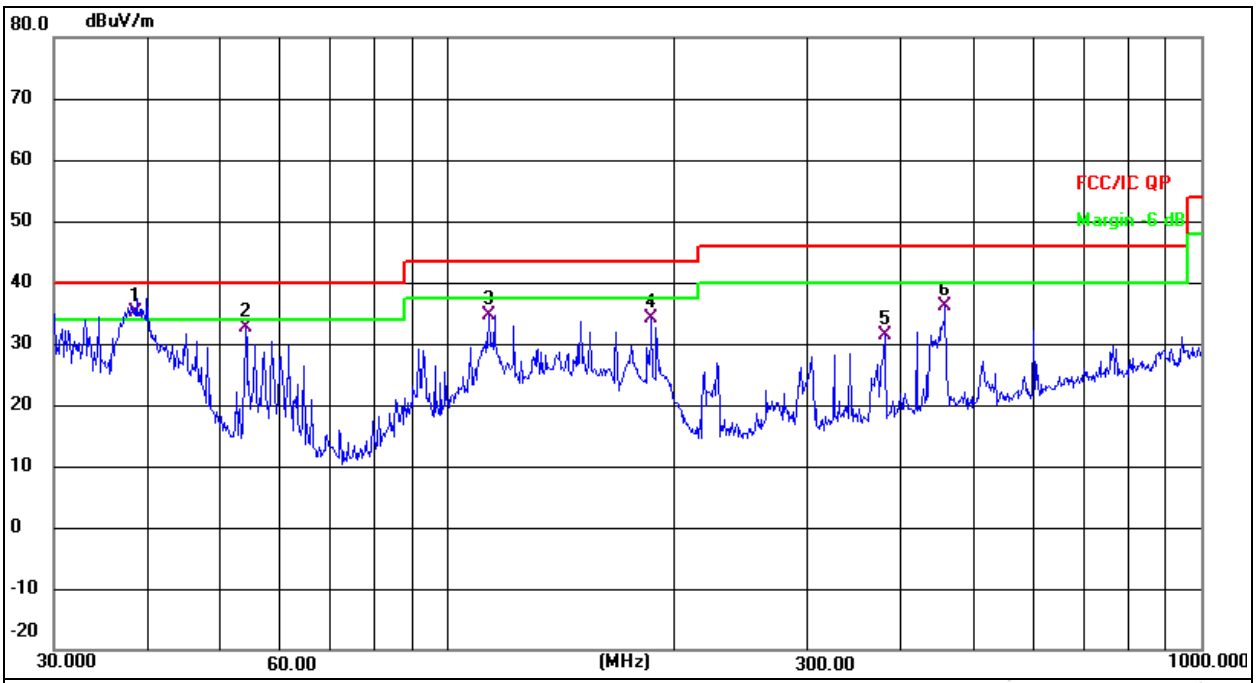

Remark:
1.Factor = Antenna Factor + Cable Loss – Pre-amplifier.
2. Measurement=Reading Level+ Correct Factor
3. Over=Measurement-Limit

No.	Frequency (MHz)	Reading (dBuV)	Factor (dB/m)	Level (dBuV/m)	Limit (dBuV/m)	Margin (dB)	Detector
1 *	38.6160	48.03	-12.82	35.21	40.00	-4.79	QP
2	53.8818	46.51	-13.93	32.58	40.00	-7.42	QP
3	113.3163	48.75	-14.05	34.70	43.50	-8.80	QP
4	186.4409	47.82	-13.60	34.22	43.50	-9.28	QP
5	379.9141	39.59	-8.20	31.39	46.00	-14.61	QP
6	457.5073	42.33	-6.22	36.11	46.00	-9.89	QP

Between 1GHz – 40GHz

Test Mode:	TX(5.1G) - 802.11a

Polar	Frequency	Reading Level	Correct Factor	Measure-ment	Limits	Over	Detector Type
(H/V)	(MHz)	(dBuV/m)	(dB)	(dBuV/m)	(dBuV/m)	(dB)	
Low Channel (5180 MHz)-Above 1G							
Vertical	4434.178	74.70	-20.73	53.97	68.2	-14.23	PK
Vertical	4434.178	59.88	-20.73	39.15	54	-14.85	AV
Vertical	10360.079	63.86	-9.36	54.50	68.2	-13.70	PK
Vertical	10360.079	49.26	-9.36	39.90	54	-14.10	AV
Vertical	15540.072	63.97	-7.84	56.13	74	-17.87	PK
Vertical	15540.072	49.90	-7.84	42.06	54	-11.94	AV
Horizontal	4434.027	73.69	-20.73	52.96	68.2	-15.24	PK
Horizontal	4434.027	59.47	-20.73	38.74	54	-15.26	AV
Horizontal	10360.165	61.42	-9.36	52.06	68.2	-16.14	PK
Horizontal	10360.165	49.52	-9.36	40.16	54	-13.84	AV
Horizontal	15540.148	60.12	-7.84	52.28	74	-21.72	PK
Horizontal	15540.148	49.77	-7.84	41.93	54	-12.07	AV
Middle Channel (5200 MHz)-Above 1G							
Vertical	4592.116	73.63	-20.42	53.22	74	-20.78	PK
Vertical	4592.116	59.76	-20.42	39.35	54	-14.65	AV
Vertical	10400.120	60.16	-9.30	50.86	68.2	-17.34	PK
Vertical	10400.120	49.33	-9.30	40.03	54	-13.97	AV
Vertical	15600.052	64.14	-7.82	56.32	74	-17.68	PK
Vertical	15600.052	49.36	-7.82	41.54	54	-12.46	AV
Horizontal	4592.113	70.59	-20.42	50.18	74	-23.82	PK
Horizontal	4592.113	59.21	-20.42	38.80	54	-15.20	AV
Horizontal	10400.118	64.85	-9.30	55.55	68.2	-12.65	PK
Horizontal	10400.118	49.01	-9.30	39.71	54	-14.29	AV
Horizontal	15600.101	60.97	-7.82	53.15	74	-20.85	PK
Horizontal	15600.101	49.84	-7.82	42.02	54	-11.98	AV
High Channel (5240 MHz)-Above 1G							
Vertical	4739.090	73.34	-20.12	53.22	74	-20.78	PK
Vertical	4739.090	59.64	-20.12	39.52	54	-14.48	AV
Vertical	10480.187	61.39	-9.18	52.21	68.2	-15.99	PK
Vertical	10480.187	49.90	-9.18	40.72	54	-13.28	AV
Vertical	15720.010	61.88	-7.78	54.10	74	-19.90	PK
Vertical	15720.010	49.19	-7.78	41.41	54	-12.59	AV
Horizontal	4739.101	71.48	-20.12	51.36	74	-22.64	PK
Horizontal	4739.101	59.95	-20.12	39.83	54	-14.17	AV
Horizontal	10480.088	61.06	-9.18	51.88	68.2	-16.32	PK
Horizontal	10480.088	49.25	-9.18	40.07	54	-13.93	AV
Horizontal	15720.085	64.39	-7.78	56.61	74	-17.39	PK
Horizontal	15720.085	49.65	-7.78	41.87	54	-12.13	AV

Note: PK value is lower than the Average value limit, So average didn't record.
The 26.5-40G amplitude of spurious emissions that are attenuated by more than 20dB below the permissible value has no need to be reported.
Emission level (dBuV/m) = 20 log Emission level (uV/m).
Corrected Reading: Antenna Factor + Cable Loss + Read Level - Preamp Factor = Level.
The worst case is Antenna A.

Test Mode:	TX(5.1G) - 802.11n-HT20

Polar	Frequency	Reading Level	Correct Factor	Measure-ment	Limits	Over	Detector Type
(H/V)	(MHz)	(dBuV/m)	(dB)	(dBuV/m)	(dBuV/m)	(dB)	
Low Channel (5180 MHz)-Above 1G							
Vertical	4434.119	74.79	-20.73	54.06	68.2	-14.14	PK
Vertical	4434.119	59.27	-20.73	38.54	54	-15.46	AV
Vertical	10360.018	63.64	-9.36	54.28	68.2	-13.92	PK
Vertical	10360.018	50.00	-9.36	40.64	54	-13.36	AV
Vertical	15540.120	64.24	-7.84	56.40	74	-17.60	PK
Vertical	15540.120	49.60	-7.84	41.76	54	-12.24	AV
Horizontal	4434.131	71.80	-20.73	51.07	68.2	-17.13	PK
Horizontal	4434.131	59.23	-20.73	38.50	54	-15.50	AV
Horizontal	10360.071	63.34	-9.36	53.98	68.2	-14.22	PK
Horizontal	10360.071	49.39	-9.36	40.03	54	-13.97	AV
Horizontal	15540.144	63.01	-7.84	55.17	74	-18.83	PK
Horizontal	15540.144	49.08	-7.84	41.24	54	-12.76	AV
Middle Channel (5200 MHz)-Above 1G							
Vertical	4592.179	72.38	-20.42	51.97	74	-22.03	PK
Vertical	4592.179	59.22	-20.42	38.80	54	-15.20	AV
Vertical	10400.151	60.49	-9.30	51.19	68.2	-17.01	PK
Vertical	10400.151	49.50	-9.30	40.20	54	-13.80	AV
Vertical	15600.084	64.59	-7.82	56.77	74	-17.23	PK
Vertical	15600.084	49.31	-7.82	41.49	54	-12.51	AV
Horizontal	4592.186	71.12	-20.42	50.70	74	-23.30	PK
Horizontal	4592.186	59.30	-20.42	38.89	54	-15.11	AV
Horizontal	10400.045	64.35	-9.30	55.05	68.2	-13.15	PK
Horizontal	10400.045	49.46	-9.30	40.16	54	-13.84	AV
Horizontal	15600.035	64.67	-7.82	56.85	74	-17.15	PK
Horizontal	15600.035	49.22	-7.82	41.40	54	-12.60	AV
High Channel (5240 MHz)-Above 1G							
Vertical	4739.132	72.79	-20.12	52.67	74	-21.33	PK
Vertical	4739.132	59.06	-20.12	38.94	54	-15.06	AV
Vertical	10480.178	64.66	-9.18	55.48	68.2	-12.72	PK
Vertical	10480.178	49.98	-9.18	40.80	54	-13.20	AV
Vertical	15720.046	61.98	-7.78	54.20	74	-19.80	PK
Vertical	15720.046	49.57	-7.78	41.79	54	-12.21	AV
Horizontal	4739.048	70.58	-20.12	50.46	74	-23.54	PK
Horizontal	4739.048	59.93	-20.12	39.81	54	-14.19	AV
Horizontal	10480.051	60.76	-9.18	51.58	68.2	-16.62	PK
Horizontal	10480.051	49.25	-9.18	40.07	54	-13.93	AV
Horizontal	15720.115	62.89	-7.78	55.11	74	-18.89	PK
Horizontal	15720.115	49.86	-7.78	42.08	54	-11.92	AV

Note: PK value is lower than the Average value limit, So average didn't record.
The 26.5-40G amplitude of spurious emissions that are attenuated by more than 20dB below the permissible value has no need to be reported.
Emission level (dBuV/m) = 20 log Emission level (uV/m).
Corrected Reading: Antenna Factor + Cable Loss + Read Level - Preamp Factor = Level.
Test Mode is MIMO Mode.

Test Mode:	TX(5.1G) - 802.11n-HT40

Polar	Frequency	Reading Level	Correct Factor	Measure-ment	Limits	Over	Detector Type
(H/V)	(MHz)	(dBuV/m)	(dB)	(dBuV/m)	(dBuV/m)	(dB)	
Low Channel (5190 MHz)-Above 1G							
Vertical	4434.179	74.48	-20.73	53.75	68.2	-14.45	PK
Vertical	4434.179	59.30	-20.73	38.56	54	-15.44	AV
Vertical	10380.124	62.70	-9.33	53.37	68.2	-14.83	PK
Vertical	10380.124	49.67	-9.33	40.34	54	-13.66	AV
Vertical	15570.187	61.72	-7.83	53.89	74	-20.11	PK
Vertical	15570.187	50.00	-7.83	42.17	54	-11.83	AV
Horizontal	4434.142	74.27	-20.73	53.54	74	-20.46	PK
Horizontal	4434.142	59.98	-20.73	39.24	54	-14.76	AV
Horizontal	10380.061	61.89	-9.33	52.56	68.2	-15.64	PK
Horizontal	10380.061	49.06	-9.33	39.73	54	-14.27	AV
Horizontal	15570.179	61.35	-7.83	53.52	74	-20.48	PK
Horizontal	15570.179	49.92	-7.83	42.09	54	-11.91	AV
Middle Channel (5230 MHz)-Above 1G							
Vertical	4739.064	72.83	-20.12	52.71	68.2	-15.49	PK
Vertical	4739.064	59.90	-20.12	39.78	54	-14.22	AV
Vertical	10460.118	63.27	-9.21	54.06	68.2	-14.14	PK
Vertical	10460.118	49.73	-9.21	40.52	54	-13.48	AV
Vertical	15690.180	60.33	-7.79	52.54	74	-21.46	PK
Vertical	15690.180	49.05	-7.79	41.26	54	-12.74	AV
Horizontal	4739.024	74.09	-20.12	53.97	68.2	-14.23	PK
Horizontal	4739.024	59.95	-20.12	39.83	54	-14.17	AV
Horizontal	10460.105	62.86	-9.21	53.65	68.2	-14.55	PK
Horizontal	10460.105	49.54	-9.21	40.33	54	-13.67	AV
Horizontal	15690.102	63.20	-7.79	55.41	74	-18.59	PK
Horizontal	15690.102	49.53	-7.79	41.74	54	-12.26	AV

Note: PK value is lower than the Average value limit, So average didn't record.
The 26.5-40G amplitude of spurious emissions that are attenuated by more than 20dB below the permissible value has no need to be reported.
Emission level (dBuV/m) = 20 log Emission level (uV/m).
Corrected Reading: Antenna Factor + Cable Loss + Read Level - Preamp Factor = Level.
Test Mode is MIMO Mode.

Test Mode:	TX(5.1G) - 802.11ac-HT20

Polar	Frequency	Reading Level	Correct Factor	Measure-ment	Limits	Over	Detector Type
(H/V)	(MHz)	(dBuV/m)	(dB)	(dBuV/m)	(dBuV/m)	(dB)	
Low Channel (5180 MHz)-Above 1G							
Vertical	4434.173	71.28	-20.73	50.55	68.2	-17.65	PK
Vertical	4434.173	59.21	-20.73	38.48	54	-15.52	AV
Vertical	10360.076	64.96	-9.36	55.60	68.2	-12.60	PK
Vertical	10360.076	49.94	-9.36	40.58	54	-13.42	AV
Vertical	15540.150	62.49	-7.84	54.65	74	-19.35	PK
Vertical	15540.150	49.40	-7.84	41.56	54	-12.44	AV
Horizontal	4434.189	70.48	-20.73	49.75	68.2	-18.45	PK
Horizontal	4434.189	59.75	-20.73	39.02	54	-14.98	AV
Horizontal	10360.099	60.55	-9.36	51.19	68.2	-17.01	PK
Horizontal	10360.099	49.52	-9.36	40.16	54	-13.84	AV
Horizontal	15540.197	62.89	-7.84	55.05	74	-18.95	PK
Horizontal	15540.197	49.54	-7.84	41.70	54	-12.30	AV
Middle Channel (5200 MHz)-Above 1G							
Vertical	4592.154	73.34	-20.42	52.92	74	-21.08	PK
Vertical	4592.154	59.63	-20.42	39.21	54	-14.79	AV
Vertical	10400.120	63.89	-9.30	54.59	68.2	-13.61	PK
Vertical	10400.120	49.05	-9.30	39.75	54	-14.25	AV
Vertical	15600.013	62.56	-7.82	54.74	74	-19.26	PK
Vertical	15600.013	49.19	-7.82	41.37	54	-12.63	AV
Horizontal	4592.032	71.61	-20.42	51.19	74	-22.81	PK
Horizontal	4592.032	59.89	-20.42	39.47	54	-14.53	AV
Horizontal	10400.120	61.01	-9.30	51.71	68.2	-16.49	PK
Horizontal	10400.120	49.56	-9.30	40.26	54	-13.74	AV
Horizontal	15600.004	61.64	-7.82	53.82	74	-20.18	PK
Horizontal	15600.004	49.77	-7.82	41.95	54	-12.05	AV
High Channel (5240 MHz)-Above 1G							
Vertical	4739.121	71.92	-20.12	51.80	74	-22.20	PK
Vertical	4739.121	59.57	-20.12	39.45	54	-14.55	AV
Vertical	10480.123	61.16	-9.18	51.98	68.2	-16.22	PK
Vertical	10480.123	49.17	-9.18	39.99	54	-14.01	AV
Vertical	15720.062	64.81	-7.78	57.03	74	-16.97	PK
Vertical	15720.062	49.27	-7.78	41.49	54	-12.51	AV
Horizontal	4739.033	74.37	-20.12	54.25	74	-19.75	PK
Horizontal	4739.033	59.98	-20.12	39.86	54	-14.14	AV
Horizontal	10480.174	62.34	-9.18	53.16	68.2	-15.04	PK
Horizontal	10480.174	49.97	-9.18	40.79	54	-13.21	AV
Horizontal	15720.096	63.76	-7.78	55.98	74	-18.02	PK
Horizontal	15720.096	49.32	-7.78	41.54	54	-12.46	AV

Note: PK value is lower than the Average value limit, So average didn't record.
The 26.5-40G amplitude of spurious emissions that are attenuated by more than 20dB below the permissible value has no need to be reported.
Emission level (dBuV/m) = 20 log Emission level (uV/m).
Corrected Reading: Antenna Factor + Cable Loss + Read Level - Preamp Factor = Level.
Test Mode is MIMO Mode.

Test Mode:	TX(5.1G) - 802.11ac-HT40

Polar	Frequency	Reading Level	Correct Factor	Measure-ment	Limits	Over	Detector Type
(H/V)	(MHz)	(dBuV/m)	(dB)	(dBuV/m)	(dBuV/m)	(dB)	
Low Channel (5190 MHz)-Above 1G							
Vertical	4434.196	72.57	-20.73	51.84	68.2	-16.36	PK
Vertical	4434.196	59.65	-20.73	38.92	54	-15.08	AV
Vertical	10380.021	63.66	-9.33	54.33	68.2	-13.87	PK
Vertical	10380.021	49.90	-9.33	40.57	54	-13.43	AV
Vertical	15570.163	61.55	-7.83	53.72	74	-20.28	PK
Vertical	15570.163	49.93	-7.83	42.10	54	-11.90	AV
Horizontal	4434.161	74.05	-20.73	53.31	74	-20.69	PK
Horizontal	4434.161	59.18	-20.73	38.44	54	-15.56	AV
Horizontal	10380.177	63.61	-9.33	54.28	68.2	-13.92	PK
Horizontal	10380.177	49.18	-9.33	39.85	54	-14.15	AV
Horizontal	15570.122	60.53	-7.83	52.70	74	-21.30	PK
Horizontal	15570.122	49.33	-7.83	41.50	54	-12.50	AV
Middle Channel (5230 MHz)-Above 1G							
Vertical	4739.051	72.37	-20.12	52.25	68.2	-15.95	PK
Vertical	4739.051	59.53	-20.12	39.41	54	-14.59	AV
Vertical	10460.034	61.59	-9.21	52.38	68.2	-15.82	PK
Vertical	10460.034	49.30	-9.21	40.09	54	-13.91	AV
Vertical	15690.087	61.85	-7.79	54.06	74	-19.94	PK
Vertical	15690.087	49.07	-7.79	41.28	54	-12.72	AV
Horizontal	4739.132	72.67	-20.12	52.55	68.2	-15.65	PK
Horizontal	4739.132	59.89	-20.12	39.77	54	-14.23	AV
Horizontal	10460.064	62.06	-9.21	52.85	68.2	-15.35	PK
Horizontal	10460.064	49.55	-9.21	40.34	54	-13.66	AV
Horizontal	15690.155	63.74	-7.79	55.95	74	-18.05	PK
Horizontal	15690.155	49.44	-7.79	41.65	54	-12.35	AV

Note: PK value is lower than the Average value limit, So average didn't record.
The 26.5-40G amplitude of spurious emissions that are attenuated by more than 20dB below the permissible value has no need to be reported.
Emission level (dBuV/m) = 20 log Emission level (uV/m).
Corrected Reading: Antenna Factor + Cable Loss + Read Level - Preamp Factor = Level.
Test Mode is MIMO Mode.

Test Mode:	TX(5.1G) - 802.11ac 80

Polar	Frequency	Reading Level	Correct Factor	Measure-ment	Limits	Over	Detector Type
(H/V)	(MHz)	(dBuV/m)	(dB)	(dBuV/m)	(dBuV/m)	(dB)	
Low Channel (5210 MHz)-Above 1G							
Vertical	4434.137	74.83	-20.73	54.10	68.2	-14.10	PK
Vertical	4434.137	59.69	-20.73	38.96	54	-15.04	AV
Vertical	10420.159	60.10	-9.27	50.83	68.2	-17.37	PK
Vertical	10420.159	49.55	-9.27	40.28	54	-13.72	AV
Vertical	15630.163	60.02	-7.81	52.21	74	-21.79	PK
Vertical	15630.163	49.31	-7.81	41.50	54	-12.50	AV
Horizontal	4434.056	70.97	-20.73	50.24	68.2	-17.96	PK
Horizontal	4434.056	59.52	-20.73	38.79	54	-15.21	AV
Horizontal	10420.168	42.12	9.27	51.39	68.2	-16.81	PK
Horizontal	10420.168	29.90	9.27	39.17	54	-14.83	AV
Horizontal	15630.037	60.74	-7.81	52.93	74	-21.07	PK
Horizontal	15630.037	49.36	-7.81	41.55	54	-12.45	AV

Note: PK value is lower than the Average value limit, So average didn't record.
The 26.5-40G amplitude of spurious emissions that are attenuated by more than 20dB below the permissible value has no need to be reported.
Emission level (dBuV/m) = 20 log Emission level (uV/m).
Corrected Reading: Antenna Factor + Cable Loss + Read Level - Preamp Factor = Level.
Test Mode is MIMO Mode.

Test Mode:	TX(5.1G) - 802.11ax-HT20

Polar	Frequency	Reading Level	Correct Factor	Measure-ment	Limits	Over	Detector Type
(H/V)	(MHz)	(dBuV/m)	(dB)	(dBuV/m)	(dBuV/m)	(dB)	
Low Channel (5180 MHz)-Above 1G							
Vertical	4434.047	72.88	-20.73	52.15	68.2	-16.05	PK
Vertical	4434.047	59.80	-20.73	39.07	54	-14.93	AV
Vertical	10360.074	62.89	-9.36	53.53	68.2	-14.67	PK
Vertical	10360.074	49.27	-9.36	39.91	54	-14.09	AV
Vertical	15540.198	64.63	-7.84	56.79	74	-17.21	PK
Vertical	15540.198	49.63	-7.84	41.79	54	-12.21	AV
Horizontal	4434.134	74.33	-20.73	53.60	68.2	-14.60	PK
Horizontal	4434.134	59.78	-20.73	39.05	54	-14.95	AV
Horizontal	10360.172	62.39	-9.36	53.03	68.2	-15.17	PK
Horizontal	10360.172	49.51	-9.36	40.15	54	-13.85	AV
Horizontal	15540.097	60.91	-7.84	53.07	74	-20.93	PK
Horizontal	15540.097	49.39	-7.84	41.55	54	-12.45	AV
Middle Channel (5200 MHz)-Above 1G							
Vertical	4592.157	74.97	-20.42	54.55	74	-19.45	PK
Vertical	4592.157	59.38	-20.42	38.96	54	-15.04	AV
Vertical	10400.175	62.96	-9.30	53.66	68.2	-14.54	PK
Vertical	10400.175	49.16	-9.30	39.86	54	-14.14	AV
Vertical	15600.033	60.41	-7.82	52.59	74	-21.41	PK
Vertical	15600.033	49.31	-7.82	41.49	54	-12.51	AV
Horizontal	4592.074	72.25	-20.42	51.84	74	-22.16	PK
Horizontal	4592.074	59.67	-20.42	39.25	54	-14.75	AV
Horizontal	10400.114	64.33	-9.30	55.03	68.2	-13.17	PK
Horizontal	10400.114	49.58	-9.30	40.28	54	-13.72	AV
Horizontal	15600.052	61.67	-7.82	53.85	74	-20.15	PK
Horizontal	15600.052	49.75	-7.82	41.93	54	-12.07	AV
High Channel (5240 MHz)-Above 1G							
Vertical	4739.037	70.61	-20.12	50.49	74	-23.51	PK
Vertical	4739.037	59.51	-20.12	39.39	54	-14.61	AV
Vertical	10480.088	62.12	-9.18	52.94	68.2	-15.26	PK
Vertical	10480.088	49.29	-9.18	40.11	54	-13.89	AV
Vertical	15720.054	60.99	-7.78	53.21	74	-20.79	PK
Vertical	15720.054	49.68	-7.78	41.90	54	-12.10	AV
Horizontal	4739.110	74.97	-20.12	54.85	74	-19.15	PK
Horizontal	4739.110	59.20	-20.12	39.08	54	-14.92	AV
Horizontal	10480.136	60.64	-9.18	51.46	68.2	-16.74	PK
Horizontal	10480.136	49.24	-9.18	40.06	54	-13.94	AV
Horizontal	15720.087	61.77	-7.78	53.99	74	-20.01	PK
Horizontal	15720.087	49.83	-7.78	42.05	54	-11.95	AV

Note: PK value is lower than the Average value limit, So average didn't record.
The 26.5-40G amplitude of spurious emissions that are attenuated by more than 20dB below the permissible value has no need to be reported.
Emission level (dBuV/m) = 20 log Emission level (uV/m).
Corrected Reading: Antenna Factor + Cable Loss + Read Level - Preamp Factor = Level.
Test Mode is MIMO Mode.

Test Mode:	TX(5.1G) - 802.11ax-HT40

Polar	Frequency	Reading Level	Correct Factor	Measure-ment	Limits	Over	Detector Type
(H/V)	(MHz)	(dBuV/m)	(dB)	(dBuV/m)	(dBuV/m)	(dB)	
Low Channel (5190 MHz)-Above 1G							
Vertical	4434.194	70.30	-20.73	49.56	68.2	-18.64	PK
Vertical	4434.194	59.21	-20.73	38.48	54	-15.52	AV
Vertical	10380.020	63.36	-9.33	54.03	68.2	-14.17	PK
Vertical	10380.020	49.94	-9.33	40.61	54	-13.39	AV
Vertical	15570.167	62.31	-7.83	54.48	74	-19.52	PK
Vertical	15570.167	49.69	-7.83	41.86	54	-12.14	AV
Horizontal	4434.119	71.75	-20.73	51.02	74	-22.98	PK
Horizontal	4434.119	59.83	-20.73	39.10	54	-14.90	AV
Horizontal	10380.087	61.68	-9.33	52.35	68.2	-15.85	PK
Horizontal	10380.087	49.36	-9.33	40.03	54	-13.97	AV
Horizontal	15570.062	60.29	-7.83	52.46	74	-21.54	PK
Horizontal	15570.062	49.82	-7.83	41.99	54	-12.01	AV
Middle Channel (5230 MHz)-Above 1G							
Vertical	4739.079	70.46	-20.12	50.34	68.2	-17.86	PK
Vertical	4739.079	59.56	-20.12	39.43	54	-14.57	AV
Vertical	10460.018	61.86	-9.21	52.65	68.2	-15.55	PK
Vertical	10460.018	49.81	-9.21	40.60	54	-13.40	AV
Vertical	15690.136	64.54	-7.79	56.75	74	-17.25	PK
Vertical	15690.136	49.46	-7.79	41.67	54	-12.33	AV
Horizontal	4739.175	71.10	-20.12	50.97	68.2	-17.23	PK
Horizontal	4739.175	59.68	-20.12	39.56	54	-14.44	AV
Horizontal	10460.154	64.43	-9.21	55.22	68.2	-12.98	PK
Horizontal	10460.154	49.53	-9.21	40.32	54	-13.68	AV
Horizontal	15690.006	62.87	-7.79	55.08	74	-18.92	PK
Horizontal	15690.006	49.86	-7.79	42.07	54	-11.93	AV

Note: PK value is lower than the Average value limit, So average didn't record.
The 26.5-40G amplitude of spurious emissions that are attenuated by more than 20dB below the permissible value has no need to be reported.
Emission level (dBuV/m) = 20 log Emission level (uV/m).
Corrected Reading: Antenna Factor + Cable Loss + Read Level - Preamp Factor = Level.
Test Mode is MIMO Mode.

Test Mode:	TX(5.1G) - 802.11ax 80

Polar	Frequency	Reading Level	Correct Factor	Measure-ment	Limits	Over	Detector Type
(H/V)	(MHz)	(dBuV/m)	(dB)	(dBuV/m)	(dBuV/m)	(dB)	
Low Channel (5210 MHz)-Above 1G							
Vertical	4434.096	73.74	-20.73	53.01	68.2	-15.19	PK
Vertical	4434.096	59.67	-20.73	38.94	54	-15.06	AV
Vertical	10420.071	62.50	-9.27	53.23	68.2	-14.97	PK
Vertical	10420.071	49.32	-9.27	40.05	54	-13.95	AV
Vertical	15630.009	62.14	-7.81	54.33	74	-19.67	PK
Vertical	15630.009	49.28	-7.81	41.47	54	-12.53	AV
Horizontal	4434.067	73.60	-20.73	52.86	68.2	-15.34	PK
Horizontal	4434.067	59.90	-20.73	39.17	54	-14.83	AV
Horizontal	10420.147	44.71	9.27	53.98	68.2	-14.22	PK
Horizontal	10420.147	29.25	9.27	38.52	54	-15.48	AV
Horizontal	15630.053	61.58	-7.81	53.77	74	-20.23	PK
Horizontal	15630.053	49.12	-7.81	41.31	54	-12.69	AV

Note: PK value is lower than the Average value limit, So average didn't record.
The 26.5-40G amplitude of spurious emissions that are attenuated by more than 20dB below the permissible value has no need to be reported.
Emission level (dBuV/m) = 20 log Emission level (uV/m).
Corrected Reading: Antenna Factor + Cable Loss + Read Level - Preamp Factor = Level.
Test Mode is MIMO Mode.

Test Mode:	TX(5.1G) - 802.11be-HT20

Polar	Frequency	Reading Level	Correct Factor	Measure-ment	Limits	Over	Detector Type
(H/V)	(MHz)	(dBuV/m)	(dB)	(dBuV/m)	(dBuV/m)	(dB)	
Low Channel (5180 MHz)-Above 1G							
Vertical	4434.087	72.68	-20.73	51.95	68.2	-16.25	PK
Vertical	4434.087	59.17	-20.73	38.43	54	-15.57	AV
Vertical	10360.099	61.24	-9.36	51.88	68.2	-16.32	PK
Vertical	10360.099	49.08	-9.36	39.72	54	-14.28	AV
Vertical	15540.171	63.42	-7.84	55.58	74	-18.42	PK
Vertical	15540.171	49.75	-7.84	41.91	54	-12.09	AV
Horizontal	4434.009	73.42	-20.73	52.69	68.2	-15.51	PK
Horizontal	4434.009	59.75	-20.73	39.02	54	-14.98	AV
Horizontal	10360.107	60.65	-9.36	51.29	68.2	-16.91	PK
Horizontal	10360.107	49.86	-9.36	40.50	54	-13.50	AV
Horizontal	15540.063	61.59	-7.84	53.75	74	-20.25	PK
Horizontal	15540.063	49.01	-7.84	41.17	54	-12.83	AV
Middle Channel (5200 MHz)-Above 1G							
Vertical	4592.052	72.10	-20.42	51.68	74	-22.32	PK
Vertical	4592.052	59.83	-20.42	39.41	54	-14.59	AV
Vertical	10400.027	64.19	-9.30	54.89	68.2	-13.31	PK
Vertical	10400.027	49.62	-9.30	40.32	54	-13.68	AV
Vertical	15600.117	61.80	-7.82	53.98	74	-20.02	PK
Vertical	15600.117	49.78	-7.82	41.96	54	-12.04	AV
Horizontal	4592.122	70.71	-20.42	50.29	74	-23.71	PK
Horizontal	4592.122	59.73	-20.42	39.31	54	-14.69	AV
Horizontal	10400.104	63.31	-9.30	54.01	68.2	-14.19	PK
Horizontal	10400.104	49.35	-9.30	40.05	54	-13.95	AV
Horizontal	15600.116	63.11	-7.82	55.29	74	-18.71	PK
Horizontal	15600.116	49.92	-7.82	42.10	54	-11.90	AV
High Channel (5240 MHz)-Above 1G							
Vertical	4739.090	72.57	-20.12	52.45	74	-21.55	PK
Vertical	4739.090	59.77	-20.12	39.65	54	-14.35	AV
Vertical	10480.112	60.81	-9.18	51.63	68.2	-16.57	PK
Vertical	10480.112	49.82	-9.18	40.64	54	-13.36	AV
Vertical	15720.063	63.25	-7.78	55.47	74	-18.53	PK
Vertical	15720.063	49.74	-7.78	41.96	54	-12.04	AV
Horizontal	4739.089	71.78	-20.12	51.66	74	-22.34	PK
Horizontal	4739.089	59.06	-20.12	38.94	54	-15.06	AV
Horizontal	10480.178	63.00	-9.18	53.82	68.2	-14.38	PK
Horizontal	10480.178	49.65	-9.18	40.47	54	-13.53	AV
Horizontal	15720.028	61.71	-7.78	53.93	74	-20.07	PK
Horizontal	15720.028	49.64	-7.78	41.86	54	-12.14	AV

Note: PK value is lower than the Average value limit, So average didn't record.
The 26.5-40G amplitude of spurious emissions that are attenuated by more than 20dB below the permissible value has no need to be reported.
Emission level (dBuV/m) = 20 log Emission level (uV/m).
Corrected Reading: Antenna Factor + Cable Loss + Read Level - Preamp Factor = Level.
Test Mode is MIMO Mode.

Test Mode:	TX(5.1G) - 802.11be-HT40

Polar	Frequency	Reading Level	Correct Factor	Measure-ment	Limits	Over	Detector Type
(H/V)	(MHz)	(dBuV/m)	(dB)	(dBuV/m)	(dBuV/m)	(dB)	
Low Channel (5190 MHz)-Above 1G							
Vertical	4434.180	70.01	-20.73	49.28	68.2	-18.92	PK
Vertical	4434.180	59.25	-20.73	38.52	54	-15.48	AV
Vertical	10380.155	63.40	-9.33	54.07	68.2	-14.13	PK
Vertical	10380.155	49.60	-9.33	40.27	54	-13.73	AV
Vertical	15570.075	63.28	-7.83	55.45	74	-18.55	PK
Vertical	15570.075	49.33	-7.83	41.50	54	-12.50	AV
Horizontal	4434.099	72.24	-20.73	51.51	74	-22.49	PK
Horizontal	4434.099	59.85	-20.73	39.12	54	-14.88	AV
Horizontal	10380.171	64.10	-9.33	54.77	68.2	-13.43	PK
Horizontal	10380.171	49.06	-9.33	39.73	54	-14.27	AV
Horizontal	15570.188	63.74	-7.83	55.91	74	-18.09	PK
Horizontal	15570.188	49.23	-7.83	41.40	54	-12.60	AV
Middle Channel (5230 MHz)-Above 1G							
Vertical	4739.064	71.30	-20.12	51.18	68.2	-17.02	PK
Vertical	4739.064	59.53	-20.12	39.41	54	-14.59	AV
Vertical	10460.137	63.98	-9.21	54.77	68.2	-13.43	PK
Vertical	10460.137	49.70	-9.21	40.49	54	-13.51	AV
Vertical	15690.081	62.03	-7.79	54.24	74	-19.76	PK
Vertical	15690.081	49.93	-7.79	42.14	54	-11.86	AV
Horizontal	4739.053	71.29	-20.12	51.17	68.2	-17.03	PK
Horizontal	4739.053	59.16	-20.12	39.04	54	-14.96	AV
Horizontal	10460.148	63.28	-9.21	54.07	68.2	-14.13	PK
Horizontal	10460.148	49.43	-9.21	40.22	54	-13.78	AV
Horizontal	15690.172	61.30	-7.79	53.51	74	-20.49	PK
Horizontal	15690.172	49.53	-7.79	41.74	54	-12.26	AV

Note: PK value is lower than the Average value limit, So average didn't record.
The 26.5-40G amplitude of spurious emissions that are attenuated by more than 20dB below the permissible value has no need to be reported.
Emission level (dBuV/m) = 20 log Emission level (uV/m).
Corrected Reading: Antenna Factor + Cable Loss + Read Level - Preamp Factor = Level.
Test Mode is MIMO Mode.

Test Mode:	TX(5.1G) - 802.11be 80

Polar	Frequency	Reading Level	Correct Factor	Measure-ment	Limits	Over	Detector Type
(H/V)	(MHz)	(dBuV/m)	(dB)	(dBuV/m)	(dBuV/m)	(dB)	
Low Channel (5210 MHz)-Above 1G							
Vertical	4434.096	74.71	-20.73	53.98	68.2	-14.22	PK
Vertical	4434.096	59.98	-20.73	39.25	54	-14.75	AV
Vertical	10420.085	61.76	-9.27	52.49	68.2	-15.71	PK
Vertical	10420.085	49.15	-9.27	39.88	54	-14.12	AV
Vertical	15630.168	63.25	-7.81	55.44	74	-18.56	PK
Vertical	15630.168	49.42	-7.81	41.61	54	-12.39	AV
Horizontal	4434.039	73.50	-20.73	52.76	68.2	-15.44	PK
Horizontal	4434.039	59.63	-20.73	38.90	54	-15.10	AV
Horizontal	10420.181	42.45	9.27	51.72	68.2	-16.48	PK
Horizontal	10420.181	29.22	9.27	38.49	54	-15.51	AV
Horizontal	15630.040	63.88	-7.81	56.07	74	-17.93	PK
Horizontal	15630.040	49.15	-7.81	41.34	54	-12.66	AV

Note: PK value is lower than the Average value limit, So average didn't record.
The 26.5-40G amplitude of spurious emissions that are attenuated by more than 20dB below the permissible value has no need to be reported.
Emission level (dBuV/m) = 20 log Emission level (uV/m).
Corrected Reading: Antenna Factor + Cable Loss + Read Level - Preamp Factor = Level.
Test Mode is MIMO Mode.

Test Mode:	TX(5.3G) - 802.11a

Polar (H/V)	Frequency (MHz)	Reading Level (dBuV/m)	Correct Factor (dB)	Measure-ment (dBuV/m)	Limits (dBuV/m)	Over (dB)	Detector Type
Low Channel (5260 MHz)-Above 1G							
Vertical	4434.075	73.51	-20.73	52.78	68.2	-15.42	PK
Vertical	4434.075	59.52	-20.73	38.79	54	-15.21	AV
Vertical	10520.035	60.35	-9.12	51.23	68.2	-16.97	PK
Vertical	10520.035	49.33	-9.12	40.21	54	-13.79	AV
Vertical	15780.009	60.12	-7.77	52.35	74	-21.65	PK
Vertical	15780.009	49.31	-7.77	41.54	54	-12.46	AV
Horizontal	4434.057	73.45	-20.73	52.72	68.2	-15.48	PK
Horizontal	4434.057	59.89	-20.73	39.16	54	-14.84	AV
Horizontal	10520.082	60.52	-9.12	51.40	68.2	-16.80	PK
Horizontal	10520.082	49.89	-9.12	40.77	54	-13.23	AV
Horizontal	15780.037	60.53	-7.77	52.76	74	-21.24	PK
Horizontal	15780.037	49.06	-7.77	41.29	54	-12.71	AV
Middle Channel (5280 MHz)-Above 1G							
Vertical	4592.051	72.25	-20.42	51.84	74	-22.16	PK
Vertical	4592.051	59.41	-20.42	38.99	54	-15.01	AV
Vertical	10560.198	63.32	-9.06	54.26	68.2	-13.94	PK
Vertical	10560.198	49.11	-9.06	40.05	54	-13.95	AV
Vertical	15840.098	64.35	-7.75	56.60	74	-17.40	PK
Vertical	15840.098	49.52	-7.75	41.77	54	-12.23	AV
Horizontal	4592.002	72.56	-20.42	52.14	74	-21.86	PK
Horizontal	4592.002	59.97	-20.42	39.55	54	-14.45	AV
Horizontal	10560.199	64.42	-9.06	55.36	68.2	-12.84	PK
Horizontal	10560.199	49.33	-9.06	40.27	54	-13.73	AV
Horizontal	15840.154	62.44	-7.75	54.69	74	-19.31	PK
Horizontal	15840.154	49.72	-7.75	41.97	54	-12.03	AV
High Channel (5320 MHz)-Above 1G							
Vertical	4739.192	70.72	-20.12	50.59	74	-23.41	PK
Vertical	4739.192	59.53	-20.12	39.40	54	-14.60	AV
Vertical	10640.195	63.48	-8.94	54.54	68.2	-13.66	PK
Vertical	10640.195	49.09	-8.94	40.15	54	-13.85	AV
Vertical	15960.102	64.78	-7.71	57.07	74	-16.93	PK
Vertical	15960.102	49.29	-7.71	41.58	54	-12.42	AV
Horizontal	4739.060	70.22	-20.12	50.10	74	-23.90	PK
Horizontal	4739.060	59.95	-20.12	39.83	54	-14.17	AV
Horizontal	10640.125	64.00	-8.94	55.06	68.2	-13.14	PK
Horizontal	10640.125	49.50	-8.94	40.56	54	-13.44	AV
Horizontal	15960.065	64.92	-7.71	57.21	74	-16.79	PK
Horizontal	15960.065	49.04	-7.71	41.33	54	-12.67	AV

Note: PK value is lower than the Average value limit, So average didn't record.
The 26.5-40G amplitude of spurious emissions that are attenuated by more than 20dB below the permissible value has no need to be reported.
Emission level (dBuV/m) = 20 log Emission level (uV/m).
Corrected Reading: Antenna Factor + Cable Loss + Read Level - Preamp Factor = Level.
The worst case is Antenna A.

Test Mode:	TX(5.3G) - 802.11n-HT20

Polar	Frequency	Reading Level	Correct Factor	Measure-ment	Limits	Over	Detector Type
(H/V)	(MHz)	(dBuV/m)	(dB)	(dBuV/m)	(dBuV/m)	(dB)	
Low Channel (5260 MHz)-Above 1G							
Vertical	4434.035	73.22	-20.73	52.49	68.2	-15.71	PK
Vertical	4434.035	59.48	-20.73	38.75	54	-15.25	AV
Vertical	10520.062	60.24	-9.12	51.12	68.2	-17.08	PK
Vertical	10520.062	49.44	-9.12	40.32	54	-13.68	AV
Vertical	15780.051	62.13	-7.77	54.36	74	-19.64	PK
Vertical	15780.051	49.38	-7.77	41.61	54	-12.39	AV
Horizontal	4434.012	72.43	-20.73	51.70	68.2	-16.50	PK
Horizontal	4434.012	59.92	-20.73	39.19	54	-14.81	AV
Horizontal	10520.181	62.56	-9.12	53.44	68.2	-14.76	PK
Horizontal	10520.181	49.68	-9.12	40.56	54	-13.44	AV
Horizontal	15780.044	61.21	-7.77	53.44	74	-20.56	PK
Horizontal	15780.044	49.23	-7.77	41.46	54	-12.54	AV
Middle Channel (5280 MHz)-Above 1G							
Vertical	4592.069	72.48	-20.42	52.07	74	-21.93	PK
Vertical	4592.069	59.71	-20.42	39.30	54	-14.70	AV
Vertical	10560.158	63.22	-9.06	54.16	68.2	-14.04	PK
Vertical	10560.158	49.76	-9.06	40.70	54	-13.30	AV
Vertical	15840.043	61.66	-7.75	53.91	74	-20.09	PK
Vertical	15840.043	49.28	-7.75	41.53	54	-12.47	AV
Horizontal	4592.195	71.30	-20.42	50.88	74	-23.12	PK
Horizontal	4592.195	59.68	-20.42	39.26	54	-14.74	AV
Horizontal	10560.184	62.81	-9.06	53.75	68.2	-14.45	PK
Horizontal	10560.184	49.20	-9.06	40.14	54	-13.86	AV
Horizontal	15840.107	62.36	-7.75	54.61	74	-19.39	PK
Horizontal	15840.107	49.94	-7.75	42.19	54	-11.81	AV
High Channel (5320 MHz)-Above 1G							
Vertical	4739.055	73.53	-20.12	53.41	74	-20.59	PK
Vertical	4739.055	59.23	-20.12	39.11	54	-14.89	AV
Vertical	10640.009	62.95	-8.94	54.01	68.2	-14.19	PK
Vertical	10640.009	49.83	-8.94	40.89	54	-13.11	AV
Vertical	15960.192	61.72	-7.71	54.01	74	-19.99	PK
Vertical	15960.192	49.09	-7.71	41.38	54	-12.62	AV
Horizontal	4739.003	74.50	-20.12	54.38	74	-19.62	PK
Horizontal	4739.003	59.11	-20.12	38.99	54	-15.01	AV
Horizontal	10640.140	64.59	-8.94	55.65	68.2	-12.55	PK
Horizontal	10640.140	49.40	-8.94	40.46	54	-13.54	AV
Horizontal	15960.050	64.37	-7.71	56.66	74	-17.34	PK
Horizontal	15960.050	49.98	-7.71	42.27	54	-11.73	AV

Note: PK value is lower than the Average value limit, So average didn't record.
The 26.5-40G amplitude of spurious emissions that are attenuated by more than 20dB below the permissible value has no need to be reported.
Emission level (dBuV/m) = 20 log Emission level (uV/m).
Corrected Reading: Antenna Factor + Cable Loss + Read Level - Preamp Factor = Level.
Test Mode is MIMO Mode.

Test Mode:	TX(5.3G) - 802.11n-HT40

Polar	Frequency	Reading Level	Correct Factor	Measure-ment	Limits	Over	Detector Type
(H/V)	(MHz)	(dBuV/m)	(dB)	(dBuV/m)	(dBuV/m)	(dB)	
Low Channel (5270 MHz)-Above 1G							
Vertical	4434.147	74.71	-20.73	53.98	68.2	-14.22	PK
Vertical	4434.147	59.94	-20.73	39.21	54	-14.79	AV
Vertical	10540.027	61.48	-9.09	52.39	68.2	-15.81	PK
Vertical	10540.027	49.58	-9.09	40.49	54	-13.51	AV
Vertical	15810.090	64.08	-7.76	56.32	74	-17.68	PK
Vertical	15810.090	49.33	-7.76	41.57	54	-12.43	AV
Horizontal	4434.199	72.34	-20.73	51.61	74	-22.39	PK
Horizontal	4434.199	59.62	-20.73	38.88	54	-15.12	AV
Horizontal	10540.045	64.35	-9.09	55.26	68.2	-12.94	PK
Horizontal	10540.045	49.71	-9.09	40.62	54	-13.38	AV
Horizontal	15810.180	60.70	-7.76	52.94	74	-21.06	PK
Horizontal	15810.180	49.00	-7.76	41.24	54	-12.76	AV
Middle Channel (5310 MHz)-Above 1G							
Vertical	4739.037	70.49	-20.12	50.36	68.2	-17.84	PK
Vertical	4739.037	59.82	-20.12	39.70	54	-14.30	AV
Vertical	10620.057	64.12	-8.97	55.15	68.2	-13.05	PK
Vertical	10620.057	49.74	-8.97	40.77	54	-13.23	AV
Vertical	15930.084	64.96	-7.72	57.24	74	-16.76	PK
Vertical	15930.084	49.51	-7.72	41.79	54	-12.21	AV
Horizontal	4739.090	73.83	-20.12	53.71	68.2	-14.49	PK
Horizontal	4739.090	59.67	-20.12	39.55	54	-14.45	AV
Horizontal	10620.156	63.95	-8.97	54.98	68.2	-13.22	PK
Horizontal	10620.156	49.87	-8.97	40.90	54	-13.10	AV
Horizontal	15930.142	61.46	-7.72	53.74	74	-20.26	PK
Horizontal	15930.142	49.79	-7.72	42.07	54	-11.93	AV

Note: PK value is lower than the Average value limit, So average didn't record.
The 26.5-40G amplitude of spurious emissions that are attenuated by more than 20dB below the permissible value has no need to be reported.
Emission level (dBuV/m) = 20 log Emission level (uV/m).
Corrected Reading: Antenna Factor + Cable Loss + Read Level - Preamp Factor = Level.
Test Mode is MIMO Mode.

Test Mode:	TX(5.3G) - 802.11ac-HT20

Polar	Frequency	Reading Level	Correct Factor	Measure-ment	Limits	Over	Detector Type
(H/V)	(MHz)	(dBuV/m)	(dB)	(dBuV/m)	(dBuV/m)	(dB)	
Low Channel (5260 MHz)-Above 1G							
Vertical	4434.087	73.17	-20.73	52.44	68.2	-15.76	PK
Vertical	4434.087	59.24	-20.73	38.51	54	-15.49	AV
Vertical	10520.090	61.42	-9.12	52.30	68.2	-15.90	PK
Vertical	10520.090	49.68	-9.12	40.56	54	-13.44	AV
Vertical	15780.047	62.84	-7.77	55.07	74	-18.93	PK
Vertical	15780.047	49.80	-7.77	42.03	54	-11.97	AV
Horizontal	4434.120	74.36	-20.73	53.63	68.2	-14.57	PK
Horizontal	4434.120	59.72	-20.73	38.99	54	-15.01	AV
Horizontal	10520.008	60.30	-9.12	51.18	68.2	-17.02	PK
Horizontal	10520.008	49.70	-9.12	40.58	54	-13.42	AV
Horizontal	15780.130	62.12	-7.77	54.35	74	-19.65	PK
Horizontal	15780.130	49.25	-7.77	41.48	54	-12.52	AV
Middle Channel (5280 MHz)-Above 1G							
Vertical	4592.052	72.66	-20.42	52.25	74	-21.75	PK
Vertical	4592.052	59.39	-20.42	38.97	54	-15.03	AV
Vertical	10560.030	60.34	-9.06	51.28	68.2	-16.92	PK
Vertical	10560.030	49.65	-9.06	40.59	54	-13.41	AV
Vertical	15840.085	63.77	-7.75	56.02	74	-17.98	PK
Vertical	15840.085	49.70	-7.75	41.95	54	-12.05	AV
Horizontal	4592.157	74.26	-20.42	53.84	74	-20.16	PK
Horizontal	4592.157	59.20	-20.42	38.78	54	-15.22	AV
Horizontal	10560.180	61.21	-9.06	52.15	68.2	-16.05	PK
Horizontal	10560.180	49.35	-9.06	40.29	54	-13.71	AV
Horizontal	15840.180	64.19	-7.75	56.44	74	-17.56	PK
Horizontal	15840.180	49.92	-7.75	42.17	54	-11.83	AV
High Channel (5320 MHz)-Above 1G							
Vertical	4739.070	72.95	-20.12	52.83	74	-21.17	PK
Vertical	4739.070	59.23	-20.12	39.11	54	-14.89	AV
Vertical	10640.122	64.46	-8.94	55.52	68.2	-12.68	PK
Vertical	10640.122	49.44	-8.94	40.50	54	-13.50	AV
Vertical	15960.128	60.97	-7.71	53.26	74	-20.74	PK
Vertical	15960.128	49.18	-7.71	41.47	54	-12.53	AV
Horizontal	4739.108	71.66	-20.12	51.54	74	-22.46	PK
Horizontal	4739.108	59.81	-20.12	39.69	54	-14.31	AV
Horizontal	10640.027	62.09	-8.94	53.15	68.2	-15.05	PK
Horizontal	10640.027	49.35	-8.94	40.41	54	-13.59	AV
Horizontal	15960.105	64.41	-7.71	56.70	74	-17.30	PK
Horizontal	15960.105	49.08	-7.71	41.37	54	-12.63	AV

Note: PK value is lower than the Average value limit, So average didn't record.
The 26.5-40G amplitude of spurious emissions that are attenuated by more than 20dB below the permissible value has no need to be reported.
Emission level (dBuV/m) = 20 log Emission level (uV/m).
Corrected Reading: Antenna Factor + Cable Loss + Read Level - Preamp Factor = Level.
Test Mode is MIMO Mode.

Test Mode:	TX(5.3G) - 802.11ac-HT40

Polar	Frequency	Reading Level	Correct Factor	Measure-ment	Limits	Over	Detector Type
(H/V)	(MHz)	(dBuV/m)	(dB)	(dBuV/m)	(dBuV/m)	(dB)	
Low Channel (5270 MHz)-Above 1G							
Vertical	4434.081	70.56	-20.73	49.83	68.2	-18.37	PK
Vertical	4434.081	59.04	-20.73	38.31	54	-15.69	AV
Vertical	10540.017	63.28	-9.09	54.19	68.2	-14.01	PK
Vertical	10540.017	49.38	-9.09	40.29	54	-13.71	AV
Vertical	15810.192	61.36	-7.76	53.60	74	-20.40	PK
Vertical	15810.192	49.43	-7.76	41.67	54	-12.33	AV
Horizontal	4434.020	74.58	-20.73	53.85	74	-20.15	PK
Horizontal	4434.020	59.94	-20.73	39.21	54	-14.79	AV
Horizontal	10540.146	63.91	-9.09	54.82	68.2	-13.38	PK
Horizontal	10540.146	49.88	-9.09	40.79	54	-13.21	AV
Horizontal	15810.132	60.61	-7.76	52.85	74	-21.15	PK
Horizontal	15810.132	49.49	-7.76	41.73	54	-12.27	AV
Middle Channel (5310 MHz)-Above 1G							
Vertical	4739.112	73.48	-20.12	53.36	68.2	-14.84	PK
Vertical	4739.112	59.24	-20.12	39.12	54	-14.88	AV
Vertical	10620.114	61.87	-8.97	52.90	68.2	-15.30	PK
Vertical	10620.114	49.19	-8.97	40.22	54	-13.78	AV
Vertical	15930.055	63.71	-7.72	55.99	74	-18.01	PK
Vertical	15930.055	49.87	-7.72	42.15	54	-11.85	AV
Horizontal	4739.182	72.03	-20.12	51.90	68.2	-16.30	PK
Horizontal	4739.182	59.81	-20.12	39.69	54	-14.31	AV
Horizontal	10620.198	62.81	-8.97	53.84	68.2	-14.36	PK
Horizontal	10620.198	49.40	-8.97	40.43	54	-13.57	AV
Horizontal	15930.116	63.20	-7.72	55.48	74	-18.52	PK
Horizontal	15930.116	49.46	-7.72	41.74	54	-12.26	AV

Note: PK value is lower than the Average value limit, So average didn't record.
The 26.5-40G amplitude of spurious emissions that are attenuated by more than 20dB below the permissible value has no need to be reported.
Emission level (dBuV/m) = 20 log Emission level (uV/m).
Corrected Reading: Antenna Factor + Cable Loss + Read Level - Preamp Factor = Level.
Test Mode is MIMO Mode.

Test Mode:	TX(5.3G) - 802.11ac 80

Polar	Frequency	Reading Level	Correct Factor	Measure-ment	Limits	Over	Detector Type
(H/V)	(MHz)	(dBuV/m)	(dB)	(dBuV/m)	(dBuV/m)	(dB)	
Low Channel (5290 MHz)-Above 1G							
Vertical	4434.186	72.66	-20.73	51.93	68.2	-16.27	PK
Vertical	4434.186	59.00	-20.73	38.27	54	-15.73	AV
Vertical	10580.090	60.36	-9.03	51.33	68.2	-16.87	PK
Vertical	10580.090	49.66	-9.03	40.63	54	-13.37	AV
Vertical	15870.030	61.20	-7.74	53.46	74	-20.54	PK
Vertical	15870.030	49.07	-7.74	41.33	54	-12.67	AV
Horizontal	4434.095	71.39	-20.73	50.66	68.2	-17.54	PK
Horizontal	4434.095	59.66	-20.73	38.93	54	-15.07	AV
Horizontal	10580.001	60.29	-9.03	51.26	68.2	-16.94	PK
Horizontal	10580.001	49.24	-9.03	40.21	54	-13.79	AV
Horizontal	15870.027	62.85	-7.74	55.11	74	-18.89	PK
Horizontal	15870.027	49.91	-7.74	42.17	54	-11.83	AV

Note: PK value is lower than the Average value limit, So average didn't record.
The 26.5-40G amplitude of spurious emissions that are attenuated by more than 20dB below the permissible value has no need to be reported.
Emission level (dBuV/m) = 20 log Emission level (uV/m).
Corrected Reading: Antenna Factor + Cable Loss + Read Level - Preamp Factor = Level.
Test Mode is MIMO Mode.

Test Mode:	TX(5.3G) - 802.11ax-HT20

Polar	Frequency	Reading Level	Correct Factor	Measure-ment	Limits	Over	Detector Type
(H/V)	(MHz)	(dBuV/m)	(dB)	(dBuV/m)	(dBuV/m)	(dB)	
Low Channel (5260 MHz)-Above 1G							
Vertical	4434.183	73.43	-20.73	52.69	68.2	-15.51	PK
Vertical	4434.183	59.41	-20.73	38.68	54	-15.32	AV
Vertical	10520.100	63.30	-9.12	54.18	68.2	-14.02	PK
Vertical	10520.100	49.73	-9.12	40.61	54	-13.39	AV
Vertical	15780.095	60.52	-7.77	52.75	74	-21.25	PK
Vertical	15780.095	49.60	-7.77	41.83	54	-12.17	AV
Horizontal	4434.007	72.41	-20.73	51.68	68.2	-16.52	PK
Horizontal	4434.007	59.65	-20.73	38.92	54	-15.08	AV
Horizontal	10520.148	64.44	-9.12	55.32	68.2	-12.88	PK
Horizontal	10520.148	49.63	-9.12	40.51	54	-13.49	AV
Horizontal	15780.067	64.81	-7.77	57.04	74	-16.96	PK
Horizontal	15780.067	49.06	-7.77	41.29	54	-12.71	AV
Middle Channel (5280 MHz)-Above 1G							
Vertical	4592.063	71.48	-20.42	51.06	74	-22.94	PK
Vertical	4592.063	59.16	-20.42	38.75	54	-15.25	AV
Vertical	10560.107	64.73	-9.06	55.67	68.2	-12.53	PK
Vertical	10560.107	49.64	-9.06	40.58	54	-13.42	AV
Vertical	15840.084	63.06	-7.75	55.31	74	-18.69	PK
Vertical	15840.084	49.45	-7.75	41.70	54	-12.30	AV
Horizontal	4592.052	72.77	-20.42	52.35	74	-21.65	PK
Horizontal	4592.052	59.86	-20.42	39.44	54	-14.56	AV
Horizontal	10560.071	61.44	-9.06	52.38	68.2	-15.82	PK
Horizontal	10560.071	49.43	-9.06	40.37	54	-13.63	AV
Horizontal	15840.058	63.89	-7.75	56.14	74	-17.86	PK
Horizontal	15840.058	49.08	-7.75	41.33	54	-12.67	AV
High Channel (5320 MHz)-Above 1G							
Vertical	4739.196	71.60	-20.12	51.48	74	-22.52	PK
Vertical	4739.196	59.60	-20.12	39.47	54	-14.53	AV
Vertical	10640.027	64.72	-8.94	55.78	68.2	-12.42	PK
Vertical	10640.027	49.46	-8.94	40.52	54	-13.48	AV
Vertical	15960.156	60.16	-7.71	52.45	74	-21.55	PK
Vertical	15960.156	49.66	-7.71	41.95	54	-12.05	AV
Horizontal	4739.048	74.23	-20.12	54.11	74	-19.89	PK
Horizontal	4739.048	59.15	-20.12	39.03	54	-14.97	AV
Horizontal	10640.001	60.08	-8.94	51.14	68.2	-17.06	PK
Horizontal	10640.001	49.74	-8.94	40.80	54	-13.20	AV
Horizontal	15960.100	61.54	-7.71	53.83	74	-20.17	PK
Horizontal	15960.100	49.27	-7.71	41.56	54	-12.44	AV

Note: PK value is lower than the Average value limit, So average didn't record.
The 26.5-40G amplitude of spurious emissions that are attenuated by more than 20dB below the permissible value has no need to be reported.
Emission level (dBuV/m) = 20 log Emission level (uV/m).
Corrected Reading: Antenna Factor + Cable Loss + Read Level - Preamp Factor = Level.
Test Mode is MIMO Mode.

Test Mode:	TX(5.3G) - 802.11ax-HT40

Polar	Frequency	Reading Level	Correct Factor	Measure-ment	Limits	Over	Detector Type
(H/V)	(MHz)	(dBuV/m)	(dB)	(dBuV/m)	(dBuV/m)	(dB)	
Low Channel (5270 MHz)-Above 1G							
Vertical	4434.192	74.03	-20.73	53.30	68.2	-14.90	PK
Vertical	4434.192	59.64	-20.73	38.91	54	-15.09	AV
Vertical	10540.001	63.56	-9.09	54.47	68.2	-13.73	PK
Vertical	10540.001	49.42	-9.09	40.33	54	-13.67	AV
Vertical	15810.090	61.34	-7.76	53.58	74	-20.42	PK
Vertical	15810.090	49.70	-7.76	41.94	54	-12.06	AV
Horizontal	4434.024	71.22	-20.73	50.48	74	-23.52	PK
Horizontal	4434.024	59.77	-20.73	39.04	54	-14.96	AV
Horizontal	10540.157	61.53	-9.09	52.44	68.2	-15.76	PK
Horizontal	10540.157	49.92	-9.09	40.83	54	-13.17	AV
Horizontal	15810.053	61.90	-7.76	54.14	74	-19.86	PK
Horizontal	15810.053	49.20	-7.76	41.44	54	-12.56	AV
Middle Channel (5310 MHz)-Above 1G							
Vertical	4739.011	73.74	-20.12	53.61	68.2	-14.59	PK
Vertical	4739.011	59.80	-20.12	39.68	54	-14.32	AV
Vertical	10620.131	60.60	-8.97	51.63	68.2	-16.57	PK
Vertical	10620.131	49.23	-8.97	40.26	54	-13.74	AV
Vertical	15930.046	64.66	-7.72	56.94	74	-17.06	PK
Vertical	15930.046	49.07	-7.72	41.35	54	-12.65	AV
Horizontal	4739.069	73.16	-20.12	53.03	68.2	-15.17	PK
Horizontal	4739.069	59.50	-20.12	39.38	54	-14.62	AV
Horizontal	10620.097	63.43	-8.97	54.46	68.2	-13.74	PK
Horizontal	10620.097	49.43	-8.97	40.46	54	-13.54	AV
Horizontal	15930.171	63.69	-7.72	55.97	74	-18.03	PK
Horizontal	15930.171	49.16	-7.72	41.44	54	-12.56	AV

Note: PK value is lower than the Average value limit, So average didn't record.
The 26.5-40G amplitude of spurious emissions that are attenuated by more than 20dB below the permissible value has no need to be reported.
Emission level (dBuV/m) = 20 log Emission level (uV/m).
Corrected Reading: Antenna Factor + Cable Loss + Read Level - Preamp Factor = Level.
Test Mode is MIMO Mode.

Test Mode:	TX(5.3G) - 802.11ax 80

Polar	Frequency	Reading Level	Correct Factor	Measure-ment	Limits	Over	Detector Type
(H/V)	(MHz)	(dBuV/m)	(dB)	(dBuV/m)	(dBuV/m)	(dB)	
Low Channel (5290 MHz)-Above 1G							
Vertical	4434.080	72.92	-20.73	52.19	68.2	-16.01	PK
Vertical	4434.080	59.63	-20.73	38.90	54	-15.10	AV
Vertical	10580.071	63.70	-9.03	54.67	68.2	-13.53	PK
Vertical	10580.071	49.19	-9.03	40.16	54	-13.84	AV
Vertical	15870.108	61.78	-7.74	54.04	74	-19.96	PK
Vertical	15870.108	49.12	-7.74	41.38	54	-12.62	AV
Horizontal	4434.008	72.63	-20.73	51.90	68.2	-16.30	PK
Horizontal	4434.008	59.51	-20.73	38.77	54	-15.23	AV
Horizontal	10580.091	61.43	-9.03	52.40	68.2	-15.80	PK
Horizontal	10580.091	49.44	-9.03	40.41	54	-13.59	AV
Horizontal	15870.147	64.04	-7.74	56.30	74	-17.70	PK
Horizontal	15870.147	49.13	-7.74	41.39	54	-12.61	AV

Note: PK value is lower than the Average value limit, So average didn't record.
The 26.5-40G amplitude of spurious emissions that are attenuated by more than 20dB below the permissible value has no need to be reported.
Emission level (dBuV/m) = 20 log Emission level (uV/m).
Corrected Reading: Antenna Factor + Cable Loss + Read Level - Preamp Factor = Level.
Test Mode is MIMO Mode.

Test Mode:	TX(5.3G) - 802.11be-HT20

Polar	Frequency	Reading Level	Correct Factor	Measure-ment	Limits	Over	Detector Type
(H/V)	(MHz)	(dBuV/m)	(dB)	(dBuV/m)	(dBuV/m)	(dB)	
Low Channel (5260 MHz)-Above 1G							
Vertical	4434.095	73.87	-20.73	53.14	68.2	-15.06	PK
Vertical	4434.095	59.69	-20.73	38.96	54	-15.04	AV
Vertical	10520.199	63.40	-9.12	54.28	68.2	-13.92	PK
Vertical	10520.199	49.47	-9.12	40.35	54	-13.65	AV
Vertical	15780.063	60.51	-7.77	52.74	74	-21.26	PK
Vertical	15780.063	49.19	-7.77	41.42	54	-12.58	AV
Horizontal	4434.177	73.16	-20.73	52.43	68.2	-15.77	PK
Horizontal	4434.177	59.54	-20.73	38.81	54	-15.19	AV
Horizontal	10520.148	64.11	-9.12	54.99	68.2	-13.21	PK
Horizontal	10520.148	49.54	-9.12	40.42	54	-13.58	AV
Horizontal	15780.053	63.22	-7.77	55.45	74	-18.55	PK
Horizontal	15780.053	49.48	-7.77	41.71	54	-12.29	AV
Middle Channel (5280 MHz)-Above 1G							
Vertical	4592.105	74.32	-20.42	53.90	74	-20.10	PK
Vertical	4592.105	59.75	-20.42	39.34	54	-14.66	AV
Vertical	10560.189	61.60	-9.06	52.54	68.2	-15.66	PK
Vertical	10560.189	49.87	-9.06	40.81	54	-13.19	AV
Vertical	15840.145	60.06	-7.75	52.31	74	-21.69	PK
Vertical	15840.145	49.84	-7.75	42.09	54	-11.91	AV
Horizontal	4592.132	74.56	-20.42	54.14	74	-19.86	PK
Horizontal	4592.132	59.29	-20.42	38.87	54	-15.13	AV
Horizontal	10560.073	61.64	-9.06	52.58	68.2	-15.62	PK
Horizontal	10560.073	49.63	-9.06	40.57	54	-13.43	AV
Horizontal	15840.099	62.94	-7.75	55.19	74	-18.81	PK
Horizontal	15840.099	49.29	-7.75	41.54	54	-12.46	AV
High Channel (5320 MHz)-Above 1G							
Vertical	4739.157	70.80	-20.12	50.67	74	-23.33	PK
Vertical	4739.157	59.38	-20.12	39.25	54	-14.75	AV
Vertical	10640.138	60.55	-8.94	51.61	68.2	-16.59	PK
Vertical	10640.138	49.90	-8.94	40.96	54	-13.04	AV
Vertical	15960.006	60.25	-7.71	52.54	74	-21.46	PK
Vertical	15960.006	49.60	-7.71	41.89	54	-12.11	AV
Horizontal	4739.180	74.26	-20.12	54.14	74	-19.86	PK
Horizontal	4739.180	59.03	-20.12	38.91	54	-15.09	AV
Horizontal	10640.137	63.87	-8.94	54.93	68.2	-13.27	PK
Horizontal	10640.137	49.81	-8.94	40.87	54	-13.13	AV
Horizontal	15960.106	63.43	-7.71	55.72	74	-18.28	PK
Horizontal	15960.106	49.60	-7.71	41.89	54	-12.11	AV

Note: PK value is lower than the Average value limit, So average didn't record.
The 26.5-40G amplitude of spurious emissions that are attenuated by more than 20dB below the permissible value has no need to be reported.
Emission level (dBuV/m) = 20 log Emission level (uV/m).
Corrected Reading: Antenna Factor + Cable Loss + Read Level - Preamp Factor = Level.
Test Mode is MIMO Mode.

Test Mode:	TX(5.3G) - 802.11be-HT40

Polar	Frequency	Reading Level	Correct Factor	Measure-ment	Limits	Over	Detector Type
(H/V)	(MHz)	(dBuV/m)	(dB)	(dBuV/m)	(dBuV/m)	(dB)	
Low Channel (5270 MHz)-Above 1G							
Vertical	4434.033	74.10	-20.73	53.37	68.2	-14.83	PK
Vertical	4434.033	59.92	-20.73	39.18	54	-14.82	AV
Vertical	10540.048	60.39	-9.09	51.30	68.2	-16.90	PK
Vertical	10540.048	49.79	-9.09	40.70	54	-13.30	AV
Vertical	15810.006	62.29	-7.76	54.53	74	-19.47	PK
Vertical	15810.006	49.09	-7.76	41.33	54	-12.67	AV
Horizontal	4434.102	74.09	-20.73	53.35	74	-20.65	PK
Horizontal	4434.102	59.15	-20.73	38.42	54	-15.58	AV
Horizontal	10540.165	63.07	-9.09	53.98	68.2	-14.22	PK
Horizontal	10540.165	49.70	-9.09	40.61	54	-13.39	AV
Horizontal	15810.145	61.17	-7.76	53.41	74	-20.59	PK
Horizontal	15810.145	49.60	-7.76	41.84	54	-12.16	AV
Middle Channel (5310 MHz)-Above 1G							
Vertical	4739.075	71.18	-20.12	51.06	68.2	-17.14	PK
Vertical	4739.075	59.20	-20.12	39.08	54	-14.92	AV
Vertical	10620.068	63.50	-8.97	54.53	68.2	-13.67	PK
Vertical	10620.068	49.43	-8.97	40.46	54	-13.54	AV
Vertical	15930.180	63.65	-7.72	55.93	74	-18.07	PK
Vertical	15930.180	49.86	-7.72	42.14	54	-11.86	AV
Horizontal	4739.130	74.98	-20.12	54.86	68.2	-13.34	PK
Horizontal	4739.130	59.28	-20.12	39.16	54	-14.84	AV
Horizontal	10620.108	61.02	-8.97	52.05	68.2	-16.15	PK
Horizontal	10620.108	49.37	-8.97	40.40	54	-13.60	AV
Horizontal	15930.191	60.52	-7.72	52.80	74	-21.20	PK
Horizontal	15930.191	49.25	-7.72	41.53	54	-12.47	AV

Note: PK value is lower than the Average value limit, So average didn't record.
The 26.5-40G amplitude of spurious emissions that are attenuated by more than 20dB below the permissible value has no need to be reported.
Emission level (dBuV/m) = 20 log Emission level (uV/m).
Corrected Reading: Antenna Factor + Cable Loss + Read Level - Preamp Factor = Level.
Test Mode is MIMO Mode.

Test Mode:	TX(5.3G) - 802.11be 80

Polar	Frequency	Reading Level	Correct Factor	Measure-ment	Limits	Over	Detector Type
(H/V)	(MHz)	(dBuV/m)	(dB)	(dBuV/m)	(dBuV/m)	(dB)	
Low Channel (5290 MHz)-Above 1G							
Vertical	4434.169	74.79	-20.73	54.06	68.2	-14.14	PK
Vertical	4434.169	59.18	-20.73	38.45	54	-15.55	AV
Vertical	10580.177	61.95	-9.03	52.92	68.2	-15.28	PK
Vertical	10580.177	49.49	-9.03	40.46	54	-13.54	AV
Vertical	15870.052	64.26	-7.74	56.52	74	-17.48	PK
Vertical	15870.052	49.23	-7.74	41.49	54	-12.51	AV
Horizontal	4434.071	70.23	-20.73	49.50	68.2	-18.70	PK
Horizontal	4434.071	59.04	-20.73	38.31	54	-15.69	AV
Horizontal	10580.033	61.29	-9.03	52.26	68.2	-15.94	PK
Horizontal	10580.033	49.67	-9.03	40.64	54	-13.36	AV
Horizontal	15870.098	60.54	-7.74	52.80	74	-21.20	PK
Horizontal	15870.098	49.08	-7.74	41.34	54	-12.66	AV

Note: PK value is lower than the Average value limit, So average didn't record.
The 26.5-40G amplitude of spurious emissions that are attenuated by more than 20dB below the permissible value has no need to be reported.
Emission level (dBuV/m) = 20 log Emission level (uV/m).
Corrected Reading: Antenna Factor + Cable Loss + Read Level - Preamp Factor = Level.
Test Mode is MIMO Mode.

Test Mode:	TX(5.6G) - 802.11a

Polar	Fre-quency	Reading Level	Correct Factor	Measure-ment	Limits	Over	Detector Type
(H/V)	(MHz)	(dBuV/m)	(dB)	(dBuV/m)	(dBuV/m)	(dB)	
Low Channel (5500 MHz)-Above 1G							
Vertical	4434.024	71.24	-20.73	50.51	68.2	-17.69	PK
Vertical	4434.024	59.81	-20.73	39.07	54	-14.93	AV
Vertical	11000.178	61.26	-8.40	52.86	68.2	-15.34	PK
Vertical	11000.178	49.88	-8.40	41.48	54	-12.52	AV
Vertical	16500.069	62.95	-6.09	56.86	74	-17.14	PK
Vertical	16500.069	49.46	-6.09	43.37	54	-10.63	AV
Horizontal	4434.022	74.99	-20.73	54.26	68.2	-13.94	PK
Horizontal	4434.022	59.53	-20.73	38.80	54	-15.20	AV
Horizontal	11000.126	62.56	-8.40	54.16	68.2	-14.04	PK
Horizontal	11000.126	49.94	-8.40	41.54	54	-12.46	AV
Horizontal	16500.078	64.08	-6.09	57.99	74	-16.01	PK
Horizontal	16500.078	49.42	-6.09	43.33	54	-10.67	AV
middle Channel (5580 MHz)-Above 1G							
Vertical	4592.043	74.98	-20.42	54.56	74	-19.44	PK
Vertical	4592.043	59.31	-20.42	38.90	54	-15.10	AV
Vertical	11160.110	64.31	-8.53	55.78	68.2	-12.42	PK
Vertical	11160.110	49.21	-8.53	40.68	54	-13.32	AV
Vertical	16740.187	61.52	-5.31	56.21	74	-17.79	PK
Vertical	16740.187	49.22	-5.31	43.91	54	-10.09	AV
Horizontal	4592.193	70.06	-20.42	49.64	74	-24.36	PK
Horizontal	4592.193	59.94	-20.42	39.52	54	-14.48	AV
Horizontal	11160.159	63.43	-8.53	54.90	68.2	-13.30	PK
Horizontal	11160.159	49.08	-8.53	40.55	54	-13.45	AV
Horizontal	16740.095	61.12	-5.31	55.81	74	-18.19	PK
Horizontal	16740.095	49.09	-5.31	43.78	54	-10.22	AV
High Channel (5700 MHz)-Above 1G							
Vertical	4739.106	72.40	-20.12	52.28	74	-21.72	PK
Vertical	4739.106	59.07	-20.12	38.95	54	-15.05	AV
Vertical	11400.109	61.68	-8.72	52.96	68.2	-15.24	PK
Vertical	11400.109	49.24	-8.72	40.52	54	-13.48	AV
Vertical	17100.186	61.31	-3.92	57.39	74	-16.61	PK
Vertical	17100.186	49.21	-3.92	45.29	54	-8.71	AV
Horizontal	4739.018	71.02	-20.12	50.90	74	-23.10	PK
Horizontal	4739.018	59.92	-20.12	39.80	54	-14.20	AV
Horizontal	11400.042	64.62	-8.72	55.90	68.2	-12.30	PK
Horizontal	11400.042	49.90	-8.72	41.18	54	-12.82	AV
Horizontal	17100.197	62.53	-3.92	58.61	74	-15.39	PK
Horizontal	17100.197	49.88	-3.92	45.96	54	-8.04	AV

Note: PK value is lower than the Average value limit, So average didn't record.
The 26.5-40G amplitude of spurious emissions that are attenuated by more than 20dB below the permissible value has no need to be reported.
Emission level (dBuV/m) = 20 log Emission level (uV/m).
Corrected Reading: Antenna Factor + Cable Loss + Read Level - Preamp Factor = Level.
The worst case is Antenna A.

Test Mode:	TX(5.6G) - 802.11n-HT20

Polar (H/V)	Fre-quency (MHz)	Reading Level (dBuV/m)	Correct Factor (dB)	Measure-ment (dBuV/m)	Limits (dBuV/m)	Over (dB)	Detector Type
Low Channel (5500 MHz)-Above 1G							
Vertical	4434.003	74.41	-20.73	53.68	68.2	-14.52	PK
Vertical	4434.003	59.90	-20.73	39.16	54	-14.84	AV
Vertical	11000.100	60.23	-8.40	51.83	68.2	-16.37	PK
Vertical	11000.100	49.95	-8.40	41.55	54	-12.45	AV
Vertical	16500.006	60.15	-6.09	54.06	74	-19.94	PK
Vertical	16500.006	49.32	-6.09	43.23	54	-10.77	AV
Horizontal	4434.056	72.26	-20.73	51.53	68.2	-16.67	PK
Horizontal	4434.056	59.54	-20.73	38.81	54	-15.19	AV
Horizontal	11000.162	60.83	-8.40	52.43	68.2	-15.77	PK
Horizontal	11000.162	49.97	-8.40	41.57	54	-12.43	AV
Horizontal	16500.197	64.28	-6.09	58.19	74	-15.81	PK
Horizontal	16500.197	49.78	-6.09	43.69	54	-10.31	AV
middle Channel (5580 MHz)-Above 1G							
Vertical	4592.018	70.88	-20.42	50.47	74	-23.53	PK
Vertical	4592.018	59.91	-20.42	39.49	54	-14.51	AV
Vertical	11160.108	62.84	-8.53	54.31	68.2	-13.89	PK
Vertical	11160.108	49.70	-8.53	41.17	54	-12.83	AV
Vertical	16740.165	62.65	-5.31	57.34	74	-16.66	PK
Vertical	16740.165	49.15	-5.31	43.84	54	-10.16	AV
Horizontal	4592.158	73.21	-20.42	52.79	74	-21.21	PK
Horizontal	4592.158	59.60	-20.42	39.18	54	-14.82	AV
Horizontal	11160.087	61.62	-8.53	53.09	68.2	-15.11	PK
Horizontal	11160.087	49.05	-8.53	40.52	54	-13.48	AV
Horizontal	16740.018	60.42	-5.31	55.11	74	-18.89	PK
Horizontal	16740.018	49.49	-5.31	44.18	54	-9.82	AV
High Channel (5700 MHz)-Above 1G							
Vertical	4739.008	70.22	-20.12	50.10	74	-23.90	PK
Vertical	4739.008	59.86	-20.12	39.74	54	-14.26	AV
Vertical	11400.038	62.02	-8.72	53.30	68.2	-14.90	PK
Vertical	11400.038	49.67	-8.72	40.95	54	-13.05	AV
Vertical	17100.137	60.90	-3.92	56.98	74	-17.02	PK
Vertical	17100.137	49.22	-3.92	45.30	54	-8.70	AV
Horizontal	4739.016	73.24	-20.12	53.12	74	-20.88	PK
Horizontal	4739.016	59.84	-20.12	39.71	54	-14.29	AV
Horizontal	11400.093	63.14	-8.72	54.42	68.2	-13.78	PK
Horizontal	11400.093	49.94	-8.72	41.22	54	-12.78	AV
Horizontal	17100.086	64.31	-3.92	60.39	74	-13.61	PK
Horizontal	17100.086	49.54	-3.92	45.62	54	-8.38	AV

Note: PK value is lower than the Average value limit, So average didn't record.
The 26.5-40G amplitude of spurious emissions that are attenuated by more than 20dB below the permissible value has no need to be reported.
Emission level (dBuV/m) = 20 log Emission level (uV/m).
Corrected Reading: Antenna Factor + Cable Loss + Read Level - Preamp Factor = Level.
Test Mode is MIMO Mode.

Test Mode:	TX(5.6G) - 802.11n-HT40

Polar (H/V)	Fre-quency (MHz)	Reading Level (dBuV/m)	Correct Factor (dB)	Measure-ment (dBuV/m)	Limits (dBuV/m)	Over (dB)	Detector Type
Low Channel (5510 MHz)-Above 1G							
Vertical	4434.135	64.81	-20.73	44.08	68.2	-24.12	PK
Vertical	4434.135	43.44	-20.73	22.71	54	-31.29	AV
Vertical	11020.138	62.49	-8.42	54.07	68.2	-14.13	PK
Vertical	11020.138	43.48	-8.42	35.06	54	-18.94	AV
Vertical	16530.148	60.42	-5.99	54.43	74	-19.57	PK
Vertical	16530.148	43.21	-5.99	37.22	54	-16.78	AV
Horizontal	4434.085	60.34	-20.73	39.61	74	-34.39	PK
Horizontal	4434.085	43.04	-20.73	22.31	54	-31.69	AV
Horizontal	11020.186	50.60	-8.42	42.18	68.2	-26.02	PK
Horizontal	11020.186	41.28	-8.42	32.86	54	-21.14	AV
Horizontal	16530.103	52.53	-5.99	46.54	74	-27.46	PK
Horizontal	16530.103	42.54	-5.99	36.55	54	-17.45	AV
middle Channel (5550 MHz)-Above 1G							
Vertical	4592.131	64.53	-20.42	44.12	74	-29.88	PK
Vertical	4592.131	43.24	-20.42	22.82	54	-31.18	AV
Vertical	11100.049	64.77	-8.40	56.37	68.2	-11.83	PK
Vertical	11100.049	43.11	-8.40	34.71	54	-19.29	AV
Vertical	16650.100	63.00	-5.60	57.40	74	-16.60	PK
Vertical	16650.100	43.47	-5.60	37.87	54	-16.13	AV
Horizontal	4592.067	62.11	-20.42	41.70	74	-32.30	PK
Horizontal	4592.067	43.27	-20.42	22.85	54	-31.15	AV
Horizontal	11100.052	52.49	-8.40	44.09	68.2	-24.11	PK
Horizontal	11100.052	40.14	-8.40	31.74	54	-22.26	AV
Horizontal	16650.128	54.09	-5.60	48.49	74	-25.51	PK
Horizontal	16650.128	44.99	-5.60	39.39	54	-14.61	AV
High Channel (5670 MHz)-Above 1G							
Vertical	4739.197	64.51	-20.12	44.39	68.2	-23.81	PK
Vertical	4739.197	43.99	-20.12	23.86	54	-30.14	AV
Vertical	11340.104	62.09	-8.67	53.42	68.2	-14.78	PK
Vertical	11340.104	43.60	-8.67	34.93	54	-19.07	AV
Vertical	17010.125	60.71	-4.41	56.30	74	-17.70	PK
Vertical	17010.125	43.14	-4.41	38.73	54	-15.27	AV
Horizontal	4739.062	62.79	-20.12	42.67	68.2	-25.53	PK
Horizontal	4739.062	43.56	-20.12	23.44	54	-30.56	AV
Horizontal	11340.152	53.80	-8.67	45.13	68.2	-23.07	PK
Horizontal	11340.152	44.98	-8.67	36.31	54	-17.69	AV
Horizontal	17010.199	50.77	-4.41	46.36	74	-27.64	PK
Horizontal	17010.199	40.03	-4.41	35.62	54	-18.38	AV

Note: PK value is lower than the Average value limit, So average didn't record.
The 26.5-40G amplitude of spurious emissions that are attenuated by more than 20dB below the permissible value has no need to be reported.
Emission level (dBuV/m) = 20 log Emission level (uV/m).
Corrected Reading: Antenna Factor + Cable Loss + Read Level - Preamp Factor = Level.
Test Mode is MIMO Mode.

Test Mode:	TX(5.6G) - 802.11ac-HT20

Polar (H/V)	Fre-quency (MHz)	Reading Level (dBuV/m)	Correct Factor (dB)	Measure-ment (dBuV/m)	Limits (dBuV/m)	Over (dB)	Detector Type
Low Channel (5500 MHz)-Above 1G							
Vertical	4434.094	73.36	-20.73	52.63	68.2	-15.57	PK
Vertical	4434.094	59.32	-20.73	38.59	54	-15.41	AV
Vertical	11000.092	64.05	-8.40	55.65	68.2	-12.55	PK
Vertical	11000.092	49.18	-8.40	40.78	54	-13.22	AV
Vertical	16500.174	61.12	-6.09	55.03	74	-18.97	PK
Vertical	16500.174	49.48	-6.09	43.39	54	-10.61	AV
Horizontal	4434.174	73.90	-20.73	53.17	68.2	-15.03	PK
Horizontal	4434.174	59.73	-20.73	39.00	54	-15.00	AV
Horizontal	11000.073	63.01	-8.40	54.61	68.2	-13.59	PK
Horizontal	11000.073	49.78	-8.40	41.38	54	-12.62	AV
Horizontal	16500.130	64.47	-6.09	58.38	74	-15.62	PK
Horizontal	16500.130	49.66	-6.09	43.57	54	-10.43	AV
middle Channel (5580 MHz)-Above 1G							
Vertical	4592.131	73.64	-20.42	53.22	74	-20.78	PK
Vertical	4592.131	59.49	-20.42	39.07	54	-14.93	AV
Vertical	11160.131	64.98	-8.53	56.45	68.2	-11.75	PK
Vertical	11160.131	49.95	-8.53	41.42	54	-12.58	AV
Vertical	16740.122	62.08	-5.31	56.77	74	-17.23	PK
Vertical	16740.122	49.47	-5.31	44.16	54	-9.84	AV
Horizontal	4592.167	70.97	-20.42	50.55	74	-23.45	PK
Horizontal	4592.167	59.55	-20.42	39.14	54	-14.86	AV
Horizontal	11160.079	61.31	-8.53	52.78	68.2	-15.42	PK
Horizontal	11160.079	49.94	-8.53	41.41	54	-12.59	AV
Horizontal	16740.045	62.38	-5.31	57.07	74	-16.93	PK
Horizontal	16740.045	49.43	-5.31	44.12	54	-9.88	AV
High Channel (5700 MHz)-Above 1G							
Vertical	4739.109	71.53	-20.12	51.41	74	-22.59	PK
Vertical	4739.109	59.74	-20.12	39.62	54	-14.38	AV
Vertical	11400.131	62.16	-8.72	53.44	68.2	-14.76	PK
Vertical	11400.131	49.48	-8.72	40.76	54	-13.24	AV
Vertical	17100.091	63.09	-3.92	59.17	74	-14.83	PK
Vertical	17100.091	49.21	-3.92	45.29	54	-8.71	AV
Horizontal	4739.129	70.13	-20.12	50.01	74	-23.99	PK
Horizontal	4739.129	59.66	-20.12	39.54	54	-14.46	AV
Horizontal	11400.187	63.12	-8.72	54.40	68.2	-13.80	PK
Horizontal	11400.187	49.84	-8.72	41.12	54	-12.88	AV
Horizontal	17100.169	60.57	-3.92	56.65	74	-17.35	PK
Horizontal	17100.169	49.45	-3.92	45.53	54	-8.47	AV

Note: PK value is lower than the Average value limit, So average didn't record.
The 26.5-40G amplitude of spurious emissions that are attenuated by more than 20dB below the permissible value has no need to be reported.
Emission level (dBuV/m) = 20 log Emission level (uV/m).
Corrected Reading: Antenna Factor + Cable Loss + Read Level - Preamp Factor = Level.
Test Mode is MIMO Mode.

Test Mode:	TX(5.6G) - 802.11ac-HT40

Polar (H/V)	Fre-quency (MHz)	Reading Level (dBuV/m)	Correct Factor (dB)	Measure-ment (dBuV/m)	Limits (dBuV/m)	Over (dB)	Detector Type
Low Channel (5510 MHz)-Above 1G							
Vertical	4434.058	60.13	-20.73	39.40	68.2	-28.80	PK
Vertical	4434.058	43.22	-20.73	22.49	54	-31.51	AV
Vertical	11020.106	63.25	-8.42	54.83	68.2	-13.37	PK
Vertical	11020.106	43.56	-8.42	35.14	54	-18.86	AV
Vertical	16530.024	60.59	-5.99	54.60	74	-19.40	PK
Vertical	16530.024	44.00	-5.99	38.01	54	-15.99	AV
Horizontal	4434.106	62.30	-20.73	41.57	74	-32.43	PK
Horizontal	4434.106	43.96	-20.73	23.23	54	-30.77	AV
Horizontal	11020.145	51.25	-8.42	42.83	68.2	-25.37	PK
Horizontal	11020.145	44.42	-8.42	36.00	54	-18.00	AV
Horizontal	16530.124	54.28	-5.99	48.29	74	-25.71	PK
Horizontal	16530.124	44.41	-5.99	38.42	54	-15.58	AV
middle Channel (5550 MHz)-Above 1G							
Vertical	4592.053	63.32	-20.42	42.90	74	-31.10	PK
Vertical	4592.053	43.37	-20.42	22.96	54	-31.04	AV
Vertical	11100.180	63.25	-8.40	54.85	68.2	-13.35	PK
Vertical	11100.180	43.33	-8.40	34.93	54	-19.07	AV
Vertical	16650.161	62.64	-5.60	57.04	74	-16.96	PK
Vertical	16650.161	43.78	-5.60	38.18	54	-15.82	AV
Horizontal	4592.168	64.84	-20.42	44.42	74	-29.58	PK
Horizontal	4592.168	43.13	-20.42	22.71	54	-31.29	AV
Horizontal	11100.102	50.09	-8.40	41.69	68.2	-26.51	PK
Horizontal	11100.102	43.24	-8.40	34.84	54	-19.16	AV
Horizontal	16650.007	51.57	-5.60	45.97	74	-28.03	PK
Horizontal	16650.007	40.83	-5.60	35.23	54	-18.77	AV
High Channel (5670 MHz)-Above 1G							
Vertical	4739.027	62.33	-20.12	42.20	68.2	-26.00	PK
Vertical	4739.027	43.98	-20.12	23.86	54	-30.14	AV
Vertical	11340.015	60.96	-8.67	52.29	68.2	-15.91	PK
Vertical	11340.015	43.26	-8.67	34.59	54	-19.41	AV
Vertical	17010.108	60.11	-4.41	55.70	74	-18.30	PK
Vertical	17010.108	43.24	-4.41	38.83	54	-15.17	AV
Horizontal	4739.086	62.60	-20.12	42.48	68.2	-25.72	PK
Horizontal	4739.086	43.19	-20.12	23.07	54	-30.93	AV
Horizontal	11340.122	53.13	-8.67	44.46	68.2	-23.74	PK
Horizontal	11340.122	43.52	-8.67	34.85	54	-19.15	AV
Horizontal	17010.145	52.22	-4.41	47.81	74	-26.19	PK
Horizontal	17010.145	43.22	-4.41	38.81	54	-15.19	AV

Note: PK value is lower than the Average value limit, So average didn't record.
The 26.5-40G amplitude of spurious emissions that are attenuated by more than 20dB below the permissible value has no need to be reported.
Emission level (dBuV/m) = 20 log Emission level (uV/m).
Corrected Reading: Antenna Factor + Cable Loss + Read Level - Preamp Factor = Level.
Test Mode is MIMO Mode.

Test Mode:	TX(5.6G) - 802.11ac-HT80

Polar	Fre-quency	Reading Level	Correct Factor	Measure-ment	Limits	Over	Detector Type
(H/V)	(MHz)	(dBuV/m)	(dB)	(dBuV/m)	(dBuV/m)	(dB)	
(5530 MHz)-Above 1G							
Vertical	4434.114	62.70	-20.73	41.97	68.2	-26.23	PK
Vertical	4434.114	43.14	-20.73	22.41	54	-31.59	AV
Vertical	11060.047	63.96	-8.45	55.51	68.2	-12.69	PK
Vertical	11060.047	43.46	-8.45	35.01	54	-18.99	AV
Vertical	16590.016	62.58	-5.79	56.79	74	-17.21	PK
Vertical	16590.016	43.25	-5.79	37.46	54	-16.54	AV
Horizontal	4434.022	64.12	-20.73	43.39	68.2	-24.81	PK
Horizontal	4434.022	43.09	-20.73	22.36	54	-31.64	AV
Horizontal	11060.161	52.19	-8.45	43.74	68.2	-24.46	PK
Horizontal	11060.161	40.14	-8.45	31.69	54	-22.31	AV
Horizontal	16590.036	51.93	-5.79	46.14	74	-27.86	PK
Horizontal	16590.036	42.24	-5.79	36.45	54	-17.55	AV

Note: PK value is lower than the Average value limit, So average didn't record.
The 26.5-40G amplitude of spurious emissions that are attenuated by more than 20dB below the permissible value has no need to be reported.
Emission level (dBuV/m) = 20 log Emission level (uV/m).
Corrected Reading: Antenna Factor + Cable Loss + Read Level - Preamp Factor = Level.
Test Mode is MIMO Mode.

Test Mode:	TX(5.6G) - 802.11ax-HT20

Polar (H/V)	Fre-quency (MHz)	Reading Level (dBuV/m)	Correct Factor (dB)	Measure-ment (dBuV/m)	Limits (dBuV/m)	Over (dB)	Detector Type
Low Channel (5500 MHz)-Above 1G							
Vertical	4434.153	71.07	-20.73	50.33	68.2	-17.87	PK
Vertical	4434.153	59.42	-20.73	38.69	54	-15.31	AV
Vertical	11000.007	63.38	-8.40	54.98	68.2	-13.22	PK
Vertical	11000.007	49.23	-8.40	40.83	54	-13.17	AV
Vertical	16500.140	61.68	-6.09	55.59	74	-18.41	PK
Vertical	16500.140	49.82	-6.09	43.73	54	-10.27	AV
Horizontal	4434.196	73.00	-20.73	52.27	68.2	-15.93	PK
Horizontal	4434.196	59.50	-20.73	38.77	54	-15.23	AV
Horizontal	11000.181	60.15	-8.40	51.75	68.2	-16.45	PK
Horizontal	11000.181	49.37	-8.40	40.97	54	-13.03	AV
Horizontal	16500.024	63.24	-6.09	57.15	74	-16.85	PK
Horizontal	16500.024	49.03	-6.09	42.94	54	-11.06	AV
middle Channel (5580 MHz)-Above 1G							
Vertical	4592.190	74.37	-20.42	53.96	74	-20.04	PK
Vertical	4592.190	59.60	-20.42	39.18	54	-14.82	AV
Vertical	11160.101	62.06	-8.53	53.53	68.2	-14.67	PK
Vertical	11160.101	49.74	-8.53	41.21	54	-12.79	AV
Vertical	16740.039	61.36	-5.31	56.05	74	-17.95	PK
Vertical	16740.039	49.06	-5.31	43.75	54	-10.25	AV
Horizontal	4592.171	70.16	-20.42	49.75	74	-24.25	PK
Horizontal	4592.171	59.48	-20.42	39.07	54	-14.93	AV
Horizontal	11160.186	63.97	-8.53	55.44	68.2	-12.76	PK
Horizontal	11160.186	49.89	-8.53	41.36	54	-12.64	AV
Horizontal	16740.028	64.86	-5.31	59.55	74	-14.45	PK
Horizontal	16740.028	49.02	-5.31	43.71	54	-10.29	AV
High Channel (5700 MHz)-Above 1G							
Vertical	4739.133	74.96	-20.12	54.84	74	-19.16	PK
Vertical	4739.133	59.24	-20.12	39.12	54	-14.88	AV
Vertical	11400.110	63.38	-8.72	54.66	68.2	-13.54	PK
Vertical	11400.110	49.16	-8.72	40.44	54	-13.56	AV
Vertical	17100.195	62.17	-3.92	58.25	74	-15.75	PK
Vertical	17100.195	49.76	-3.92	45.84	54	-8.16	AV
Horizontal	4739.188	74.18	-20.12	54.05	74	-19.95	PK
Horizontal	4739.188	59.93	-20.12	39.81	54	-14.19	AV
Horizontal	11400.091	61.48	-8.72	52.76	68.2	-15.44	PK
Horizontal	11400.091	49.51	-8.72	40.79	54	-13.21	AV
Horizontal	17100.008	64.77	-3.92	60.85	74	-13.15	PK
Horizontal	17100.008	49.44	-3.92	45.52	54	-8.48	AV

Note: PK value is lower than the Average value limit, So average didn't record.
The 26.5-40G amplitude of spurious emissions that are attenuated by more than 20dB below the permissible value has no need to be reported.
Emission level (dBuV/m) = 20 log Emission level (uV/m).
Corrected Reading: Antenna Factor + Cable Loss + Read Level - Preamp Factor = Level.
Test Mode is MIMO Mode.

Test Mode:	TX(5.6G) - 802.11ax-HT40

Polar (H/V)	Fre-quency (MHz)	Reading Level (dBuV/m)	Correct Factor (dB)	Measure-ment (dBuV/m)	Limits (dBuV/m)	Over (dB)	Detector Type
Low Channel (5510 MHz)-Above 1G							
Vertical	4434.180	61.95	-20.73	41.22	68.2	-26.98	PK
Vertical	4434.180	43.14	-20.73	22.41	54	-31.59	AV
Vertical	11020.051	61.63	-8.42	53.21	68.2	-14.99	PK
Vertical	11020.051	43.06	-8.42	34.64	54	-19.36	AV
Vertical	16530.187	64.33	-5.99	58.34	74	-15.66	PK
Vertical	16530.187	43.34	-5.99	37.35	54	-16.65	AV
Horizontal	4434.090	61.97	-20.73	41.24	74	-32.76	PK
Horizontal	4434.090	43.56	-20.73	22.83	54	-31.17	AV
Horizontal	11020.082	52.25	-8.42	43.83	68.2	-24.37	PK
Horizontal	11020.082	40.50	-8.42	32.08	54	-21.92	AV
Horizontal	16530.120	51.19	-5.99	45.20	74	-28.80	PK
Horizontal	16530.120	41.36	-5.99	35.37	54	-18.63	AV
middle Channel (5550 MHz)-Above 1G							
Vertical	4592.056	63.90	-20.42	43.49	74	-30.51	PK
Vertical	4592.056	43.75	-20.42	23.33	54	-30.67	AV
Vertical	11100.112	61.53	-8.40	53.13	68.2	-15.07	PK
Vertical	11100.112	43.67	-8.40	35.27	54	-18.73	AV
Vertical	16650.135	64.20	-5.60	58.60	74	-15.40	PK
Vertical	16650.135	43.95	-5.60	38.35	54	-15.65	AV
Horizontal	4592.143	61.12	-20.42	40.70	74	-33.30	PK
Horizontal	4592.143	43.74	-20.42	23.33	54	-30.67	AV
Horizontal	11100.197	50.46	-8.40	42.06	68.2	-26.14	PK
Horizontal	11100.197	41.73	-8.40	33.33	54	-20.67	AV
Horizontal	16650.028	52.69	-5.60	47.09	74	-26.91	PK
Horizontal	16650.028	43.49	-5.60	37.89	54	-16.11	AV
High Channel (5670 MHz)-Above 1G							
Vertical	4739.096	64.22	-20.12	44.10	68.2	-24.10	PK
Vertical	4739.096	43.49	-20.12	23.37	54	-30.63	AV
Vertical	11340.151	63.37	-8.67	54.70	68.2	-13.50	PK
Vertical	11340.151	43.29	-8.67	34.62	54	-19.38	AV
Vertical	17010.173	61.23	-4.41	56.82	74	-17.18	PK
Vertical	17010.173	43.48	-4.41	39.07	54	-14.93	AV
Horizontal	4739.100	61.68	-20.12	41.56	68.2	-26.64	PK
Horizontal	4739.100	43.46	-20.12	23.34	54	-30.66	AV
Horizontal	11340.129	54.74	-8.67	46.07	68.2	-22.13	PK
Horizontal	11340.129	43.44	-8.67	34.77	54	-19.23	AV
Horizontal	17010.097	52.78	-4.41	48.37	74	-25.63	PK
Horizontal	17010.097	41.45	-4.41	37.04	54	-16.96	AV

Note: PK value is lower than the Average value limit, So average didn't record.
The 26.5-40G amplitude of spurious emissions that are attenuated by more than 20dB below the permissible value has no need to be reported.
Emission level (dBuV/m) = 20 log Emission level (uV/m).
Corrected Reading: Antenna Factor + Cable Loss + Read Level - Preamp Factor = Level.
Test Mode is MIMO Mode.

Test Mode:	TX(5.6G) - 802.11ax-HT80

Polar	Fre-quency	Reading Level	Correct Factor	Measure-ment	Limits	Over	Detector Type
(H/V)	(MHz)	(dBuV/m)	(dB)	(dBuV/m)	(dBuV/m)	(dB)	
(5530 MHz)-Above 1G							
Vertical	4434.086	63.87	-20.73	43.14	68.2	-25.06	PK
Vertical	4434.086	43.03	-20.73	22.30	54	-31.70	AV
Vertical	11060.005	62.61	-8.45	54.16	68.2	-14.04	PK
Vertical	11060.005	43.42	-8.45	34.97	54	-19.03	AV
Vertical	16590.066	61.72	-5.79	55.93	74	-18.07	PK
Vertical	16590.066	43.57	-5.79	37.78	54	-16.22	AV
Horizontal	4434.064	63.22	-20.73	42.49	68.2	-25.71	PK
Horizontal	4434.064	43.16	-20.73	22.43	54	-31.57	AV
Horizontal	11060.086	53.80	-8.45	45.35	68.2	-22.85	PK
Horizontal	11060.086	44.88	-8.45	36.43	54	-17.57	AV
Horizontal	16590.134	52.91	-5.79	47.12	74	-26.88	PK
Horizontal	16590.134	41.55	-5.79	35.76	54	-18.24	AV

Note: PK value is lower than the Average value limit, So average didn't record.
The 26.5-40G amplitude of spurious emissions that are attenuated by more than 20dB below the permissible value has no need to be reported.
Emission level (dBuV/m) = 20 log Emission level (uV/m).
Corrected Reading: Antenna Factor + Cable Loss + Read Level - Preamp Factor = Level.
Test Mode is MIMO Mode.

Test Mode:	TX(5.6G) - 802.11be-HT20

Polar (H/V)	Fre-quency (MHz)	Reading Level (dBuV/m)	Correct Factor (dB)	Measure-ment (dBuV/m)	Limits (dBuV/m)	Over (dB)	Detector Type
Low Channel (5500 MHz)-Above 1G							
Vertical	4434.141	72.26	-20.73	51.53	68.2	-16.67	PK
Vertical	4434.141	59.03	-20.73	38.30	54	-15.70	AV
Vertical	11000.073	60.09	-8.40	51.69	68.2	-16.51	PK
Vertical	11000.073	49.87	-8.40	41.47	54	-12.53	AV
Vertical	16500.151	60.68	-6.09	54.59	74	-19.41	PK
Vertical	16500.151	49.46	-6.09	43.37	54	-10.63	AV
Horizontal	4434.090	72.51	-20.73	51.78	68.2	-16.42	PK
Horizontal	4434.090	59.82	-20.73	39.09	54	-14.91	AV
Horizontal	11000.129	64.52	-8.40	56.12	68.2	-12.08	PK
Horizontal	11000.129	49.25	-8.40	40.85	54	-13.15	AV
Horizontal	16500.034	63.30	-6.09	57.21	74	-16.79	PK
Horizontal	16500.034	49.52	-6.09	43.43	54	-10.57	AV
middle Channel (5580 MHz)-Above 1G							
Vertical	4592.182	74.18	-20.42	53.76	74	-20.24	PK
Vertical	4592.182	59.06	-20.42	38.64	54	-15.36	AV
Vertical	11160.088	62.17	-8.53	53.64	68.2	-14.56	PK
Vertical	11160.088	49.72	-8.53	41.19	54	-12.81	AV
Vertical	16740.061	63.84	-5.31	58.53	74	-15.47	PK
Vertical	16740.061	49.94	-5.31	44.63	54	-9.37	AV
Horizontal	4592.124	71.77	-20.42	51.35	74	-22.65	PK
Horizontal	4592.124	59.79	-20.42	39.37	54	-14.63	AV
Horizontal	11160.171	61.61	-8.53	53.08	68.2	-15.12	PK
Horizontal	11160.171	49.21	-8.53	40.68	54	-13.32	AV
Horizontal	16740.049	64.78	-5.31	59.47	74	-14.53	PK
Horizontal	16740.049	49.74	-5.31	44.43	54	-9.57	AV
High Channel (5700 MHz)-Above 1G							
Vertical	4739.157	71.60	-20.12	51.47	74	-22.53	PK
Vertical	4739.157	59.41	-20.12	39.29	54	-14.71	AV
Vertical	11400.114	64.79	-8.72	56.07	68.2	-12.13	PK
Vertical	11400.114	49.47	-8.72	40.75	54	-13.25	AV
Vertical	17100.031	64.63	-3.92	60.71	74	-13.29	PK
Vertical	17100.031	49.34	-3.92	45.42	54	-8.58	AV
Horizontal	4739.007	74.04	-20.12	53.92	74	-20.08	PK
Horizontal	4739.007	60.00	-20.12	39.87	54	-14.13	AV
Horizontal	11400.100	62.58	-8.72	53.86	68.2	-14.34	PK
Horizontal	11400.100	49.91	-8.72	41.19	54	-12.81	AV
Horizontal	17100.180	60.32	-3.92	56.40	74	-17.60	PK
Horizontal	17100.180	49.81	-3.92	45.89	54	-8.11	AV

Note: PK value is lower than the Average value limit, So average didn't record.
The 26.5-40G amplitude of spurious emissions that are attenuated by more than 20dB below the permissible value has no need to be reported.
Emission level (dBuV/m) = 20 log Emission level (uV/m).
Corrected Reading: Antenna Factor + Cable Loss + Read Level - Preamp Factor = Level.
Test Mode is MIMO Mode.

Test Mode:	TX(5.6G) - 802.11be-HT40

Polar (H/V)	Fre-quency (MHz)	Reading Level (dBuV/m)	Correct Factor (dB)	Measure-ment (dBuV/m)	Limits (dBuV/m)	Over (dB)	Detector Type
Low Channel (5510 MHz)-Above 1G							
Vertical	4434.151	60.05	-20.73	39.32	68.2	-28.88	PK
Vertical	4434.151	43.21	-20.73	22.48	54	-31.52	AV
Vertical	11020.120	63.04	-8.42	54.62	68.2	-13.58	PK
Vertical	11020.120	43.94	-8.42	35.52	54	-18.48	AV
Vertical	16530.058	63.25	-5.99	57.26	74	-16.74	PK
Vertical	16530.058	43.44	-5.99	37.45	54	-16.55	AV
Horizontal	4434.115	60.85	-20.73	40.12	74	-33.88	PK
Horizontal	4434.115	43.37	-20.73	22.64	54	-31.36	AV
Horizontal	11020.162	51.08	-8.42	42.66	68.2	-25.54	PK
Horizontal	11020.162	42.84	-8.42	34.42	54	-19.58	AV
Horizontal	16530.118	54.95	-5.99	48.96	74	-25.04	PK
Horizontal	16530.118	40.14	-5.99	34.15	54	-19.85	AV
middle Channel (5550 MHz)-Above 1G							
Vertical	4592.017	61.54	-20.42	41.13	74	-32.87	PK
Vertical	4592.017	43.62	-20.42	23.20	54	-30.80	AV
Vertical	11100.041	60.12	-8.40	51.72	68.2	-16.48	PK
Vertical	11100.041	43.42	-8.40	35.02	54	-18.98	AV
Vertical	16650.067	64.96	-5.60	59.36	74	-14.64	PK
Vertical	16650.067	43.02	-5.60	37.42	54	-16.58	AV
Horizontal	4592.198	61.33	-20.42	40.91	74	-33.09	PK
Horizontal	4592.198	43.61	-20.42	23.19	54	-30.81	AV
Horizontal	11100.183	52.46	-8.40	44.06	68.2	-24.14	PK
Horizontal	11100.183	42.38	-8.40	33.98	54	-20.02	AV
Horizontal	16650.119	53.84	-5.60	48.24	74	-25.76	PK
Horizontal	16650.119	42.80	-5.60	37.20	54	-16.80	AV
High Channel (5670 MHz)-Above 1G							
Vertical	4739.163	64.61	-20.12	44.49	68.2	-23.71	PK
Vertical	4739.163	43.10	-20.12	22.98	54	-31.02	AV
Vertical	11340.179	61.47	-8.67	52.80	68.2	-15.40	PK
Vertical	11340.179	43.83	-8.67	35.16	54	-18.84	AV
Vertical	17010.183	62.78	-4.41	58.37	74	-15.63	PK
Vertical	17010.183	43.16	-4.41	38.75	54	-15.25	AV
Horizontal	4739.000	62.34	-20.12	42.22	68.2	-25.98	PK
Horizontal	4739.000	43.48	-20.12	23.36	54	-30.64	AV
Horizontal	11340.130	52.61	-8.67	43.94	68.2	-24.26	PK
Horizontal	11340.130	42.79	-8.67	34.12	54	-19.88	AV
Horizontal	17010.007	54.10	-4.41	49.69	74	-24.31	PK
Horizontal	17010.007	44.10	-4.41	39.69	54	-14.31	AV

Note: PK value is lower than the Average value limit, So average didn't record.
The 26.5-40G amplitude of spurious emissions that are attenuated by more than 20dB below the permissible value has no need to be reported.
Emission level (dBuV/m) = 20 log Emission level (uV/m).
Corrected Reading: Antenna Factor + Cable Loss + Read Level - Preamp Factor = Level.
Test Mode is MIMO Mode.

Test Mode:	TX(5.6G) - 802.11be-HT80

Polar	Fre-quency	Reading Level	Correct Factor	Measure-ment	Limits	Over	Detector Type
(H/V)	(MHz)	(dBuV/m)	(dB)	(dBuV/m)	(dBuV/m)	(dB)	
(5530 MHz)-Above 1G							
Vertical	4434.042	62.87	-20.73	42.14	68.2	-26.06	PK
Vertical	4434.042	43.65	-20.73	22.92	54	-31.08	AV
Vertical	11060.020	61.11	-8.45	52.66	68.2	-15.54	PK
Vertical	11060.020	43.75	-8.45	35.30	54	-18.70	AV
Vertical	16590.045	62.64	-5.79	56.85	74	-17.15	PK
Vertical	16590.045	43.18	-5.79	37.39	54	-16.61	AV
Horizontal	4434.092	60.55	-20.73	39.81	68.2	-28.39	PK
Horizontal	4434.092	43.31	-20.73	22.57	54	-31.43	AV
Horizontal	11060.107	50.04	-8.45	41.59	68.2	-26.61	PK
Horizontal	11060.107	42.93	-8.45	34.48	54	-19.52	AV
Horizontal	16590.047	54.30	-5.79	48.51	74	-25.49	PK
Horizontal	16590.047	42.54	-5.79	36.75	54	-17.25	AV

Note: PK value is lower than the Average value limit, So average didn't record.
The 26.5-40G amplitude of spurious emissions that are attenuated by more than 20dB below the permissible value has no need to be reported.
Emission level (dBuV/m) = 20 log Emission level (uV/m).
Corrected Reading: Antenna Factor + Cable Loss + Read Level - Preamp Factor = Level.
Test Mode is MIMO Mode.

Test Mode:	TX (5.8G) -- 802.11a

Polar	Frequency	Reading Level	Correct Factor	Measure-ment	Limits	Over	Detector Type
(H/V)	(MHz)	(dBuV/m)	(dB)	(dBuV/m)	(dBuV/m)	(dB)	
Low Channel (5745 MHz)-Above 1G							
Vertical	4679.165	71.08	-20.24	50.84	74	-23.16	PK
Vertical	4679.165	59.33	-20.24	39.08	54	-14.92	AV
Vertical	11490.039	62.70	-8.79	53.91	68.2	-14.29	PK
Vertical	11490.039	49.78	-8.79	40.99	54	-13.01	AV
Vertical	17235.057	57.10	-3.18	53.92	68.2	-14.28	PK
Vertical	17235.057	44.83	-3.18	41.65	54	-12.35	AV
Horizontal	4679.022	71.38	-20.73	50.65	74	-23.35	PK
Horizontal	4679.022	59.23	-20.73	38.50	54	-15.50	AV
Horizontal	11490.093	62.29	-8.79	53.50	68.2	-14.70	PK
Horizontal	11490.093	49.05	-8.79	40.26	54	-13.74	AV
Horizontal	17235.142	58.17	-3.18	54.99	68.2	-13.21	PK
Horizontal	17235.142	44.68	-3.18	41.50	54	-12.50	AV
Middle Channel (5785 MHz)-Above 1G							
Vertical	4592.196	73.29	-20.42	52.87	74	-21.13	PK
Vertical	4592.196	59.37	-20.42	38.96	54	-15.04	AV
Vertical	11570.147	61.46	-8.86	52.60	68.2	-15.60	PK
Vertical	11570.147	49.67	-8.86	40.81	54	-13.19	AV
Vertical	17355.164	56.47	-2.52	53.95	68.2	-14.25	PK
Vertical	17355.164	44.89	-2.52	42.37	54	-11.63	AV
Horizontal	4592.011	73.88	-20.42	53.47	74	-20.53	PK
Horizontal	4592.011	59.89	-20.42	39.48	54	-14.52	AV
Horizontal	11570.085	64.11	-8.86	55.25	68.2	-12.95	PK
Horizontal	11570.085	49.74	-8.86	40.88	54	-13.12	AV
Horizontal	17355.107	59.12	-2.52	56.60	68.2	-11.60	PK
Horizontal	17355.107	44.77	-2.52	42.25	54	-11.75	AV
High Channel (5825 MHz)-Above 1G							
Vertical	6039.059	71.91	-18.93	52.98	68.2	-15.22	PK
Vertical	6039.059	59.79	-18.93	40.86	54	-13.14	AV
Vertical	11650.128	61.12	-8.92	52.20	74	-21.80	PK
Vertical	11650.128	49.99	-8.92	41.07	54	-12.93	AV
Vertical	17475.001	57.29	-1.86	55.43	68.2	-12.77	PK
Vertical	17475.001	44.39	-1.86	42.53	54	-11.47	AV
Horizontal	6039.056	72.48	-18.93	53.54	68.2	-14.66	PK
Horizontal	6039.056	59.85	-18.93	40.92	54	-13.08	AV
Horizontal	11650.015	64.16	-8.92	55.24	74	-18.76	PK
Horizontal	11650.015	49.16	-8.92	40.24	54	-13.76	AV
Horizontal	17475.032	56.95	-1.86	55.09	68.2	-13.11	PK
Horizontal	17475.032	44.30	-1.86	42.44	54	-11.56	AV

Note: PK value is lower than the Average value limit, So average didn't record.
The 26.5-40G amplitude of spurious emissions that are attenuated by more than 20dB below the permissible value has no need to be reported.
Emission level (dBuV/m) = 20 log Emission level (uV/m).
Corrected Reading: Antenna Factor + Cable Loss + Read Level - Preamp Factor = Level.
The worst case is Antenna A.

Test Mode:	TX (5.8G) --802.11n-HT20

Polar	Frequency	Reading Level	Correct Factor	Measure-ment	Limits	Over	Detector Type
(H/V)	(MHz)	(dBuV/m)	(dB)	(dBuV/m)	(dBuV/m)	(dB)	
Low Channel (5745 MHz)-Above 1G							
Vertical	4679.019	70.02	-20.24	49.78	74	-24.22	PK
Vertical	4679.019	59.13	-20.24	38.89	54	-15.11	AV
Vertical	11490.196	64.81	-8.79	56.02	68.2	-12.18	PK
Vertical	11490.196	49.29	-8.79	40.50	54	-13.50	AV
Vertical	17235.037	57.38	-3.18	54.20	68.2	-14.00	PK
Vertical	17235.037	44.72	-3.18	41.54	54	-12.46	AV
Horizontal	4679.010	74.79	-20.24	54.55	74	-19.45	PK
Horizontal	4679.010	59.03	-20.24	38.79	54	-15.21	AV
Horizontal	11490.083	60.97	-8.79	52.18	68.2	-16.02	PK
Horizontal	11490.083	49.98	-8.79	41.19	54	-12.81	AV
Horizontal	17235.065	55.66	-3.18	52.48	68.2	-15.72	PK
Horizontal	17235.065	44.84	-3.18	41.66	54	-12.34	AV
Middle Channel (5785 MHz)-Above 1G							
Vertical	4592.173	74.96	-20.42	54.54	74	-19.46	PK
Vertical	4592.173	59.35	-20.42	38.93	54	-15.07	AV
Vertical	11570.153	62.32	-8.86	53.46	68.2	-14.74	PK
Vertical	11570.153	49.91	-8.86	41.05	54	-12.95	AV
Vertical	17355.084	58.17	-2.52	55.65	68.2	-12.55	PK
Vertical	17355.084	44.06	-2.52	41.54	54	-12.46	AV
Horizontal	4592.081	74.52	-20.42	54.11	74	-19.89	PK
Horizontal	4592.081	59.96	-20.42	39.55	54	-14.45	AV
Horizontal	11570.112	60.55	-8.86	51.69	68.2	-16.51	PK
Horizontal	11570.112	49.99	-8.86	41.13	54	-12.87	AV
Horizontal	17355.181	55.27	-2.52	52.75	68.2	-15.45	PK
Horizontal	17355.181	44.86	-2.52	42.34	54	-11.66	AV
High Channel (5825 MHz)-Above 1G							
Vertical	6039.178	71.92	-18.93	52.98	68.2	-15.22	PK
Vertical	6039.178	59.55	-18.93	40.62	54	-13.38	AV
Vertical	11650.169	62.78	-8.92	53.86	74	-20.14	PK
Vertical	11650.169	49.39	-8.92	40.47	54	-13.53	AV
Vertical	17475.009	55.25	-1.86	53.39	68.2	-14.81	PK
Vertical	17475.009	44.81	-1.86	42.95	54	-11.05	AV
Horizontal	6039.115	74.45	-18.93	55.52	68.2	-12.68	PK
Horizontal	6039.115	59.41	-18.93	40.48	54	-13.52	AV
Horizontal	11650.136	62.91	-8.92	53.99	74	-20.01	PK
Horizontal	11650.136	49.77	-8.92	40.85	54	-13.15	AV
Horizontal	17475.197	59.81	-1.86	57.95	68.2	-10.25	PK
Horizontal	17475.197	44.64	-1.86	42.78	54	-11.22	AV

Note: PK value is lower than the Average value limit, So average didn't record.
The 26.5-40G amplitude of spurious emissions that are attenuated by more than 20dB below the permissible value has no need to be reported.
Emission level (dBuV/m) = 20 log Emission level (uV/m).
Corrected Reading: Antenna Factor + Cable Loss + Read Level - Preamp Factor = Level.
Test Mode is MIMO Mode.

Test Mode:	TX (5.8G) -- 802.11n-HT40

Polar	Frequency	Reading Level	Correct Factor	Measure-ment	Limits	Over	Detector Type
(H/V)	(MHz)	(dBuV/m)	(dB)	(dBuV/m)	(dBuV/m)	(dB)	
Low Channel (5755 MHz)-Above 1G							
Vertical	4679.098	70.49	-20.24	50.25	74	-23.75	PK
Vertical	4679.098	59.14	-20.24	38.90	54	-15.10	AV
Vertical	11510.050	61.64	-8.81	52.83	74	-21.17	PK
Vertical	11510.050	49.66	-8.81	40.85	54	-13.15	AV
Vertical	17265.131	57.58	-3.01	54.57	68.2	-13.63	PK
Vertical	17265.131	44.28	-3.01	41.27	54	-12.73	AV
Horizontal	4679.180	74.37	-20.24	54.13	74	-19.87	PK
Horizontal	4679.180	59.22	-20.24	38.98	54	-15.02	AV
Horizontal	11510.139	61.45	-8.81	52.64	74	-21.36	PK
Horizontal	11510.139	49.38	-8.81	40.57	54	-13.43	AV
Horizontal	17265.043	57.86	-3.01	54.85	68.2	-13.35	PK
Horizontal	17265.043	44.26	-3.01	41.25	54	-12.75	AV
Middle Channel (5795 MHz)-Above 1G							
Vertical	6039.089	72.41	-18.93	53.48	68.2	-14.72	PK
Vertical	6039.089	59.64	-18.93	40.71	54	-13.29	AV
Vertical	11590.087	64.38	-8.87	55.51	74	-18.49	PK
Vertical	11590.087	49.28	-8.87	40.41	54	-13.59	AV
Vertical	17385.145	58.08	-2.35	55.73	68.2	-12.47	PK
Vertical	17385.145	44.81	-2.35	42.46	54	-11.54	AV
Horizontal	6039.143	71.39	-18.93	52.46	68.2	-15.74	PK
Horizontal	6039.143	59.94	-18.93	41.00	54	-13.00	AV
Horizontal	11590.080	61.45	-8.87	52.58	74	-21.42	PK
Horizontal	11590.080	49.89	-8.87	41.02	54	-12.98	AV
Horizontal	17385.068	55.78	-2.35	53.43	68.2	-14.77	PK
Horizontal	17385.068	44.89	-2.35	42.54	54	-11.46	AV

Note: PK value is lower than the Average value limit, So average didn't record.
The 26.5-40G amplitude of spurious emissions that are attenuated by more than 20dB below the permissible value has no need to be reported.
Emission level (dBuV/m) = 20 log Emission level (uV/m).
Corrected Reading: Antenna Factor + Cable Loss + Read Level - Preamp Factor = Level.
Test Mode is MIMO Mode.

Test Mode:	TX (5.8G) --802.11ac-HT20

Polar	Frequency	Reading Level	Correct Factor	Measure-ment	Limits	Over	Detector Type
(H/V)	(MHz)	(dBuV/m)	(dB)	(dBuV/m)	(dBuV/m)	(dB)	
Low Channel (5745 MHz)-Above 1G							
Vertical	4679.156	73.01	-20.24	52.77	74	-21.23	PK
Vertical	4679.156	59.69	-20.24	39.45	54	-14.55	AV
Vertical	11490.116	60.82	-8.79	52.03	68.2	-16.17	PK
Vertical	11490.116	49.33	-8.79	40.54	54	-13.46	AV
Vertical	17235.003	55.47	-3.18	52.29	68.2	-15.91	PK
Vertical	17235.003	44.71	-3.18	41.53	54	-12.47	AV
Horizontal	4679.091	70.59	-20.24	50.35	74	-23.65	PK
Horizontal	4679.091	59.34	-20.24	39.10	54	-14.90	AV
Horizontal	11490.190	61.15	-8.79	52.36	68.2	-15.84	PK
Horizontal	11490.190	49.14	-8.79	40.35	54	-13.65	AV
Horizontal	17235.114	56.82	-3.18	53.64	68.2	-14.56	PK
Horizontal	17235.114	44.36	-3.18	41.18	54	-12.82	AV
Middle Channel (5785 MHz)-Above 1G							
Vertical	4592.013	73.07	-20.42	52.66	74	-21.34	PK
Vertical	4592.013	59.93	-20.42	39.51	54	-14.49	AV
Vertical	11570.121	62.72	-8.86	53.86	68.2	-14.34	PK
Vertical	11570.121	49.33	-8.86	40.47	54	-13.53	AV
Vertical	17355.038	58.59	-2.52	56.07	68.2	-12.13	PK
Vertical	17355.038	44.53	-2.52	42.01	54	-11.99	AV
Horizontal	4592.047	72.64	-20.42	52.22	74	-21.78	PK
Horizontal	4592.047	59.10	-20.42	38.68	54	-15.32	AV
Horizontal	11570.178	62.62	-8.86	53.76	68.2	-14.44	PK
Horizontal	11570.178	49.68	-8.86	40.82	54	-13.18	AV
Horizontal	17355.125	55.19	-2.52	52.67	68.2	-15.53	PK
Horizontal	17355.125	44.78	-2.52	42.26	54	-11.74	AV
High Channel (5825 MHz)-Above 1G							
Vertical	6039.128	71.53	-18.93	52.60	68.2	-15.60	PK
Vertical	6039.128	59.27	-18.93	40.34	54	-13.66	AV
Vertical	11650.057	60.61	-8.92	51.69	74	-22.31	PK
Vertical	11650.057	49.84	-8.92	40.92	54	-13.08	AV
Vertical	17475.119	56.42	-1.86	54.56	68.2	-13.64	PK
Vertical	17475.119	44.91	-1.86	43.05	54	-10.95	AV
Horizontal	6039.038	72.04	-18.93	53.11	68.2	-15.09	PK
Horizontal	6039.038	59.89	-18.93	40.95	54	-13.05	AV
Horizontal	11650.141	60.81	-8.92	51.89	74	-22.11	PK
Horizontal	11650.141	49.99	-8.92	41.07	54	-12.93	AV
Horizontal	17475.174	55.47	-1.86	53.61	68.2	-14.59	PK
Horizontal	17475.174	44.38	-1.86	42.52	54	-11.48	AV

Note: PK value is lower than the Average value limit, So average didn't record.
The 26.5-40G amplitude of spurious emissions that are attenuated by more than 20dB below the permissible value has no need to be reported.
Emission level (dBuV/m) = 20 log Emission level (uV/m).
Corrected Reading: Antenna Factor + Cable Loss + Read Level - Preamp Factor = Level.
Test Mode is MIMO Mode.

Test Mode :	TX (5.8G) -- 802.11ac-HT40

Polar (H/V)	Frequency (MHz)	Reading Level (dBuV/m)	Correct Factor (dB)	Measure-ment (dBuV/m)	Limits (dBuV/m)	Over (dB)	Detector Type
Low Channel (5755 MHz)-Above 1G							
Vertical	4679.156	73.86	-20.24	53.62	74	-20.38	PK
Vertical	4679.156	59.31	-20.24	39.07	54	-14.93	AV
Vertical	11510.017	62.33	-8.81	53.52	74	-20.48	PK
Vertical	11510.017	49.50	-8.81	40.69	54	-13.31	AV
Vertical	17265.104	57.52	-3.01	54.51	68.2	-13.69	PK
Vertical	17265.104	44.34	-3.01	41.33	54	-12.67	AV
Horizontal	4679.181	73.84	-20.24	53.60	74	-20.40	PK
Horizontal	4679.181	59.35	-20.24	39.11	54	-14.89	AV
Horizontal	11510.030	63.13	-8.81	54.32	74	-19.68	PK
Horizontal	11510.030	49.83	-8.81	41.02	54	-12.98	AV
Horizontal	17265.049	58.43	-3.01	55.42	68.2	-12.78	PK
Horizontal	17265.049	44.36	-3.01	41.35	54	-12.65	AV
Middle Channel (5795 MHz)-Above 1G							
Vertical	6039.088	74.85	-18.93	55.92	68.2	-12.28	PK
Vertical	6039.088	59.42	-18.93	40.49	54	-13.51	AV
Vertical	11590.073	63.87	-8.87	55.00	74	-19.00	PK
Vertical	11590.073	49.77	-8.87	40.90	54	-13.10	AV
Vertical	17385.063	56.47	-2.35	54.12	68.2	-14.08	PK
Vertical	17385.063	44.76	-2.35	42.41	54	-11.59	AV
Horizontal	6039.124	74.47	-18.93	55.54	68.2	-12.66	PK
Horizontal	6039.124	59.50	-18.93	40.57	54	-13.43	AV
Horizontal	11590.134	62.61	-8.87	53.74	74	-20.26	PK
Horizontal	11590.134	49.42	-8.87	40.55	54	-13.45	AV
Horizontal	17385.062	57.25	-2.35	54.90	68.2	-13.30	PK
Horizontal	17385.062	44.35	-2.35	42.00	54	-12.00	AV

Note: PK value is lower than the Average value limit, So average didn't record.
The 26.5-40G amplitude of spurious emissions that are attenuated by more than 20dB below the permissible value has no need to be reported.
Emission level (dBuV/m) = 20 log Emission level (uV/m).
Corrected Reading: Antenna Factor + Cable Loss + Read Level - Preamp Factor = Level.
Test Mode is MIMO Mode.

Test Mode :	TX (5.8G) -- 802.11ac 80

Polar (H/V)	Frequency (MHz)	Reading Level (dBuV/m)	Correct Factor (dB)	Measure-ment (dBuV/m)	Limits (dBuV/m)	Over (dB)	Detector Type
Low Channel (5775 MHz)-Above 1G							
Vertical	4679.181	72.81	-20.24	52.57	74	-21.43	PK
Vertical	4679.181	59.45	-20.24	39.21	54	-14.79	AV
Vertical	11550.096	62.90	-8.84	54.06	74	-19.94	PK
Vertical	11550.096	49.44	-8.84	40.60	54	-13.40	AV
Vertical	17325.167	56.40	-2.68	53.72	68.2	-14.48	PK
Vertical	17325.167	44.43	-2.68	41.75	54	-12.25	AV
Horizontal	4679.039	73.41	-20.24	53.17	74	-20.83	PK
Horizontal	4679.039	59.22	-20.24	38.98	54	-15.02	AV
Horizontal	11550.036	63.78	-8.84	54.94	74	-19.06	PK
Horizontal	11550.036	49.03	-8.84	40.19	54	-13.81	AV
Horizontal	17325.112	56.75	-2.68	54.07	68.2	-14.13	PK
Horizontal	17325.112	44.35	-2.68	41.67	54	-12.33	AV

Note: PK value is lower than the Average value limit, So average didn't record.
The 26.5-40G amplitude of spurious emissions that are attenuated by more than 20dB below the permissible value has no need to be reported.
Emission level (dBuV/m) = 20 log Emission level (uV/m).
Corrected Reading: Antenna Factor + Cable Loss + Read Level - Preamp Factor = Level.
Test Mode is MIMO Mode.

Test Mode:	TX (5.8G) --802.11ax-HT20

Polar (H/V)	Frequency (MHz)	Reading Level (dBuV/m)	Correct Factor (dB)	Measure-ment (dBuV/m)	Limits (dBuV/m)	Over (dB)	Detector Type
Low Channel (5745 MHz)-Above 1G							
Vertical	4679.057	73.39	-20.24	53.15	74	-20.85	PK
Vertical	4679.057	59.99	-20.24	39.75	54	-14.25	AV
Vertical	11490.018	61.71	-8.79	52.92	68.2	-15.28	PK
Vertical	11490.018	49.99	-8.79	41.20	54	-12.80	AV
Vertical	17235.038	58.58	-3.18	55.40	68.2	-12.80	PK
Vertical	17235.038	44.01	-3.18	40.83	54	-13.17	AV
Horizontal	4679.102	70.55	-20.24	50.31	74	-23.69	PK
Horizontal	4679.102	59.87	-20.24	39.63	54	-14.37	AV
Horizontal	11490.141	60.14	-8.79	51.35	68.2	-16.85	PK
Horizontal	11490.141	49.46	-8.79	40.67	54	-13.33	AV
Horizontal	17235.179	55.82	-3.18	52.64	68.2	-15.56	PK
Horizontal	17235.179	44.27	-3.18	41.09	54	-12.91	AV
Middle Channel (5785 MHz)-Above 1G							
Vertical	4592.059	70.49	-20.42	50.08	74	-23.92	PK
Vertical	4592.059	59.83	-20.42	39.41	54	-14.59	AV
Vertical	11570.171	62.28	-8.86	53.42	68.2	-14.78	PK
Vertical	11570.171	49.12	-8.86	40.26	54	-13.74	AV
Vertical	17355.078	59.59	-2.52	57.07	68.2	-11.13	PK
Vertical	17355.078	44.75	-2.52	42.23	54	-11.77	AV
Horizontal	4592.149	70.43	-20.42	50.01	74	-23.99	PK
Horizontal	4592.149	59.33	-20.42	38.91	54	-15.09	AV
Horizontal	11570.121	64.22	-8.86	55.36	68.2	-12.84	PK
Horizontal	11570.121	49.48	-8.86	40.62	54	-13.38	AV
Horizontal	17355.191	59.29	-2.52	56.77	68.2	-11.43	PK
Horizontal	17355.191	44.18	-2.52	41.66	54	-12.34	AV
High Channel (5825 MHz)-Above 1G							
Vertical	6039.088	70.72	-18.93	51.79	68.2	-16.41	PK
Vertical	6039.088	59.10	-18.93	40.17	54	-13.83	AV
Vertical	11650.131	60.12	-8.92	51.20	74	-22.80	PK
Vertical	11650.131	49.35	-8.92	40.43	54	-13.57	AV
Vertical	17475.085	56.31	-1.86	54.45	68.2	-13.75	PK
Vertical	17475.085	44.02	-1.86	42.16	54	-11.84	AV
Horizontal	6039.112	72.20	-18.93	53.27	68.2	-14.93	PK
Horizontal	6039.112	59.66	-18.93	40.73	54	-13.27	AV
Horizontal	11650.165	62.78	-8.92	53.86	74	-20.14	PK
Horizontal	11650.165	49.93	-8.92	41.01	54	-12.99	AV
Horizontal	17475.180	59.09	-1.86	57.23	68.2	-10.97	PK
Horizontal	17475.180	44.73	-1.86	42.87	54	-11.13	AV

Note: PK value is lower than the Average value limit, So average didn't record.
The 26.5-40G amplitude of spurious emissions that are attenuated by more than 20dB below the permissible value has no need to be reported.
Emission level (dBuV/m) = 20 log Emission level (uV/m).
Corrected Reading: Antenna Factor + Cable Loss + Read Level - Preamp Factor = Level.
Test Mode is MIMO Mode.

Test Mode :	TX (5.8G) -- 802.11ax-HT40

Polar (H/V)	Frequency (MHz)	Reading Level (dBuV/m)	Correct Factor (dB)	Measure-ment (dBuV/m)	Limits (dBuV/m)	Over (dB)	Detector Type
Low Channel (5755 MHz)-Above 1G							
Vertical	4679.046	71.64	-20.24	51.40	74	-22.60	PK
Vertical	4679.046	59.78	-20.24	39.53	54	-14.47	AV
Vertical	11510.125	63.34	-8.81	54.53	74	-19.47	PK
Vertical	11510.125	49.38	-8.81	40.57	54	-13.43	AV
Vertical	17265.192	57.67	-3.01	54.66	68.2	-13.54	PK
Vertical	17265.192	44.09	-3.01	41.08	54	-12.92	AV
Horizontal	4679.129	70.85	-20.24	50.61	74	-23.39	PK
Horizontal	4679.129	59.33	-20.24	39.09	54	-14.91	AV
Horizontal	11510.183	60.33	-8.81	51.52	74	-22.48	PK
Horizontal	11510.183	49.70	-8.81	40.89	54	-13.11	AV
Horizontal	17265.131	58.95	-3.01	55.94	68.2	-12.26	PK
Horizontal	17265.131	44.56	-3.01	41.55	54	-12.45	AV
Middle Channel (5795 MHz)-Above 1G							
Vertical	6039.154	71.63	-18.93	52.70	68.2	-15.50	PK
Vertical	6039.154	59.21	-18.93	40.28	54	-13.72	AV
Vertical	11590.024	63.38	-8.87	54.51	74	-19.49	PK
Vertical	11590.024	49.85	-8.87	40.98	54	-13.02	AV
Vertical	17385.176	58.81	-2.35	56.46	68.2	-11.74	PK
Vertical	17385.176	44.31	-2.35	41.96	54	-12.04	AV
Horizontal	6039.189	72.52	-18.93	53.59	68.2	-14.61	PK
Horizontal	6039.189	59.10	-18.93	40.17	54	-13.83	AV
Horizontal	11590.087	64.71	-8.87	55.84	74	-18.16	PK
Horizontal	11590.087	49.32	-8.87	40.45	54	-13.55	AV
Horizontal	17385.000	57.48	-2.35	55.13	68.2	-13.07	PK
Horizontal	17385.000	44.40	-2.35	42.05	54	-11.95	AV

Note: PK value is lower than the Average value limit, So average didn't record.
The 26.5-40G amplitude of spurious emissions that are attenuated by more than 20dB below the permissible value has no need to be reported.
Emission level (dBuV/m) = 20 log Emission level (uV/m).
Corrected Reading: Antenna Factor + Cable Loss + Read Level - Preamp Factor = Level.
Test Mode is MIMO Mode.

Test Mode :	TX (5.8G) -- 802.11ax 80

Polar	Frequency	Reading Level	Correct Factor	Measure-ment	Limits	Over	Detector Type
(H/V)	(MHz)	(dBuV/m)	(dB)	(dBuV/m)	(dBuV/m)	(dB)	
Low Channel (5775 MHz)-Above 1G							
Vertical	4679.118	72.27	-20.24	52.03	74	-21.97	PK
Vertical	4679.118	59.83	-20.24	39.59	54	-14.41	AV
Vertical	11550.089	61.71	-8.84	52.87	74	-21.13	PK
Vertical	11550.089	49.11	-8.84	40.27	54	-13.73	AV
Vertical	17325.122	58.46	-2.68	55.78	68.2	-12.42	PK
Vertical	17325.122	44.81	-2.68	42.13	54	-11.87	AV
Horizontal	4679.027	74.87	-20.24	54.63	74	-19.37	PK
Horizontal	4679.027	59.59	-20.24	39.35	54	-14.65	AV
Horizontal	11550.150	62.11	-8.84	53.27	74	-20.73	PK
Horizontal	11550.150	49.26	-8.84	40.42	54	-13.58	AV
Horizontal	17325.084	56.46	-2.68	53.78	68.2	-14.42	PK
Horizontal	17325.084	44.72	-2.68	42.04	54	-11.96	AV

Note: PK value is lower than the Average value limit, So average didn't record.
The 26.5-40G amplitude of spurious emissions that are attenuated by more than 20dB below the permissible value has no need to be reported.
Emission level (dBuV/m) = 20 log Emission level (uV/m).
Corrected Reading: Antenna Factor + Cable Loss + Read Level - Preamp Factor = Level.
Test Mode is MIMO Mode.

Test Mode:	TX (5.8G) --802.11be-HT20

Polar	Frequency	Reading Level	Correct Factor	Measure-ment	Limits	Over	Detector Type
(H/V)	(MHz)	(dBuV/m)	(dB)	(dBuV/m)	(dBuV/m)	(dB)	
Low Channel (5745 MHz)-Above 1G							
Vertical	4679.034	70.91	-20.24	50.67	74	-23.33	PK
Vertical	4679.034	59.78	-20.24	39.54	54	-14.46	AV
Vertical	11490.026	62.34	-8.79	53.55	68.2	-14.65	PK
Vertical	11490.026	49.46	-8.79	40.67	54	-13.33	AV
Vertical	17235.135	56.18	-3.18	53.00	68.2	-15.20	PK
Vertical	17235.135	44.91	-3.18	41.73	54	-12.27	AV
Horizontal	4679.079	70.70	-20.24	50.46	74	-23.54	PK
Horizontal	4679.079	59.22	-20.24	38.98	54	-15.02	AV
Horizontal	11490.123	60.94	-8.79	52.15	68.2	-16.05	PK
Horizontal	11490.123	49.67	-8.79	40.88	54	-13.12	AV
Horizontal	17235.126	55.78	-3.18	52.60	68.2	-15.60	PK
Horizontal	17235.126	44.06	-3.18	40.88	54	-13.12	AV
Middle Channel (5785 MHz)-Above 1G							
Vertical	4592.050	70.70	-20.42	50.29	74	-23.71	PK
Vertical	4592.050	59.53	-20.42	39.12	54	-14.88	AV
Vertical	11570.073	63.93	-8.86	55.07	68.2	-13.13	PK
Vertical	11570.073	49.83	-8.86	40.97	54	-13.03	AV
Vertical	17355.103	55.19	-2.52	52.67	68.2	-15.53	PK
Vertical	17355.103	44.04	-2.52	41.52	54	-12.48	AV
Horizontal	4592.112	72.91	-20.42	52.50	74	-21.50	PK
Horizontal	4592.112	59.03	-20.42	38.62	54	-15.38	AV
Horizontal	11570.144	61.58	-8.86	52.72	68.2	-15.48	PK
Horizontal	11570.144	49.78	-8.86	40.92	54	-13.08	AV
Horizontal	17355.086	55.01	-2.52	52.49	68.2	-15.71	PK
Horizontal	17355.086	44.23	-2.52	41.71	54	-12.29	AV
High Channel (5825 MHz)-Above 1G							
Vertical	6039.141	70.85	-18.93	51.92	68.2	-16.28	PK
Vertical	6039.141	59.70	-18.93	40.76	54	-13.24	AV
Vertical	11650.063	61.73	-8.92	52.81	74	-21.19	PK
Vertical	11650.063	49.45	-8.92	40.53	54	-13.47	AV
Vertical	17475.138	58.22	-1.86	56.36	68.2	-11.84	PK
Vertical	17475.138	44.87	-1.86	43.01	54	-10.99	AV
Horizontal	6039.109	73.48	-18.93	54.55	68.2	-13.65	PK
Horizontal	6039.109	59.85	-18.93	40.92	54	-13.08	AV
Horizontal	11650.051	60.86	-8.92	51.94	74	-22.06	PK
Horizontal	11650.051	49.55	-8.92	40.63	54	-13.37	AV
Horizontal	17475.106	58.14	-1.86	56.28	68.2	-11.92	PK
Horizontal	17475.106	44.15	-1.86	42.29	54	-11.71	AV

Note: PK value is lower than the Average value limit, So average didn't record.
The 26.5-40G amplitude of spurious emissions that are attenuated by more than 20dB below the permissible value has no need to be reported.
Emission level (dBuV/m) = 20 log Emission level (uV/m).
Corrected Reading: Antenna Factor + Cable Loss + Read Level - Preamp Factor = Level.
Test Mode is MIMO Mode.

Test Mode :	TX (5.8G) -- 802.11be-HT40

Polar	Frequency	Reading Level	Correct Factor	Measure-ment	Limits	Over	Detector Type
(H/V)	(MHz)	(dBuV/m)	(dB)	(dBuV/m)	(dBuV/m)	(dB)	
Low Channel (5755 MHz)-Above 1G							
Vertical	4679.199	73.38	-20.24	53.13	74	-20.87	PK
Vertical	4679.199	59.90	-20.24	39.65	54	-14.35	AV
Vertical	11510.179	60.74	-8.81	51.93	74	-22.07	PK
Vertical	11510.179	49.30	-8.81	40.49	54	-13.51	AV
Vertical	17265.059	55.57	-3.01	52.56	68.2	-15.64	PK
Vertical	17265.059	44.34	-3.01	41.33	54	-12.67	AV
Horizontal	4679.002	74.32	-20.24	54.08	74	-19.92	PK
Horizontal	4679.002	59.36	-20.24	39.11	54	-14.89	AV
Horizontal	11510.132	60.43	-8.81	51.62	74	-22.38	PK
Horizontal	11510.132	49.57	-8.81	40.76	54	-13.24	AV
Horizontal	17265.032	56.95	-3.01	53.94	68.2	-14.26	PK
Horizontal	17265.032	44.00	-3.01	40.99	54	-13.01	AV
Middle Channel (5795 MHz)-Above 1G							
Vertical	6039.051	73.12	-18.93	54.19	68.2	-14.01	PK
Vertical	6039.051	59.98	-18.93	41.05	54	-12.95	AV
Vertical	11590.053	60.89	-8.87	52.02	74	-21.98	PK
Vertical	11590.053	49.70	-8.87	40.83	54	-13.17	AV
Vertical	17385.086	57.06	-2.35	54.71	68.2	-13.49	PK
Vertical	17385.086	44.43	-2.35	42.08	54	-11.92	AV
Horizontal	6039.108	70.82	-18.93	51.89	68.2	-16.31	PK
Horizontal	6039.108	59.52	-18.93	40.59	54	-13.41	AV
Horizontal	11590.007	62.98	-8.87	54.11	74	-19.89	PK
Horizontal	11590.007	49.52	-8.87	40.65	54	-13.35	AV
Horizontal	17385.150	59.64	-2.35	57.29	68.2	-10.91	PK
Horizontal	17385.150	44.59	-2.35	42.24	54	-11.76	AV

Note: PK value is lower than the Average value limit, So average didn't record.
The 26.5-40G amplitude of spurious emissions that are attenuated by more than 20dB below the permissible value has no need to be reported.
Emission level (dBuV/m) = 20 log Emission level (uV/m).
Corrected Reading: Antenna Factor + Cable Loss + Read Level - Preamp Factor = Level.
Test Mode is MIMO Mode.

Test Mode :	TX (5.8G) -- 802.11be 80

Polar (H/V)	Frequency (MHz)	Reading Level (dBuV/m)	Correct Factor (dB)	Measure-ment (dBuV/m)	Limits (dBuV/m)	Over (dB)	Detector Type
Low Channel (5775 MHz)-Above 1G							
Vertical	4679.177	72.36	-20.24	52.12	74	-21.88	PK
Vertical	4679.177	59.43	-20.24	39.19	54	-14.81	AV
Vertical	11550.112	62.96	-8.84	54.12	74	-19.88	PK
Vertical	11550.112	49.87	-8.84	41.03	54	-12.97	AV
Vertical	17325.166	59.11	-2.68	56.43	68.2	-11.77	PK
Vertical	17325.166	44.06	-2.68	41.38	54	-12.62	AV
Horizontal	4679.036	73.36	-20.24	53.12	74	-20.88	PK
Horizontal	4679.036	59.69	-20.24	39.45	54	-14.55	AV
Horizontal	11550.015	61.65	-8.84	52.81	74	-21.19	PK
Horizontal	11550.015	49.81	-8.84	40.97	54	-13.03	AV
Horizontal	17325.120	58.40	-2.68	55.72	68.2	-12.48	PK
Horizontal	17325.120	44.76	-2.68	42.08	54	-11.92	AV

Note: PK value is lower than the Average value limit, So average didn't record.
The 26.5-40G amplitude of spurious emissions that are attenuated by more than 20dB below the permissible value has no need to be reported.
Emission level (dBuV/m) = 20 log Emission level (uV/m).
Corrected Reading: Antenna Factor + Cable Loss + Read Level - Preamp Factor = Level.
Test Mode is MIMO Mode.

8. Antenna Requirement

8.1 Limit

15.203 requirement: For intentional device, according to 15.203: an intentional radiator shall be designed to ensure that no antenna other than that furnished by the responsible party shall be used with the device.

8.2 Test Result

The EUT antenna is Exteral antenna. It comply with the standard requirement.

9. EUT Photographs

EUT Photo 1

EUT Photo 2

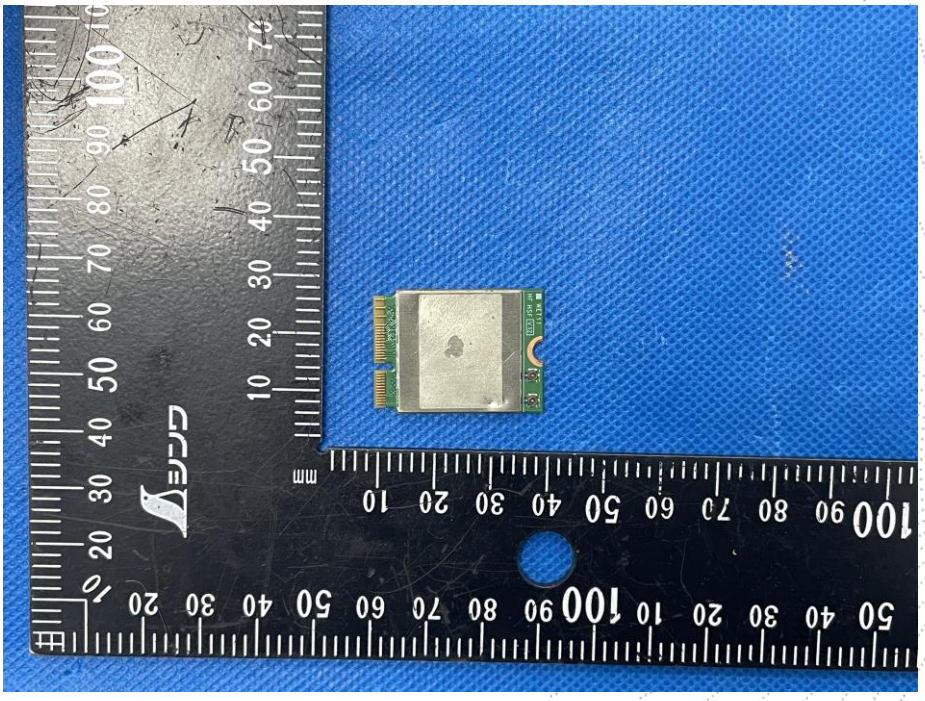

NOTE: Appendix-Photographs Of EUT Constructional Details.

10. EUT Test Setup Photographs

Conducted Emissions Photo

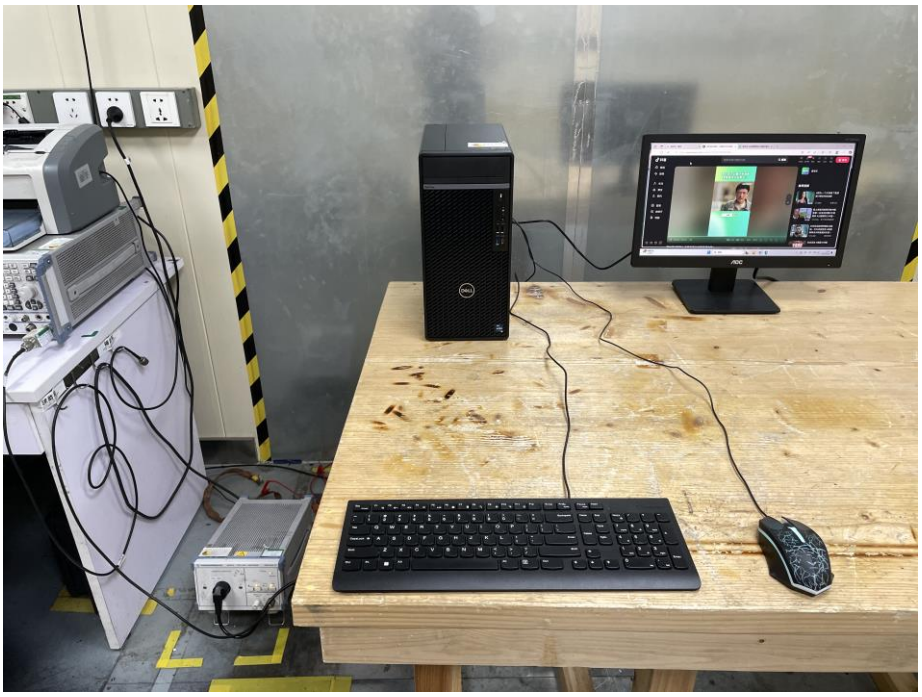

Radiated Measurement Photos

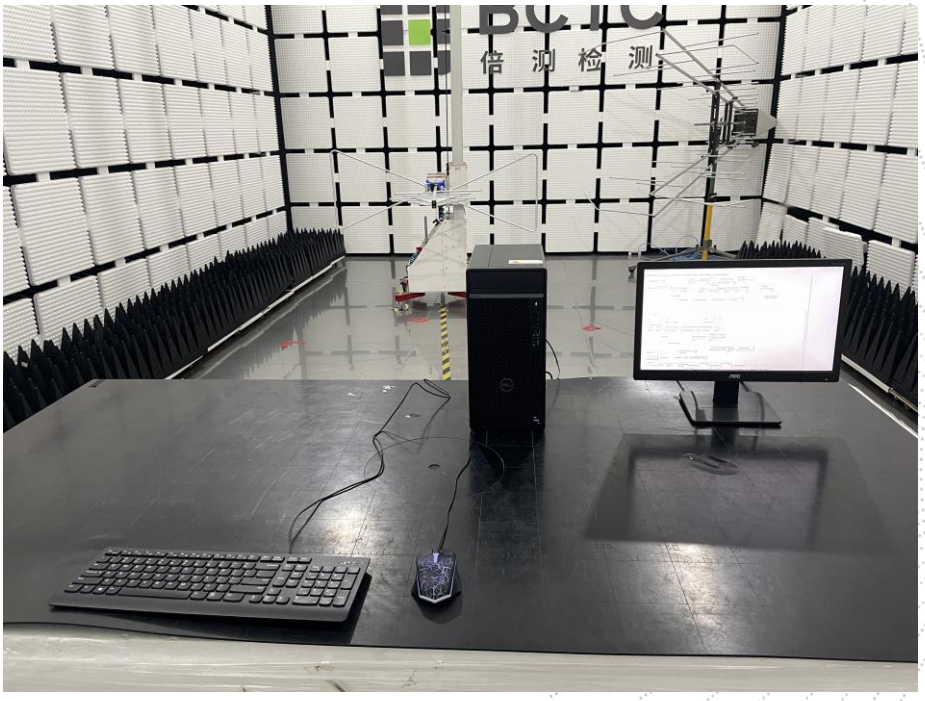

BCTC
倍 测 检

STATEMENT

1. The equipment lists are traceable to the national reference standards.

2. The test report can not be partially copied unless prior written approval is issued from our lab.

3. The test report is invalid without the "special seal for inspection and testing".

4. The test report is invalid without the signature of the approver.

5. The test process and test result is only related to the Unit Under Test.

6. Sample information is provided by the client and the laboratory is not responsible for its authenticity.

7. The quality system of our laboratory is in accordance with ISO/IEC17025.

8. If there is any objection to this test report, the client should inform issuing laboratory within 15 days from the date of receiving test report.

Address:
1-2/F., Building B, Pengzhou Industrial Park, No.158, Fuyuan 1st Road, Zhancheng, Fuhai Subdistrict, Bao'an District, Shenzhen, Guangdong, China

TEL: 400-788-9558

P.C.: 518103

FAX: 0755-33229357

Website: http://www.chnbctc.com

Consultation E-mail: bctc@bctc-lab.com.cn

Complaint/Advice E-mail: advice@bctc-lab.com.cn

※※※※※ END ※※※※※