TEST REPORT

Report No.:	BCTC2504668210-1E
Applicant:	Ugreen Group Limited
Product Name:	BE6500 Wi-Fi 7 Bluetooth Wireless PCIe Adapter
Test Model:	CM822
Tested Date:	2025-04-21 to 2025-05-14
Issued Date:	2025-05-15

Shenzhen BCTC Testing Co., Ltd.

FCC ID: 2AQI5-CM822

Product Name:	BE6500 Wi-Fi 7 Bluetooth Wireless PCIe Adapter
Trademark:	UGREEN
Model/Type Reference:	CM822
Prepared For:	Ugreen Group Limited
Address:	Ugreen Building, Longcheng Industrial Park, Longguanxi Road, Longhua, ShenZhen, China
Manufacturer:	Ugreen Group Limited
Address:	Ugreen Building, Longcheng Industrial Park, Longguanxi Road, Longhua, ShenZhen, China
Factory:	Huizhou MTN Weiye Technology Development Co., Ltd.
Address:	No. 1 Factory Building, No. 2 Factory Building, No. 1, Huaxing Avenue, ChenjiangStreet, Zhongkai High tech Zone, Huizhou City, Guangdong Province, China
Prepared By:	Shenzhen BCTC Testing Co., Ltd.
Address:	1-2/F., Building B, Pengzhou Industrial Park, No.158, Fuyuan 1st Road, Zhancheng, Fuhai Subdistrict, Bao'an District, Shenzhen, Guangdong, China
Sample Received Date:	2025-04-21
Sample tested Date:	2025-04-21 to 2025-05-14
Issue Date:	2025-05-15
Report No.:	BCTC2504668210-1E
Test Standards	CFR 47 FCC Part 15.247 ANSI C63.10:2013
Test Results	PASS
Remark:	This is Bluetooth Classic radio test report.

Tested by:

Brave Zeng/ Project Handler

Approved by:

Zero Zhou/Reviewer

The test report is effective only with both signature and specialized stamp. This result(s) shown in this report refer only to the sample(s) tested. Without written approval of Shenzhen BCTC Testing Co., Ltd, this report can't be reproduced except in full. The tested sample(s) and the sample information are provided by the client.

Table Of Content

Test Report Declaration Page
1. Version 4
2. Test Summary 5
3. Measurement Uncertainty 6
4. Product Information And Test Setup 7
4.1 Product Information 7
4.2 Test Setup Configuration 7
4.3 Support Equipment 8
4.4 Channel List 9
4.5 Test Mode 9
4.6 Table Of Parameters Of Text Software Setting 10
5. Test Facility And Test Instrument Used 11
5.1 Test Facility 11
5.2 Test Instrument Used 11
6. Conducted Emissions 13
6.1 Block Diagram Of Test Setup 13
6.2 Limit 13
6.3 Test procedure 13
6.4 EUT operating Conditions 13
6.5 Test Result 14
7. Radiated emissions 16
7.1 Block Diagram Of Test Setup 16
7.2 Limit 17
7.3 Test procedure 18
7.4 EUT operating Conditions 19
7.5 Test Result 19
8. Radiated Band Emission Measurement And Restricted Bands Of Operation 25
8.1 Block Diagram Of Test Setup 25
8.2 Limit 25
8.3 Test procedure 26
8.4 EUT operating Conditions 26
8.5 Test Result 27
9. Antenna Requirement 28
9.1 Limit 28
9.2 Test Result 28
10. EUT Photographs 29
11. EUT Test Setup Photographs 30

(Note: N/A Means Not Applicable)

1. Version

Report No.	Issue Date	Description	Approved
BCTC2504668210-1E	2025-05-15	Original	Valid

2. Test Summary

The Product has been tested according to the following specifications:

No.	Test Parameter	Clause No.	Results
1	Conducted Emission	15.207	PASS
2	Radiated Spurious Emission	15.247 (d), 15.205	PASS
3	Restricted Band of Operation	15.205	PASS
4	Band Edge (Out of Band Emissions)	15.247(d)	PASS
5	Antenna Requirement	15.203	PASS

Note: According to the following changes in the product, change the antenna,
Therefore, conducted emission and radiation emission, radiation stray and radiation sideband tests were only carried out in this report on the original report (RFBARR-WTW-P23040352-2).

New

3. Measurement Uncertainty

Where relevant, the following measurement uncertainty levels have been estimated for tests performed on the Product as specified in CISPR 16-4-2. This uncertainty represents an expanded uncertainty expressed at approximately the 95% confidence level using a coverage factor of k=2.

No.	Item	Uncertainty
1	3m chamber Radiated spurious mission(30MHz-1GHz)	U=4.3dB
2	3m chamber Radiated spurious emission(9KHz-30MHz)	U=3.7dB
3	3m chamber Radiated spurious emission(1GHz-18GHz)	U=4.5dB
4	3m chamber Radiated spurious mission(18GHz-40GHz)	U=3.34dB
5	Conducted Emission (150kHz-30MHz)	U=3.20dB
6	Conducted Adjacent channel power	U=1.38dB
7	Conducted output power uncertainty Above 1G	U=1.576dB
8	Conducted output power uncertainty below 1G	U=1.28dB
9	humidity uncertainty	U=5.3%
10	Temperature uncertainty	U=0.59℃

4. Product Information And Test Setup

4.1 Product Information

Model/Type reference:	CM822
P/N code Differences:	All the P/N code and test models are the same circuit and RF module, except for the sales platform.
Bluetooth Version:	5.4
Hardware Version:	N/A
Software Version:	N/A
Operation Frequency:	2402-2480MHz
Type of Modulation:	GFSK, π/ 4 DQPSK, 8DPSK
Number Of Channel	79CH
Antenna installation:	External antenna
Antenna Gain:	1.67 dBi Remark: ☒ The antenna gain of the product comes from the antenna report provided by the customer, and the test data is affected by the customer information. ☐ The antenna gain of the product is provided by the customer, and the test data is affected by the customer information.
Ratings:	DC 3.3V

Remark:
- P/N code in the below table, for marketing purpose, will be marked on the marking plate.

55204	55204EU	55204UK	55204US	55204JP	55204CN	55204KC	55204A
55204B	55204C	55204P	55204X	55204U	KC-55204		
65785	65785EU	65785UK	65785US	65785JP	65785CN	65785KC	65785A
65785B	65785C	65785P	65785X	65785U	KC-65785		

4.2 Test Setup Configuration

See test photographs attached in *EUT TEST SETUP PHOTOGRAPHS* for the actual connections between Product and support equipment.

4.3 Support Equipment

Item	Equipment	Mfr/Brand	Model/Type No.	Series No.	Note
E-1	BE6500 Wi-Fi 7 Bluetooth Wireless PCIe Adapter	UGREEN	CM822	N/A	EUT
E-2	HDMI cable	UGREEN	/	---	Auxiliary
E-3	Display	AOC	U27V5C	---	Auxiliary
E-4	Host	Assemble the computer	D9A	---	Auxiliary
E-5	Keyboard	Logitech	M-U0026	---	Auxiliary
E-6	Mouse	Logitech	YU0036	---	Auxiliary
E-7	Router	XiaoMi	R4A	---	Auxiliary

Item	Shielded Type	Ferrite Core	Length	Note
C-1	N/A	N/A	0M	DC cable unshielded

Notes:
1. All the equipment/cables were placed in the worst-case configuration to maximize the emission during the test.
2. Grounding was established in accordance with the manufacturer's requirements and conditions for the intended use.

4.4 Channel List

CH	Frequency (MHz)	CH	Frequency (MHz)	CH	Frequency (MHz)	CH	Frequency (MHz)
0	2402	1	2403	2	2404	3	2405
4	2406	5	2407	6	2408	7	2409
8	2410	9	2411	10	2412	11	2413
12	2414	13	2415	14	2416	15	2417
16	2418	17	2419	18	2420	19	2421
20	2422	21	2423	22	2424	23	2425
24	2426	25	2427	26	2428	27	2429
28	2430	29	2431	30	2432	31	2433
32	2434	33	2435	34	2436	35	2437
36	2438	37	2439	38	2440	39	2441
40	2442	41	2443	42	2444	43	2445
44	2446	45	2447	46	2448	47	2449
48	2450	49	2451	50	2452	51	2453
52	2454	53	2455	54	2456	55	2457
56	2458	57	2459	58	2460	59	2461
60	2462	61	2463	62	2464	63	2465
64	2466	65	2467	66	2468	67	2469
68	2470	69	2471	70	2472	71	2473
72	2474	73	2475	74	2476	75	2477
76	2478	77	2479	78	2480	79	/

4.5 Test Mode

To investigate the maximum EMI emission characteristics generates from EUT, the test system was pre-scanning tested base on the consideration of following EUT operation mode or test configuration mode which possible have effect on EMI emission level. Each of these EUT operation mode(s) or test configuration mode(s) mentioned above was evaluated respectively.

Test Mode	Test mode	Low channel	Middle channel	High channel
1	Transmitting(GFSK)	2402MHz	2441MHz	2480MHz
2	Transmitting(π/ 4 DQPSK)	2402MHz	2441MHz	2480MHz
3	Transmitting(8DPSK)	2402MHz	2441MHz	2480MHz
4	BT Link (Conducted emission & Radiated emission)			

Note:
(1) The measurements are performed at the highest, middle, lowest available channels.
(2) Fully-charged battery is used during the test

4.6 Table Of Parameters Of Text Software Setting

During testing channel & power controlling software provided by the customer was used to control the operating channel as well as the output power level. The RF output power selection is for the setting of RF output power expected by the customer and is going to be fixed on the firmware of the final end product power parameters

Test software Version	**CMD**		
Frequency	2402 MHz	2441 MHz	2480 MHz
Parameters	DEF	DEF	DEF

5. Test Facility And Test Instrument Used

5.1 Test Facility

All measurement facilities used to collect the measurement data are located at Shenzhen BCTC Testing Co., Ltd. Address: 1-2/F., Building B, Pengzhou Industrial Park, No.158, Fuyuan 1st Road, Zhancheng, Fuhai Subdistrict, Bao'an District, Shenzhen, Guangdong, China. The site and apparatus are constructed in conformance with the requirements of ANSI C63.4 and CISPR 16-1-1 other equivalent standards.
FCC Test Firm Registration Number: 712850
A2LA certificate registration number is: CN1212
ISED Registered No.: 23583
ISED CAB identifier: CN0017

5.2 Test Instrument Used

Conducted Emissions Test					
Equipment	**Manufacturer**	**Model#**	**Serial#**	**Last Cal.**	**Next Cal.**
Receiver	R&S	ESR	102075	May 16, 2024	May 15, 2025
LISN	R&S	ENV216	101375	May 16, 2024	May 15, 2025
Software	Frad	EZ-EMC	EMC-CON 3A1	\	\
Pulse limiter	Schwarzbeck	VTSD9561-F	01323	May 16, 2024	May 15, 2025

RF Conducted Test					
Equipment	**Manufacturer**	**Model#**	**Serial#**	**Last Cal.**	**Next Cal.**
Power metter	Keysight	E4419	\	May 16, 2024	May 15, 2025
Power Sensor (AV)	Keysight	E9300A	\	May 16, 2024	May 15, 2025
Signal Analyzer20kHz-26.5GHz	Keysight	N9020A	MY49100060	May 16, 2024	May 15, 2025
Spectrum Analyzer9kHz-40GHz	R&S	FSP40	100363	May 16, 2024	May 15, 2025
Radio frequency control box	MAIWEI	MW100-RFCB	\	\	\
Software	MAIWEI	MTS 8310	\	\	\

Radiated Emissions Test (966 Chamber02)					
Equipment	**Manufacturer**	**Model#**	**Serial#**	**Last Cal.**	**Next Cal.**
966 chamber	SKET	966 Room	966	Oct. 31. 2024	Oct. 30. 2027
Receiver	R&S	ESR	102075	May 16, 2024	May 15, 2025
Receiver	R&S	ESRI7	100010	Oct. 31. 2024	Oct. 30. 2025
Amplifier	SKET	LNPA-30M01G-30	SK2021082004	Oct. 31. 2024	Oct. 30. 2025
TRILOG Broadband Antenna	Schwarzbeck	VULB9168	1323	Feb. 28, 2025	Feb. 27, 2026
Loop Antenna(9KHz-30MHz)	Schwarzbeck	FMZB1519B	00014	May 21, 2024	May 20, 2025
Amplifier	SKET	LAPA_01G18G-45dB	SK2021040901	May 16, 2024	May 15, 2025
Horn Antenna	Schwarzbeck	BBHA9120D	1541	May 21, 2024	May 20, 2025
Amplifier(18GHz-40GHz)	MITEQ	TTA1840-35-HG	2034381	May 16, 2024	May 15, 2025
Horn Antenna(18GHz-40GHz)	Schwarzbeck	BBHA9170	00822	May 21, 2024	May 20, 2025
Spectrum Analyzer9kHz-40GHz	R&S	FSP40	100363	May 16, 2024	May 15, 2025
Software	Frad	EZ-EMC	FA-03A2 RE	\	\

6. Conducted Emissions

6.1 Block Diagram Of Test Setup

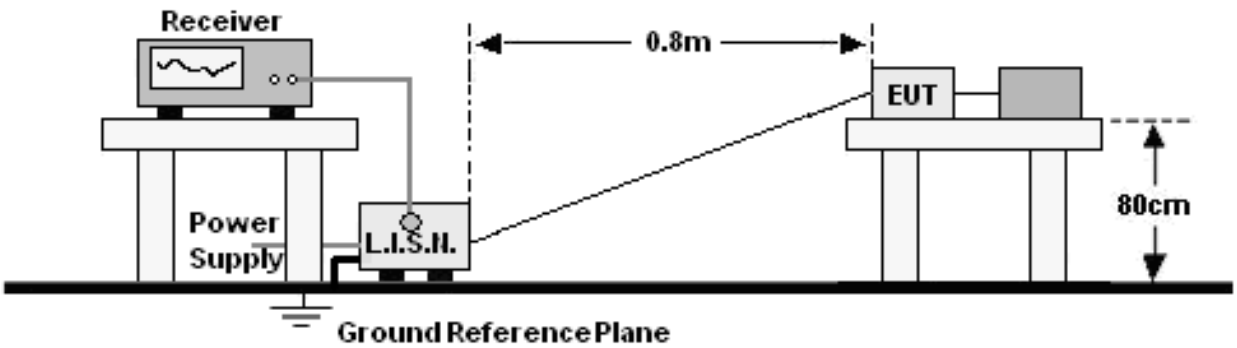

6.2 Limit

Frequency (MHz)	Limit (dBuV)	
	Quas-peak	Average
0.15 -0.5	66 - 56 *	56 - 46 *
0.50 -5.0	56.00	46.00
5.0 -30.0	60.00	50.00

Notes:
1. *Decreasing linearly with logarithm of frequency.
2. The lower limit shall apply at the transition frequencies.

6.3 Test procedure

Receiver Parameters	Setting
Attenuation	10 dB
Start Frequency	0.15 MHz
Stop Frequency	30 MHz
IF Bandwidth	9 kHz

a. The Product was placed on a nonconductive table 0.8 m above the horizontal ground reference plane, and 0.4 m from the vertical ground reference plane, and connected to the main through Line Impedance Stability Network (L.I.S.N).
b. The RBW of the receiver was set at 9 kHz in 150 kHz ~ 30MHz with Peak and AVG detector in Max Hold mode. Run the receiver's pre-scan to record the maximum disturbance generated from Product in all power lines in the full band.
c. For each frequency whose maximum record was higher or close to limit, measure its QP and AVG values and record.

6.4 EUT operating Conditions

The EUT was configured for testing in a typical fashion (as a customer would normally use it). The EUT has been programmed to continuously transmit during test. This operating condition was tested and used to collect the included data.

6.5 Test Result

Temperature:	26 ℃	Relative Humidity:	54%
Pressure:	101KPa	Phase :	L
Test Mode:	Mode 4	Test Voltage :	DC 3.3V

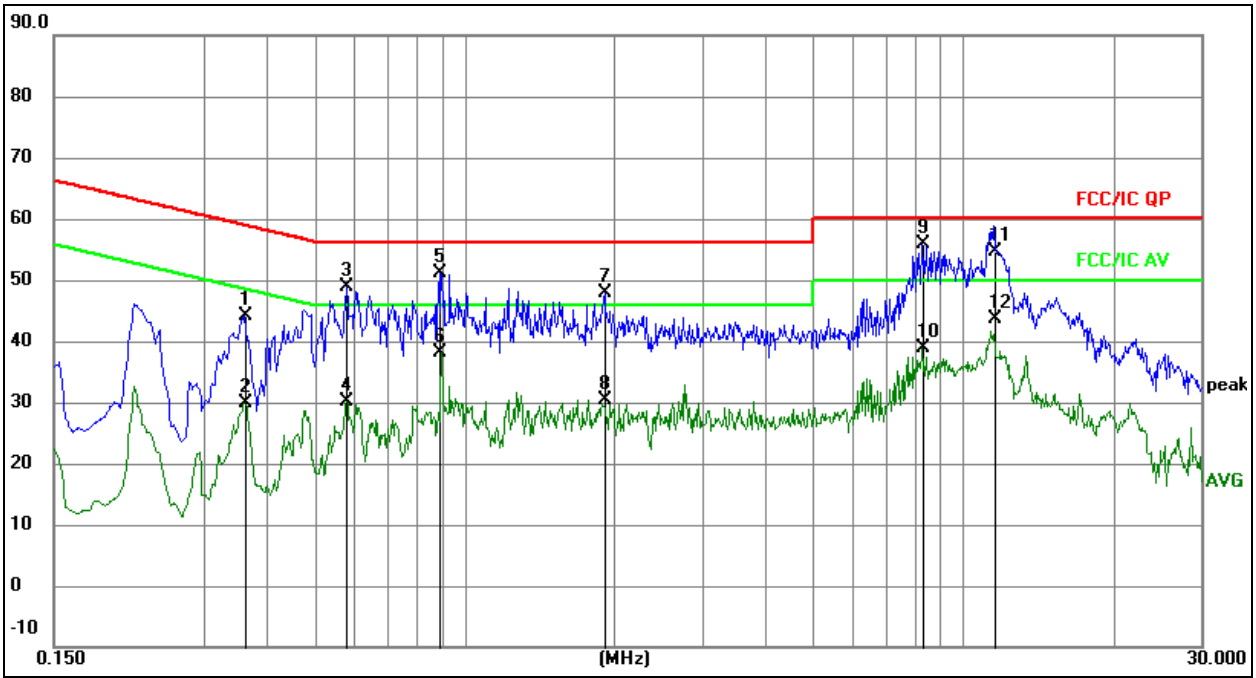

Remark:
1. All readings are Quasi-Peak and Average values.
2. Factor = Insertion Loss + Cable Loss.
3. Measurement=Reading Level+ Correct Factor
4. Over=Measurement-Limit

No.	Mk.	Freq.	Reading Level	Correct Factor	Measure-ment	Limit	Over	
		MHz		dB	dBuV	dBuV	dB	Detector
1		0.3615	24.07	20.08	44.15	58.69	-14.54	QP
2		0.3615	9.84	20.08	29.92	48.69	-18.77	AVG
3		0.5792	28.79	20.08	48.87	56.00	-7.13	QP
4		0.5792	10.08	20.08	30.16	46.00	-15.84	AVG
5		0.8944	31.04	20.09	51.13	56.00	-4.87	QP
6		0.8944	18.12	20.09	38.21	46.00	-7.79	AVG
7		1.9080	27.85	20.10	47.95	56.00	-8.05	QP
8		1.9080	10.22	20.10	30.32	46.00	-15.68	AVG
9	*	8.2789	35.75	20.16	55.91	60.00	-4.09	QP
10		8.2789	18.63	20.16	38.79	50.00	-11.21	AVG
11		11.5190	34.36	20.21	54.57	60.00	-5.43	QP
12		11.5190	23.39	20.21	43.60	50.00	-6.40	AVG

Temperature:	26 ℃	Relative Humidity:	54%
Pressure:	101KPa	Phase :	N
Test Mode:	Mode 4	Test Voltage :	DC 3.3V

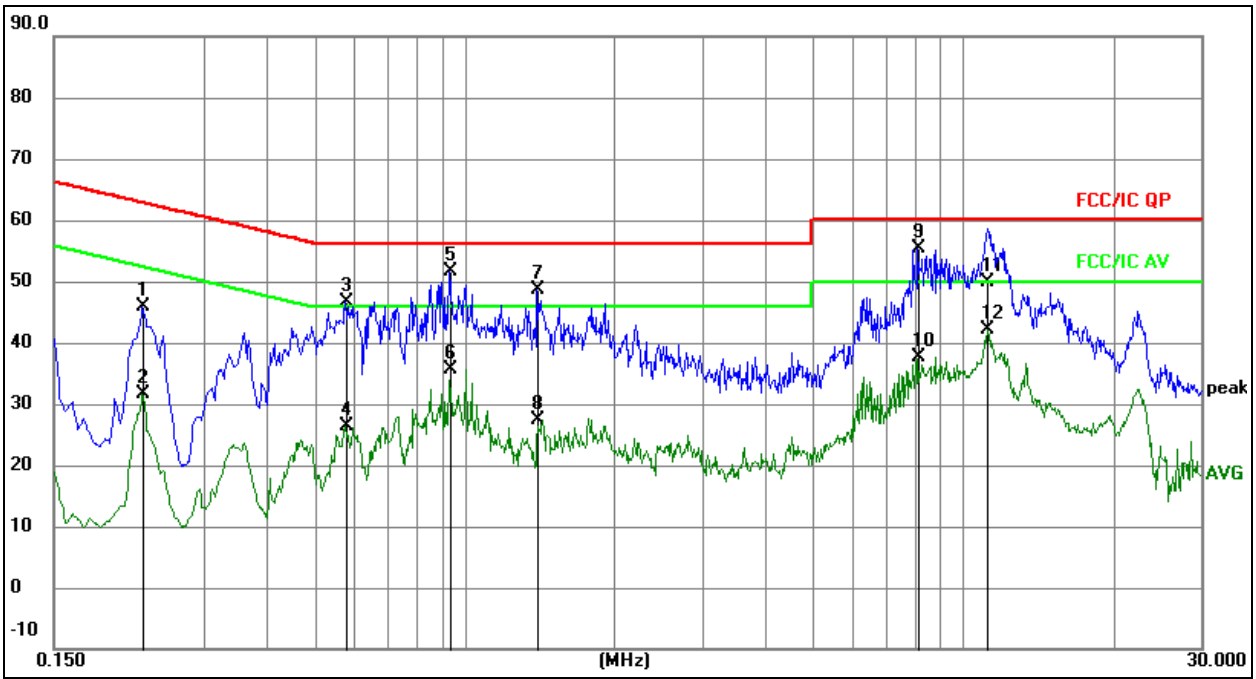

Remark:
1. All readings are Quasi-Peak and Average values.
2. Factor = Insertion Loss + Cable Loss.
3. Measurement=Reading Level+ Correct Factor
4. Over=Measurement-Limit

No.	Mk.	Freq.	Reading Level	Correct Factor	Measure-ment	Limit	Over	
		MHz		dB	dBuV	dBuV	dB	Detector
1		0.2265	25.87	20.07	45.94	62.58	-16.64	QP
2		0.2265	11.54	20.07	31.61	52.58	-20.97	AVG
3		0.5775	26.43	20.08	46.51	56.00	-9.49	QP
4		0.5775	6.37	20.08	26.45	46.00	-19.55	AVG
5	*	0.9375	31.43	20.09	51.52	56.00	-4.48	QP
6		0.9375	15.58	20.09	35.67	46.00	-10.33	AVG
7		1.4010	28.60	20.09	48.69	56.00	-7.31	QP
8		1.4010	7.34	20.09	27.43	46.00	-18.57	AVG
9		8.1420	35.22	20.16	55.38	60.00	-4.62	QP
10		8.1420	17.45	20.16	37.61	50.00	-12.39	AVG
11		11.1950	29.60	20.20	49.80	60.00	-10.20	QP
12		11.1950	21.98	20.20	42.18	50.00	-7.82	AVG

7. Radiated emissions

7.1 Block Diagram Of Test Setup

（A）Radiated Emission Test-Up Frequency Below 30MHz

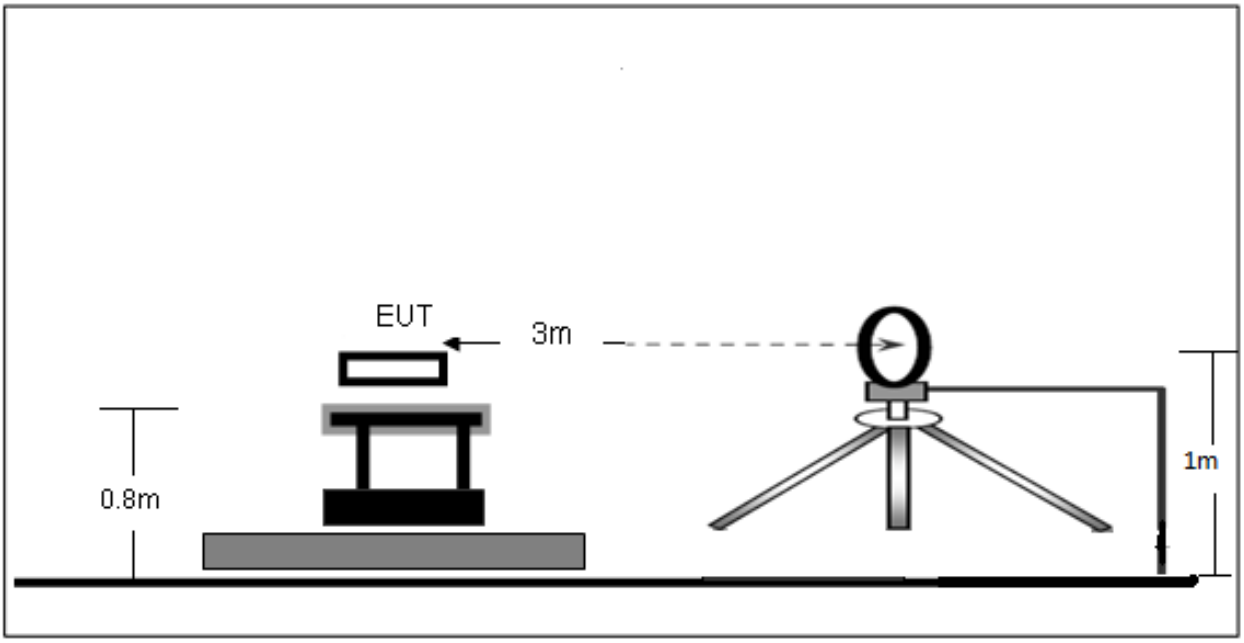

（B）Radiated Emission Test-Up Frequency 30MHz~1GHz

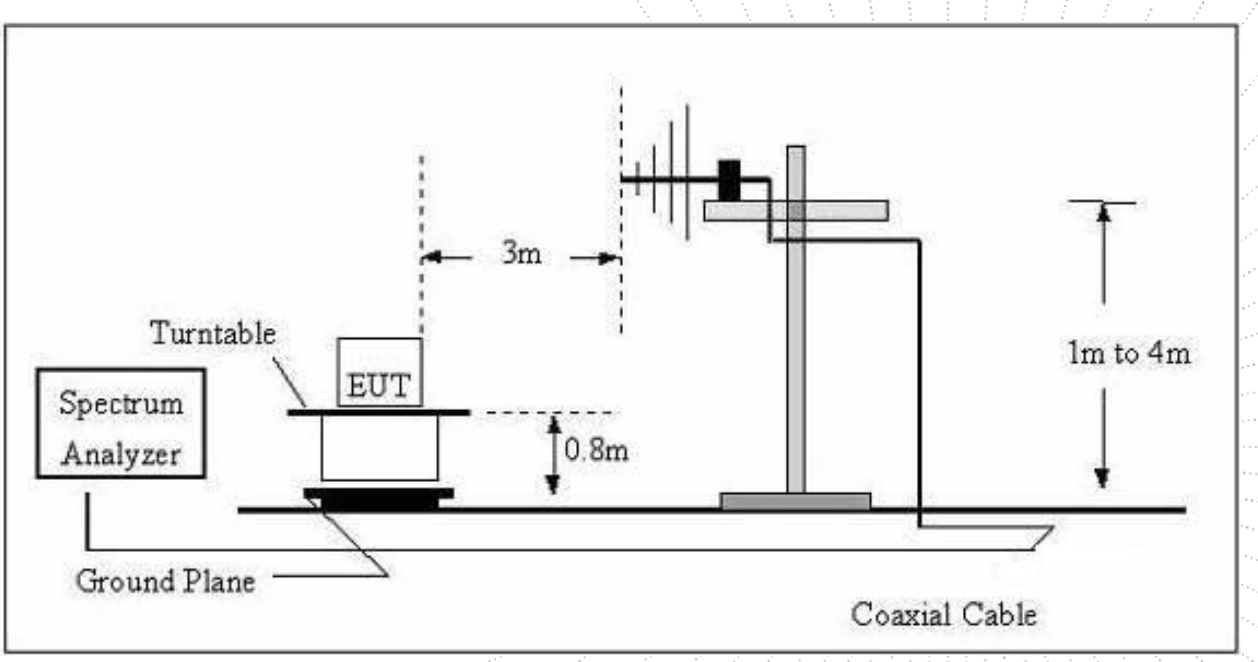

（C）Radiated Emission Test-Up Frequency Above 1GHz

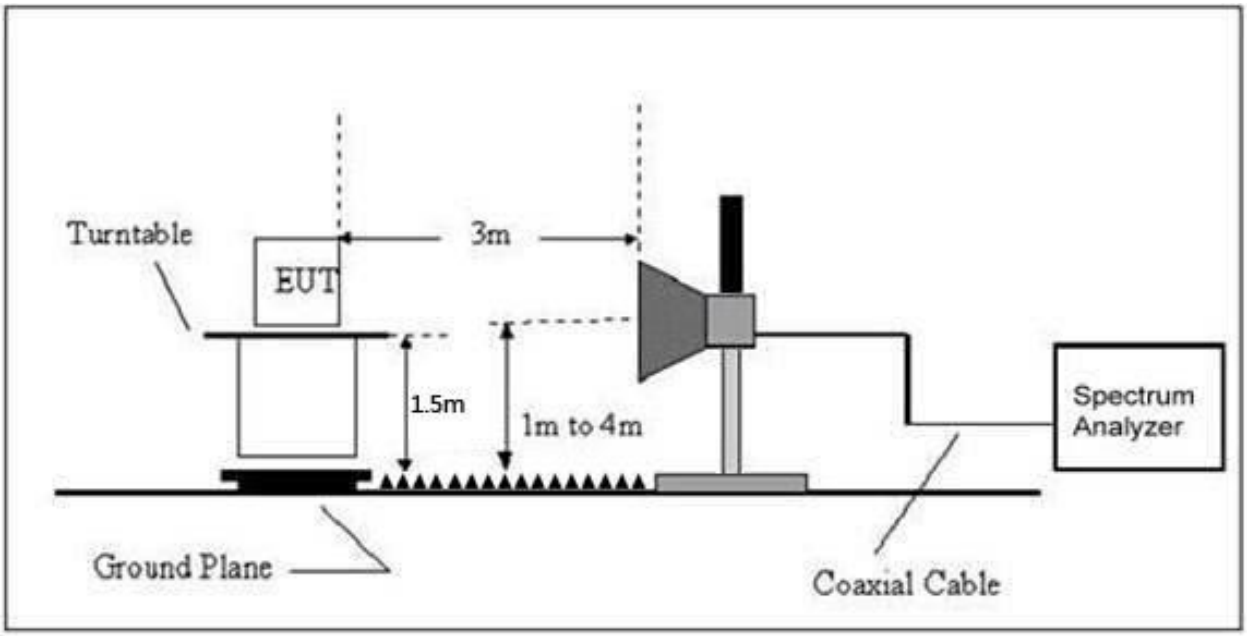

7.2 Limit

20dBc in any 100 kHz bandwidth outside the operating frequency band. In case the emission fall within the restricted band specified on 15.205(a), then the 15.209(a) limit in the table below has to be followed.

Frequency	Field Strength	Distance	Field Strength Limit at 3m Distance	
(MHz)	uV/m	(m)	uV/m	dBuV/m
0.009 ~ 0.490	2400/F(kHz)	300	10000 * 2400/F(kHz)	$20\log^{(2400/F(kHz))} + 80$
0.490 ~ 1.705	24000/F(kHz)	30	100 * 24000/F(kHz)	$20\log^{(24000/F(kHz))} + 40$
1.705 ~ 30	30	30	100 * 30	$20\log^{(30)} + 40$
30 ~ 88	100	3	100	$20\log^{(100)}$
88 ~ 216	150	3	150	$20\log^{(150)}$
216 ~ 960	200	3	200	$20\log^{(200)}$
Above 960	500	3	500	$20\log^{(500)}$

Limits Of Radiated Emission Measurement (Above 1000MHz)

Frequency (MHz)	Limit (dBuV/m) (at 3M)	
	Peak	Average
Above 1000	74	54

Notes:
(1) The limit for radiated test was performed according to FCC PART 15C
(2) The tighter limit applies at the band edges.
(3) Emission level (dBuV/m)=20log Emission level (uV/m).

Frequency Range Of Radiated Measurement

(a) For an intentional radiator the spectrum shall be investigated from the lowest radio frequency signal generated in the device, without going below 9 kHz, up to at least the frequency shown in this paragraph:

(1) If the intentional radiator operates below 10 GHz: to the tenth harmonic of the highest fundamental frequency or to 40 GHz, whichever is lower.
(2) If the intentional radiator operates at or above 10 GHz and below 30 GHz: to the fifth harmonic of the highest fundamental frequency or to 100 GHz, whichever is lower.
(3) If the intentional radiator operates at or above 30 GHz: to the fifth harmonic of the highest fundamental frequency or to 200 GHz, whichever is lower, unless specified otherwise elsewhere in the rules.
(4) If the intentional radiator operates at or above 95 GHz: To the third harmonic of the highest fundamental frequency or to 750 GHz, whichever is lower, unless specified otherwise elsewhere in the rules.
(5) If the intentional radiator contains a digital device, regardless of whether this digital device controls the functions of the intentional radiator or the digital device is used for additional control or function purposes other than to enable the operation of the intentional radiator, the frequency range shall be investigated up to the range specified in paragraphs (a) (1)through (4) of this section or the range applicable to the digital device, as shown in paragraph (b)(1) of this section, whichever is the higher frequency range of investigation.

7.3 Test procedure

Receiver Parameter	Setting
Attenuation	Auto
9kHz~150kHz	RBW 200Hz for QP
150kHz~30MHz	RBW 9kHz for QP
30MHz~1000MHz	RBW 120kHz for QP

Spectrum Parameter	Setting
1-25GHz	RBW 1 MHz /VBW 1 MHz for Peak, RBW 1 MHz / VBW 10Hz for Average

Below 1GHz test procedure as below:
a. The EUT was placed on the top of a rotating table 0.8 meters above the ground at a 3 meter semi-anechoic camber. The table was rotated 360 degrees to determine the position of the highest radiation.
b. The EUT was set 3 meters away from the interference-receiving antenna, which was mounted on the top of a variable-height antenna tower.
c. The antenna height is varied from one meter to four meters above the ground to determine the maximum value of the field strength. Both horizontal and vertical polarizations of the antenna are set to make the measurement.
d. For each suspected emission, the EUT was arranged to its worst case and then the antenna was tuned to heights from 1 meter to 4 meters (for the test frequency of below 30MHz, the antenna was tuned to heights 1 meter) and the rotatable table was turned from 0 degrees to 360 degrees to find the maximum reading.
e. The test-receiver system was set to Peak Detect Function and Specified Bandwidth with Maximum Hold Mode.
f. If the emission level of the EUT in peak mode was 10dB lower than the limit specified, then testing could be stopped and the peak values of the EUT would be reported. Otherwise the emissions that did not have 10dB margin would be re-tested one by one using peak, quasi-peak or average method as specified and then reported in a data sheet.

Above 1GHz test procedure as below:

a. The EUT was placed on the top of a rotating table 1.5 meters above the ground at a 3 meter camber. The table was rotated 360 degrees to determine the position of the highest radiation.
b. The EUT was set 3 meters away from the interference-receiving antenna, which was mounted on the top of a variable-height antenna tower.
c. The antenna height is varied from one meter to four meters above the ground to determine the maximum value of the field strength. Both horizontal and vertical polarizations of the antenna are set to make the measurement.
d. For each suspected emission, the EUT was arranged to its worst case and then the antenna was tuned to heights from 1 meter to 4 meters and the rota table was turned from 0 degrees to 360 degrees to find the maximum reading.
e. The test-receiver system was set to Peak Detect Function and Specified Bandwidth with Maximum Hold Mode.
f. If the emission level of the EUT in peak mode was 10dB lower than the limit specified, then testing could be stopped and the peak values of the EUT would be reported. Otherwise the emissions that did not have 10dB margin would be re-tested one by one using peak, quasi-peak or average method as specified and then reported in a data sheet.
g. Test the EUT in the lowest channel, the middlest channel, the Highest channel.
Note:
Both horizontal and vertical antenna polarities were tested and performed pretest to three orthogonal axis. The worst case emissions were reported.

7.4 EUT operating Conditions

The EUT was configured for testing in a typical fashion (as a customer would normally use it). The EUT has been programmed to continuously transmit during test. This operating condition was tested and used to collect the included data.

7.5 Test Result

Below 30MHz

Temperature:	26 ℃	Relative Humidity:	54%
Pressure:	101KPa	Test Voltage:	DC 3.3V
Test Mode:	Mode 4	Polarization :	--

Freq. (MHz)	Reading (dBuV/m)	Limit (dBuV/m)	Margin (dB)	State P/F
--	--	--	--	PASS
--	--	--	--	PASS

Note:
The amplitude of spurious emissions which are attenuated by more than 20dB below the permissible value has no need to be reported.
Distance extrapolation factor =40 log (specific distance/test distance)(dB);
Limit line = specific limits(dBuv) + distance extrapolation factor.

Between 30MHz – 1GHz

Temperature:	26 ℃	Relative Humidity:	54%
Pressure:	101KPa	Phase :	Horizontal
Test Mode:	Mode 4	Test Voltage:	DC 3.3V

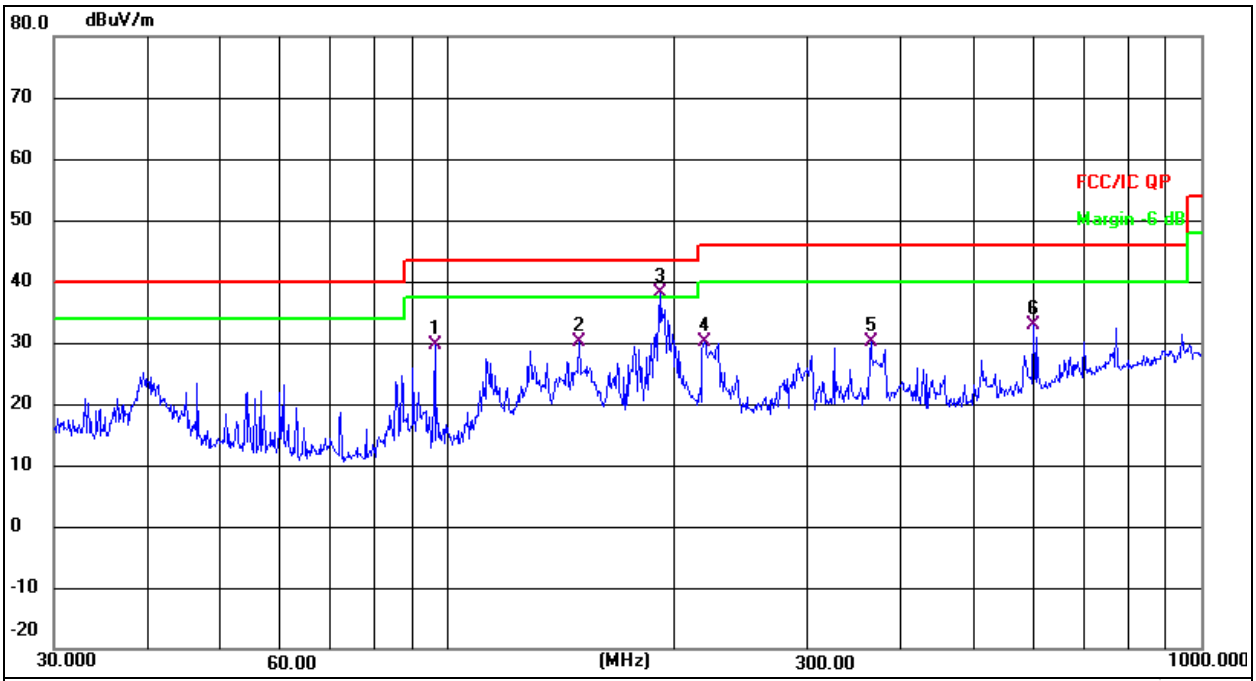

Remark:
1.Factor = Antenna Factor + Cable Loss – Pre-amplifier.
2. Measurement=Reading Level+ Correct Factor
3. Over=Measurement-Limit

No.	Frequency (MHz)	Reading (dBuV)	Factor (dB/m)	Level (dBuV/m)	Limit (dBuV/m)	Margin (dB)	Detector
1	96.0986	45.16	-15.43	29.73	43.50	-13.77	QP
2	149.4857	41.09	-10.94	30.15	43.50	-13.35	QP
3 *	191.7450	52.22	-13.99	38.23	43.50	-5.27	QP
4	219.0753	44.07	-13.84	30.23	46.00	-15.77	QP
5	364.2595	38.92	-8.67	30.25	46.00	-15.75	QP
6	599.3212	35.45	-2.62	32.83	46.00	-13.17	QP

Temperature:	26 ℃	Relative Humidity:	54%
Pressure:	101KPa	Phase :	Vertical
Test Mode:	Mode 4	Test Voltage:	DC 3.3V

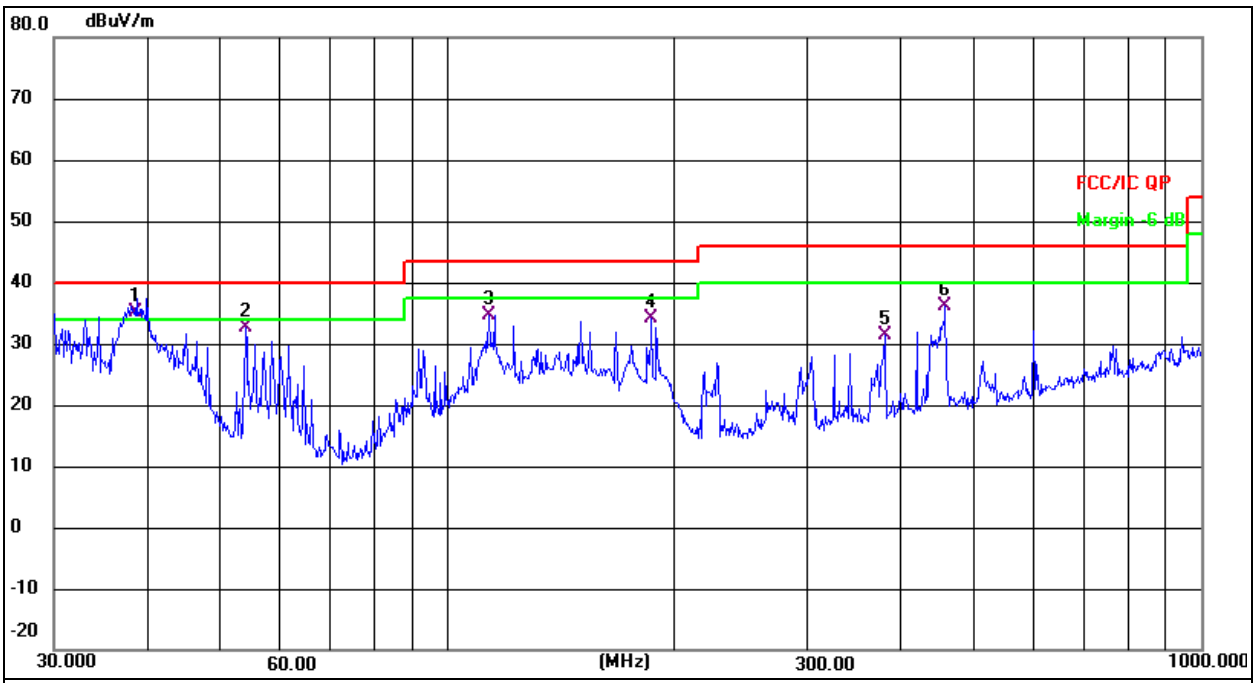

Remark:
1.Factor = Antenna Factor + Cable Loss – Pre-amplifier.
2. Measurement=Reading Level+ Correct Factor
3. Over=Measurement-Limit

No.	Frequency (MHz)	Reading (dBuV)	Factor (dB/m)	Level (dBuV/m)	Limit (dBuV/m)	Margin (dB)	Detector
1 *	38.6160	48.03	-12.82	35.21	40.00	-4.79	QP
2	53.8818	46.51	-13.93	32.58	40.00	-7.42	QP
3	113.3163	48.75	-14.05	34.70	43.50	-8.80	QP
4	186.4409	47.82	-13.60	34.22	43.50	-9.28	QP
5	379.9141	39.59	-8.20	31.39	46.00	-14.61	QP
6	457.5073	42.33	-6.22	36.11	46.00	-9.89	QP

Between 1GHz – 25GHz

Polar (H/V)	Fre-quency (MHz)	Reading Level (dBuV/m)	Correct Factor (dB)	Measure-ment (dBuV/m)	Limits (dBuV/m)	Over (dB)	Detector Type
GFSK Low channel							
V	4804.00	69.56	-19.99	49.57	74.00	-24.43	PK
V	4804.00	54.07	-19.99	34.08	54.00	-19.92	AV
V	7206.00	69.86	-14.22	55.64	74.00	-18.36	PK
V	7206.00	53.27	-14.22	39.05	54.00	-14.95	AV
H	4804.00	67.26	-19.99	47.27	74.00	-26.73	PK
H	4804.00	54.65	-19.99	34.66	54.00	-19.34	AV
H	7206.00	69.43	-14.22	55.21	74.00	-18.79	PK
H	7206.00	53.46	-14.22	39.24	54.00	-14.76	AV
GFSK Middle channel							
V	4882.00	67.17	-19.84	47.33	74.00	-26.67	PK
V	4882.00	52.67	-19.84	32.83	54.00	-21.17	AV
V	7323.00	69.76	-13.90	55.86	74.00	-18.14	PK
V	7323.00	53.63	-13.90	39.73	54.00	-14.27	AV
H	4882.00	69.26	-19.84	49.42	74.00	-24.58	PK
H	4882.00	52.71	-19.84	32.87	54.00	-21.13	AV
H	7323.00	68.91	-13.90	55.01	74.00	-18.99	PK
H	7323.00	54.57	-13.90	40.67	54.00	-13.33	AV
GFSK High channel							
V	4960.00	67.14	-19.68	47.46	74.00	-26.54	PK
V	4960.00	53.27	-19.68	33.59	54.00	-20.41	AV
V	7440.00	69.57	-13.57	56.00	74.00	-18.00	PK
V	7440.00	54.81	-13.57	41.24	54.00	-12.76	AV
H	4960.00	69.17	-19.68	49.49	74.00	-24.51	PK
H	4960.00	53.40	-19.68	33.72	54.00	-20.28	AV
H	7440.00	69.33	-13.57	55.76	74.00	-18.24	PK
H	7440.00	54.43	-13.57	40.86	54.00	-13.14	AV

Remark:
1. Measurement = Reading Level + Correct Factor,
Correct Factor = Antenna Factor + Cable Loss – Pre-amplifier,
Over= Measurement – Limit
2.If peak below the average limit, the average emission was no test.
3. In restricted bands of operation, The spurious emissions below the permissible value more than 20dB
4. The amplitude of spurious emissions which are attenuated by more than 20dB below the permissible value has no need to be reported.

Polar (H/V)	Fre-quency (MHz)	Reading Level (dBuV/m)	Correct Factor (dB)	Measure-ment (dBuV/m)	Limits (dBuV/m)	Over (dB)	Detector Type
π /4DQPSK Low channel							
V	4804.00	67.82	-19.99	47.83	74.00	-26.17	PK
V	4804.00	54.54	-19.99	34.55	54.00	-19.45	AV
V	7206.00	68.77	-14.22	54.55	74.00	-19.45	PK
V	7206.00	52.01	-14.22	37.79	54.00	-16.21	AV
H	4804.00	67.57	-19.99	47.58	74.00	-26.42	PK
H	4804.00	52.84	-19.99	32.85	54.00	-21.15	AV
H	7206.00	67.63	-14.22	53.41	74.00	-20.59	PK
H	7206.00	53.39	-14.22	39.17	54.00	-14.83	AV
π /4DQPSK Middle channel							
V	4882.00	69.14	-19.84	49.30	74.00	-24.70	PK
V	4882.00	52.84	-19.84	33.00	54.00	-21.00	AV
V	7323.00	67.86	-13.90	53.96	74.00	-20.04	PK
V	7323.00	54.86	-13.90	40.96	54.00	-13.04	AV
H	4882.00	69.16	-19.84	49.32	74.00	-24.68	PK
H	4882.00	54.78	-19.84	34.94	54.00	-19.06	AV
H	7323.00	68.48	-13.90	54.58	74.00	-19.42	PK
H	7323.00	52.19	-13.90	38.29	54.00	-15.71	AV
π /4DQPSK High channel							
V	4960.00	69.46	-19.68	49.78	74.00	-24.22	PK
V	4960.00	53.71	-19.68	34.03	54.00	-19.97	AV
V	7440.00	69.66	-13.57	56.09	74.00	-17.91	PK
V	7440.00	52.53	-13.57	38.96	54.00	-15.04	AV
H	4960.00	68.26	-19.68	48.58	74.00	-25.42	PK
H	4960.00	54.76	-19.68	35.08	54.00	-18.92	AV
H	7440.00	69.34	-13.57	55.77	74.00	-18.23	PK
H	7440.00	53.65	-13.57	40.08	54.00	-13.92	AV

Remark:
1. Measurement = Reading Level + Correct Factor,
Correct Factor = Antenna Factor + Cable Loss – Pre-amplifier,
Over= Measurement – Limit
2.If peak below the average limit, the average emission was no test.
3. In restricted bands of operation, The spurious emissions below the permissible value more than 20dB
4. The amplitude of spurious emissions which are attenuated by more than 20dB below the permissible value has no need to be reported.

Polar (H/V)	Fre-quency (MHz)	Reading Level (dBuV/m)	Correct Factor (dB)	Measure-ment (dBuV/m)	Limits (dBuV/m)	Over (dB)	Detector Type
8DPSK Low channel							
V	4804.00	69.38	-19.99	49.39	74.00	-24.61	PK
V	4804.00	52.02	-19.99	32.03	54.00	-21.97	AV
V	7206.00	67.72	-14.22	53.50	74.00	-20.50	PK
V	7206.00	54.81	-14.22	40.59	54.00	-13.41	AV
H	4804.00	69.62	-19.99	49.63	74.00	-24.37	PK
H	4804.00	54.34	-19.99	34.35	54.00	-19.65	AV
H	7206.00	69.40	-14.22	55.18	74.00	-18.82	PK
H	7206.00	54.77	-14.22	40.55	54.00	-13.45	AV
8DPSK Middle channel							
V	4882.00	68.84	-19.84	49.00	74.00	-25.00	PK
V	4882.00	54.89	-19.84	35.05	54.00	-18.95	AV
V	7323.00	67.65	-13.90	53.75	74.00	-20.25	PK
V	7323.00	52.57	-13.90	38.67	54.00	-15.33	AV
H	4882.00	70.00	-19.84	50.16	74.00	-23.84	PK
H	4882.00	52.37	-19.84	32.53	54.00	-21.47	AV
H	7323.00	69.09	-13.90	55.19	74.00	-18.81	PK
H	7323.00	54.45	-13.90	40.55	54.00	-13.45	AV
8DPSK High channel							
V	4960.00	67.24	-19.68	47.56	74.00	-26.44	PK
V	4960.00	52.50	-19.68	32.82	54.00	-21.18	AV
V	7440.00	69.45	-13.57	55.88	74.00	-18.12	PK
V	7440.00	52.79	-13.57	39.22	54.00	-14.78	AV
H	4960.00	69.29	-19.68	49.61	74.00	-24.39	PK
H	4960.00	54.64	-19.68	34.96	54.00	-19.04	AV
H	7440.00	68.48	-13.57	54.91	74.00	-19.09	PK
H	7440.00	53.24	-13.57	39.67	54.00	-14.33	AV

Remark:
1. Measurement = Reading Level + Correct Factor,
Correct Factor = Antenna Factor + Cable Loss – Pre-amplifier,
Over= Measurement – Limit
2. If peak below the average limit, the average emission was no test.
3. In restricted bands of operation, The spurious emissions below the permissible value more than 20dB
4. The amplitude of spurious emissions which are attenuated by more than 20dB below the permissible value has no need to be reported.

8. Radiated Band Emission Measurement And Restricted Bands Of Operation

8.1 Block Diagram Of Test Setup

Radiated Emission Test-Up Frequency Above 1GHz

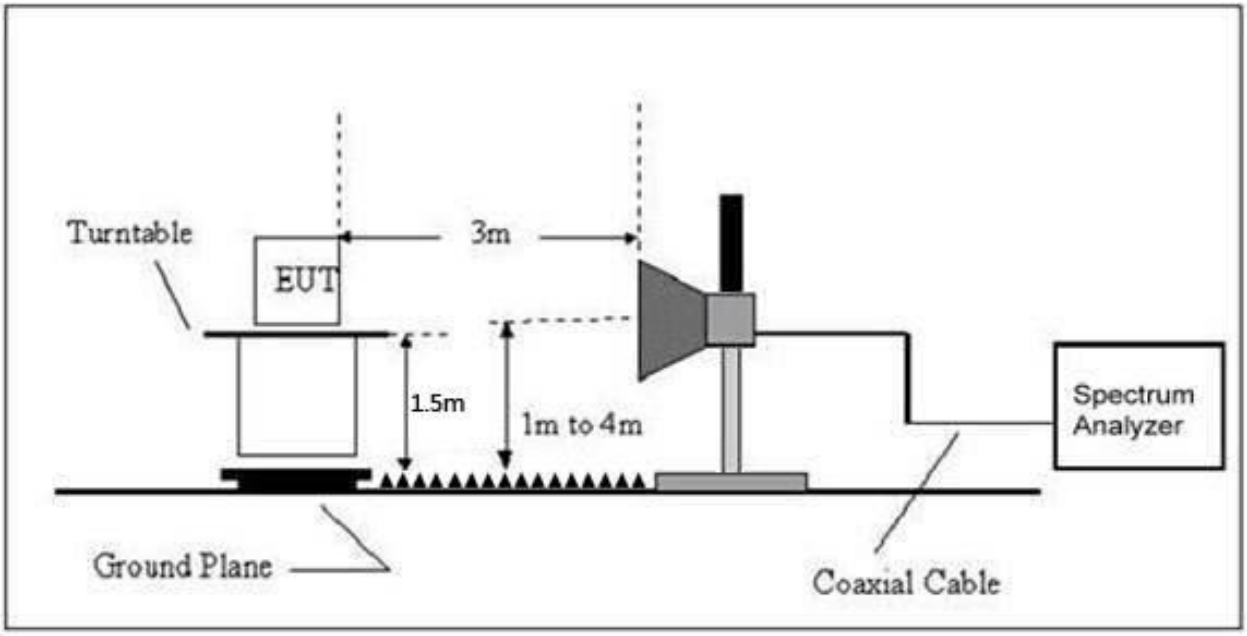

8.2 Limit

FCC Part15 C Section 15.209 and 15.205

(a) Except as shown in paragraph (d) of this section, only spurious emissions are permitted in any of the frequency bands listed below:

MHz	MHz	MHz	GHz
0.090-0.110	16.42-16.423	399.9-410	4.5-5.15
[1]0.495-0.505	16.69475-16.69525	608-614	5.35-5.46
2.1735-2.1905	16.80425-16.80475	960-1240	7.25-7.75
4.125-4.128	25.5-25.67	1300-1427	8.025-8.5
4.17725-4.17775	37.5-38.25	1435-1626.5	9.0-9.2
4.20725-4.20775	73-74.6	1645.5-1646.5	9.3-9.5
6.215-6.218	74.8-75.2	1660-1710	10.6-12.7
6.26775-6.26825	108-121.94	1718.8-1722.2	13.25-13.4
6.31175-6.31225	123-138	2200-2300	14.47-14.5
8.291-8.294	149.9-150.05	2310-2390	15.35-16.2
8.362-8.366	156.52475-156.52525	2483.5-2500	17.7-21.4
8.37625-8.38675	156.7-156.9	2690-2900	22.01-23.12
8.41425-8.41475	162.0125-167.17	3260-3267	23.6-24.0
12.29-12.293	167.72-173.2	3332-3339	31.2-31.8
12.51975-12.52025	240-285	3345.8-3358	36.43-36.5
12.57675-12.57725	322-335.4	3600-4400	([2])
13.36-13.41			

Limits Of Radiated Emission Measurement (Above 1000MHz)

Frequency (MHz)	Limit (dBuV/m) (at 3M)	
	Peak	Average
Above 1000	74	54

Notes:
(1) The limit for radiated test was performed according to FCC PART 15C.
(2) The tighter limit applies at the band edges.
(3) Emission level (dBuV/m)=20log Emission level (uV/m).

8.3 Test procedure

Receiver Parameter	Setting
Attenuation	Auto
Start Frequency	2300MHz
Stop Frequency	2520
RB / VB (Emission In Restricted Band)	1 MHz / 1 MHz for Peak, 1 MHz / 10Hz for Average

Above 1GHz test procedure as below:
a. The EUT was placed on the top of a rotating table 1.5 meters above the ground at a 3 meter camber. The table was rotated 360 degrees to determine the position of the highest radiation.
b. The EUT was set 3 meters away from the interference-receiving antenna, which was mounted on the top of a variable-height antenna tower.
c. The antenna height is varied from one meter to four meters above the ground to determine the maximum value of the field strength. Both horizontal and vertical polarizations of the antenna are set to make the measurement.
d. For each suspected emission, the EUT was arranged to its worst case and then the antenna was tuned to heights from 1 meter to 4 meters and the rota table was turned from 0 degrees to 360 degrees to find the maximum reading.
e. The test-receiver system was set to Peak Detect Function and Specified Bandwidth with Maximum Hold Mode.
f. If the emission level of the EUT in peak mode was 10dB lower than the limit specified, then testing could be stopped and the peak values of the EUT would be reported. Otherwise the emissions that did not have 10dB margin would be re-tested one by one using peak, quasi-peak or average method as specified and then reported in a data sheet.
g. Test the EUT in the lowest channel, the middlest channel, the Highest channel.

Note:
Both horizontal and vertical antenna polarities were tested and performed pretest to three orthogonal axis. The worst case emissions were reported.

8.4 EUT operating Conditions

The EUT was configured for testing in a typical fashion (as a customer would normally use it). The EUT has been programmed to continuously transmit during test. This operating condition was tested and used to collect the included data.

8.5 Test Result

	Polar (H/V)	Fre-quency (MHz)	Reading Level (dBuV/m)	Correct Factor (dB)	Measure-ment (dBuV/m)	Limits (dBuV/m)		Result
					PK	PK	AV	
GFSK	Low Channel 2402MHz							
	H	2390.00	70.65	-25.43	45.22	74.00	54.00	PASS
	H	2400.00	73.56	-25.40	48.16	74.00	54.00	PASS
	V	2390.00	73.99	-25.43	48.56	74.00	54.00	PASS
	V	2400.00	74.59	-25.40	49.19	74.00	54.00	PASS
	High Channel 2480MHz							
	H	2483.50	74.92	-25.15	49.77	74.00	54.00	PASS
	H	2500.00	72.57	-25.10	47.47	74.00	54.00	PASS
	V	2483.50	71.02	-25.15	45.87	74.00	54.00	PASS
	V	2500.00	69.19	-25.10	44.09	74.00	54.00	PASS
π /4DQPSK	Low Channel 2402MHz							
	H	2390.00	71.59	-25.43	46.16	74.00	54.00	PASS
	H	2400.00	71.08	-25.40	45.68	74.00	54.00	PASS
	V	2390.00	74.72	-25.43	49.29	74.00	54.00	PASS
	V	2400.00	76.56	-25.40	51.16	74.00	54.00	PASS
	High Channel 2480MHz							
	H	2483.50	76.15	-25.15	51.00	74.00	54.00	PASS
	H	2500.00	73.52	-25.10	48.42	74.00	54.00	PASS
	V	2483.50	73.13	-25.15	47.98	74.00	54.00	PASS
	V	2500.00	70.67	-25.10	45.57	74.00	54.00	PASS
8DPSK	Low Channel 2402MHz							
	H	2390.00	71.68	-25.43	46.25	74.00	54.00	PASS
	H	2400.00	71.07	-25.40	45.67	74.00	54.00	PASS
	V	2390.00	73.21	-25.43	47.78	74.00	54.00	PASS
	V	2400.00	76.45	-25.40	51.05	74.00	54.00	PASS
	High Channel 2480MHz							
	H	2483.50	74.44	-25.15	49.29	74.00	54.00	PASS
	H	2500.00	73.21	-25.10	48.11	74.00	54.00	PASS
	V	2483.50	73.02	-25.15	47.87	74.00	54.00	PASS
	V	2500.00	70.53	-25.10	45.43	74.00	54.00	PASS

Remark:
1. Measurement = Reading Level + Correct Factor,
Correct Factor = Antenna Factor + Cable Loss – Pre-amplifier,
Over= Measurement - Limit
2. If the PK measured levels comply with average limit, then the average level were deemed to comply with average limit.
3 In restricted bands of operation, The spurious emissions below the permissible value more than 20dB
4. The amplitude of spurious emissions which are attenuated by more than 20dB below the permissible value has no need to be reported.

9. Antenna Requirement

9.1 Limit

15.203 requirement: For intentional device, according to 15.203: an intentional radiator shall be designed to ensure that no antenna other than that furnished by the responsible party shall be used with the device.

9.2 Test Result

The EUT antenna is External antenna, fulfill the requirement of this section.

10. EUT Photographs

EUT Photo 1

EUT Photo 2

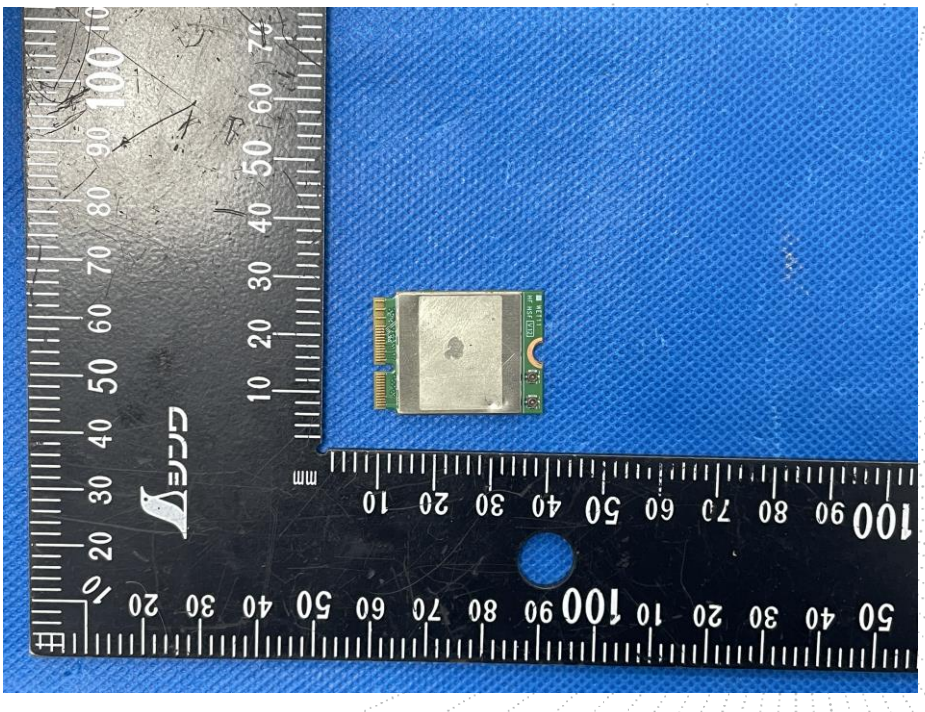

NOTE: Appendix-Photographs Of EUT Constructional Details.

11. EUT Test Setup Photographs

Conducted Emissions Photo

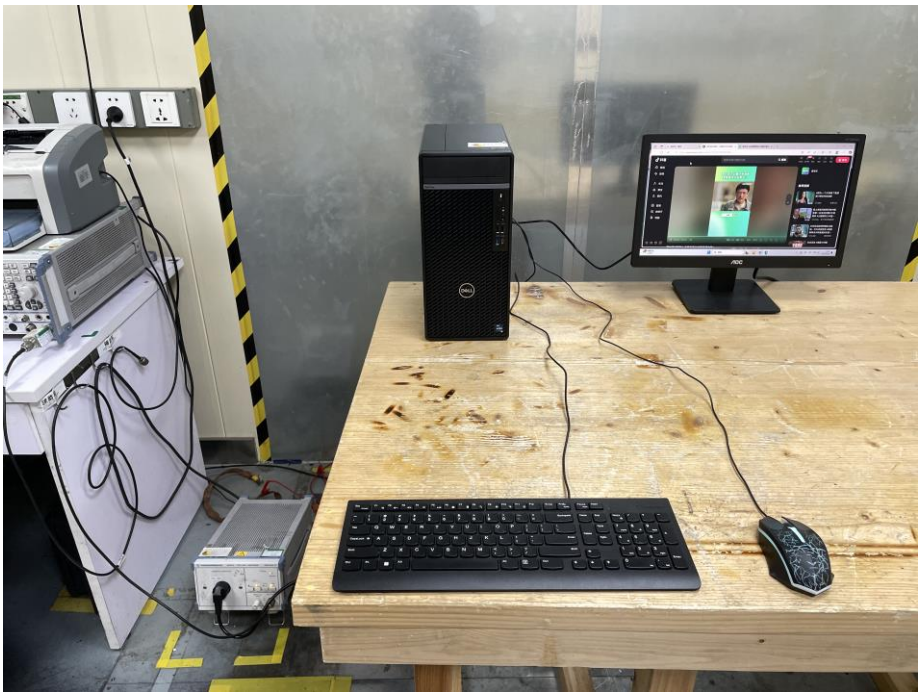

Radiated Measurement Photos

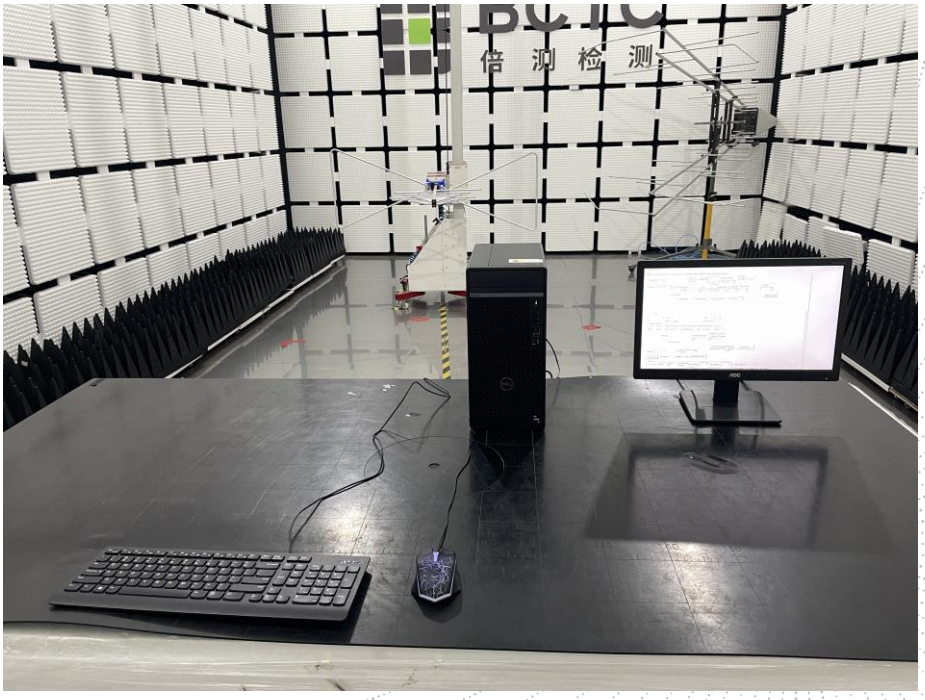

BCT
倍 测 检

STATEMENT

1. The equipment lists are traceable to the national reference standards.

2. The test report can not be partially copied unless prior written approval is issued from our lab.

3. The test report is invalid without the "special seal for inspection and testing".

4. The test report is invalid without the signature of the approver.

5. The test process and test result is only related to the Unit Under Test.

6. Sample information is provided by the client and the laboratory is not responsible for its authenticity.

7. The quality system of our laboratory is in accordance with ISO/IEC17025.

8. If there is any objection to this test report, the client should inform issuing laboratory within 15 days from the date of receiving test report.

Address:
1-2/F., Building B, Pengzhou Industrial Park, No.158, Fuyuan 1st Road, Zhancheng, Fuhai Subdistrict, Bao'an District, Shenzhen, Guangdong, China

TEL: 400-788-9558

P.C.: 518103

FAX: 0755-33229357

Website: http://www.chnbctc.com

Consultation E-mail: bctc@bctc-lab.com.cn

Complaint/Advice E-mail: advice@bctc-lab.com.cn

※※※※※ END ※※※※※