RF EXPOSURE Test Report

Product: Magnetic Wireless Power Bank

Trade Mark: UGREEN

Model Number: PB761

FCC ID: 2AQI5-PB761D

Prepared for

Ugreen Group Limited

Ugreen Building, Longcheng Industrial Park, Longguanxi Road, Longhua, ShenZhen, China

Prepared by

Shenzhen HongBiao Certification& Testing Co., Ltd

Room 102, 201, Building 2, Yuanwanggu RFID Industrial Park, Tongguan Road, Tianliao Community, Yutang Street, Guangming District, Shenzhen, China

Tel.: +86-755-2998 9321 Fax.: +86-755-2998 5110

Website: http://www.sz-hongbiao.com

Table of Contents

1 GENERAL DESCRIPTION 5

1.1 DESCRIPTION OF EUT 5
1.2 TEST MODE 5
1.3 TEST SETUP 6
1.4 ANCILLARY EQUIPMENT 6
1.5 COIL SIZE 6
1.6 COIL SPECIFICATIONS 7
1.7 THE DISTANCE FROM THE ANTENNA TO EACH SURFACE OF THE PRODUCT CASING 7

2 TEST FACILITIES AND ACCREDITATIONS 8

2.1 TEST LABORATORY 8
2.2 ENVIRONMENTAL CONDITIONS 8
2.3 MEASUREMENT UNCERTAINTY 8
2.4 TEST SOFTWARE 8

3 LIST OF TEST EQUIPMENT 9

4 RF EXPOSURE 10

4.1 MAXIMUM PERMISSIBLE EXPOSURE 10
4.1.1. Limit 10
4.1.2. Test Procedures 10
4.1.3. Test Setup 10
4.1.4. Test Result 11

TEST RESULT CERTIFICATION

Applicant's Name..... :	Ugreen Group Limited
Address ..... :	Ugreen Building, Longcheng Industrial Park, Longguanxi Road, Longhua, ShenZhen, China
Manufacturer's Name ..... :	Ugreen Group Limited
Address ..... :	Ugreen Building, Longcheng Industrial Park, Longguanxi Road, Longhua, ShenZhen, China
Product description	
Product name ..... :	Magnetic Wireless Power Bank
Model Number ..... :	PB761
Standards ..... :	FCC CFR 47 PART 1 , 1.1310
Test procedure..... :	KDB 680106 D01 Wireless Power Transfer v04

This device described above has been tested by Shenzhen HongBiao Certification& Testing Co., Ltd and the test results show that the equipment under test (EUT) is in compliance with the EMC requirements. And it is applicable only to the tested sample identified in the report.

Date of Test ..... :

Date (s) of performance of tests..... : Jan. 06, 2026~Jan. 19, 2026

Test Result..... : **Pass**

Testing Engineer : Zoe Su

(Zoe Su)

Technical Manager : Gary Lu

(Gary Lu)

Authorized Signatory : Leo Su

(Leo Su)

SHENZHEN HONGBIAO CERTIFICATION&TESTING CO., LTD
HONG BIAO 弘标认证
APPROVAL

Revision History

Revised No.	Date of Issue	Description
01	Jan. 19, 2026	Original

1 General Description

1.1 Description of EUT

Product name:	Magnetic Wireless Power Bank
Model name:	PB761
Series Model:	N/A
Different of series model:	N/A
Operation frequency:	112-148.5kHz, 360kHz
Operational mode:	Wireless charging
Modulation type:	ASK
Antenna type:	Coil Antenna
Battery:	N/A
Power supply:	USB-C(IN) Input : 5V⎓3A/9V⎓3A/12V⎓2.5A/15V⎓2A USB-C(OUT) Output: 5V⎓2.4A/5V⎓3A/9V⎓3A /12V⎓2.5A /15V⎓2A Wireless Charging Output Power: 15W Max Total Cell Capacity: 10000mAh Battery Capacity: 5000mAh (Two cells in Series) Polymer Lithium-ion Battery Rated Energy: 36Wh DC 7.2V Rated Capacity: 6000mAh (TYP 5V 2.4A)
Adapter information:	N/A

Remark:
- P/N code in the below table, for marketing purpose, will be marked on the marking plate.

35925	35925P	35925X	35925A	35925B	35925C	35925U	35925JP	35925ZD
45763	45763P	45763X	45763A	45763B	45763C	45763U	45763JP	45763ZD

1.2 Test Mode

Pretest Test Mode	Description of Mode
1	EUT + Phone (10W) (Battery Status: < 1%) Operating frequency: 112-148.5kHz
2	EUT + Phone (10W) (Battery Status: < 50%) Operating frequency: 112-148.5kHz
3	EUT + Phone (10W) (Battery Status: < 99%) Operating frequency: 112-148.5kHz
4	EUT + Phone (15W) (Battery Status: < 1%) Operating frequency: 360kHz
5	EUT + Phone (15W) (Battery Status: < 50%) Operating frequency: 360kHz

6	EUT + Phone (15W) (Battery Status: < 99%) Operating frequency: 360kHz
7	Stand-by

Note 1: All test modes were pre-tested, but we only recorded the worst case in this report.
Note 2: Based on the principle of near-field electromagnetic induction, electromagnetic field strength gradually weakens as the test distance increases. Without a corresponding increase in output power, field strength will significantly attenuate with distance. When the EUT wireless charging module is powered by an external adapter, it can only achieve wireless output powers such as 5W/7.5W/10W. Therefore, evaluating mobile usage conditions with external adapter power supply is unnecessary.

1.3 Test Setup

See photographs of the test setup in the report for the actual setup and connections between EUT and support equipment.

1.4 Ancillary Equipment

Equipment	Model	S/N	Manufacturer
Phone	MYM93LL/A	HMV3W3W19W	Apple Inc.
Phone	LE2120	98d9b780	Shenzhen Oneplus Technology Co., Ltd

1.5 Coil Size

Unit: mm

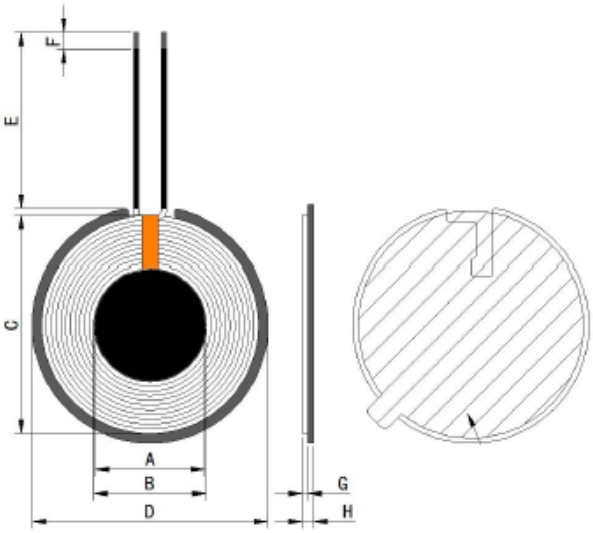

A	B	C	D	E	F	G	H
20±0.5	20.5±0.5	39.5±1	42.9±0.5	32±1	3±1	0.95±0.05	2.4MAX

1.6 Coil Specifications

Item	Parameter
Input inductance:	Transmitter 1: 8.1uH±10%
Material of enclosure(s):	Plastic
Number of turns:	Transmitter 1: 11 turns

1.7 The Distance From The Antenna To Each Surface Of the Product Casing

Location(s) – coil to the outer surface of the enclosure(s)
Transmitter 1:
Transmitter 1 to Top: 2mm
Transmitter 1 to Left: 13mm
Transmitter 1 to Right: 13mm
Transmitter 1 to Front: 10.68mm
Transmitter 1 to Back: 51mm
Transmitter 1 to Bottom: 18mm

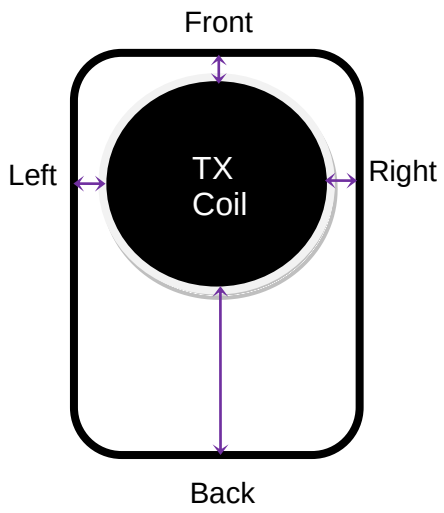

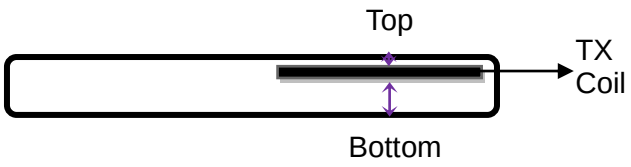

2 Test Facilities and Accreditations

2.1 Test Laboratory

Test Site	Shenzhen HongBiao Certification& Testing Co., Ltd
Test Site Location	Room 102, 201, Building 2, Yuanwanggu RFID Industrial Park, Tongguan Road, Tianliao Community, Yutang Street, Guangming District, Shenzhen, China
Telephone:	(86-755) 2998 9321
Fax:	(86-755) 2998 5110
FCC Registration No.:	CN1341
A2LA Certificate No.:	6765.01

2.2 Environmental Conditions

During the measurement the environmental conditions were within the listed ranges:

Temperature:	15ºC~35ºC
Relative Humidity:	20%~75%
Air Pressure:	98kPa~101kPa

2.3 Measurement Uncertainty

The reported uncertainty of measurement y ± U, where expended uncertainty U is based on a standard uncertainty multiplied by a coverage factor of k=2, providing a level of confidence of approximately 95 %.
The data and results quoted in this document are true and accurate values, and uncertainties are not involved in the calculations.
In addition, components and mass production processes that are similar to testing equipment may introduce additional deviations, and the manufacturer is solely responsible for the continued compliance of the equipment.

Measurement Frequency Range	U, (dB)	Note
RF frequency	$2x\ 10^{-5}$	
E-field	± 2.5 dB	
H-field	± 4.2 dB	
Temperature	±1 degree	
Humidity	± 5 %	

2.4 Test Software

Software name	Manufacturer	Model	Version
MAGPy V2.6	Schmid & Partner Engineering AG	MAGPy V2.6	V2.6

3 List of Test Equipment

Item	Equipment No.	Equipment name	Manufacturer	Model	Serial No.	Calibration date	Due date
1	HB-E077	Magnetic Amplitude and Gradient Probe System	Schmid & Partner Engineering AG	MAGPy -8H3D+E3D	3107	2024-03-15	2026-03-14
2	HB-E078	Magnetic Amplitude and Gradient Probe System	Schmid & Partner Engineering AG	MAGPy-DAS	3097	2024-03-15	2026-03-14

Note: the calibration interval of the above test instruments is 24 months and the calibrations are traceable to international system unit (SI).

4 RF Exposure

4.1 Maximum Permissible Exposure

4.1.1. Limit

Frequency range(MHz)	Electric field strength(V/m)	Magnetic field strength(A/m)	Power density(mW/cm2)	Averaging time(minutes)
(A) Limits for Occupational/Controlled Exposure				
0.3-3.0	614	1.63	*100	6
3.0-30	1842/f	4.89/f	*900/f^2	6
30-300	61.4	0.163	1.0 6	6
300-1500	/	/	f/300	6
1500-100000	/	/	5	6
(B) Limits for General Population/Uncontrolled Exposure				
0.3-1.34	614	1.63	*100	30
1.34-30	824/f	2.19/f	*180/f^2	30
30-300	27.5	0.073	0.2	30
300-1500	/	/	f/1500	30
1500-100000	/	/	1	30
f = frequency in MHz * = Plane-wave equivalent power density				

4.1.2. Test Procedures

For portable exposure conditions:

a. The RF exposure test was performed in anechoic chamber.

b. Perform H-field measurements for each edge/top surface of the host/client pair at every 2 cm, starting from as close as possible out to 20 cm.

c. The highest emission level was recorded and compared with limit.

d. The EUT was measured according to the KDB 680106 D01 Wireless Power Transfer v04.

4.1.3. Test Setup

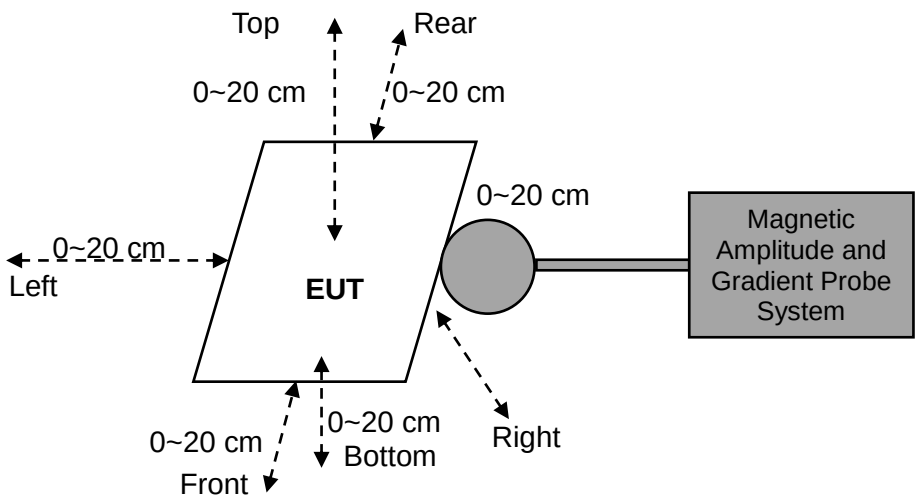

4.1.4. Test Result

For portable exposure condition:

Operating modes with client device (1 %, 50%, 99% battery status of client device) have been test, only show the data of worst case of 1% battery status of client device.

H-field measurements are taken along all three axes the device from 0cm~20cm in 2cm minimum increment for each edge surface of the host/client pair. If the center of the probe sensing element is more than 5mm from the probe outer edge, the field strengths need to be estimated for the positions that are not reachable.

According to the requirements if KDB 680106 D01 v04, If the center of the probe sensing element is located more than 5mm from the probe outer surface, the field strengths need to be estimated through modeling for those positions that are not reachable. (The sensitive elements are located approximately 18.5 mm below the external surface specified in user manual of MAGPy-8H3D+E3D)

The actual 0cm field strengths need to be estimated for the positions that are not reachable via numerical calculation.

We use Biot-Savart formula theory to estimate the strength of the magnetic field that the measuring instrument cannot measure. According to Biot-Savart formula:

Top & Bottom Side:

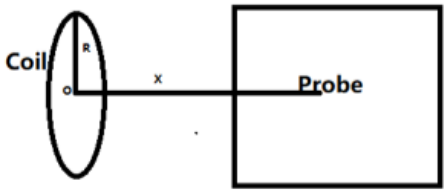

$$B = \frac{\mu_0 * I * N * R^2}{2 * (R^2 + x^2)^{3/2}}$$

Front, left, right & rear Side:

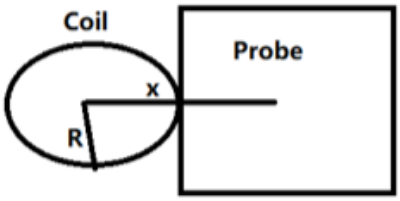

$$B = \frac{\mu_0 * I * N}{2 * x}$$

B: means H-field value;
μ_0 is space permeability; μ0=4π*10-7;
I: A current element passing through a coil;
R: means the Radius of coil(According to provided Antenna specification: We can get the minimum R=39.5/2=19.75mm=0.01975m);
x: means the evaluated point to the coil center. (For top & bottom side: x=test distance; For other side: x=test distance+R)
N: Number of turns, According to provided “Antenna specification” files: N=11.

For validation purposes: If the value to show a 30% agreement between the mode and the (E- and/or H-field) probe measurements for the two closest points to the device surface, and with 2cm increments. Then this extrapolation method is reasonable.

EUT is a loop/coil emitting structure, so E-field not required. Just recorded the H-field value.

Note: <1%, 50%, >95% load all have been tested, only worse case Max load (<1%) is reported. H-Filed Strength at (distance 0cm to 20cm at 2cm iteration, i.e. at a distance of 20cm, 18cm, 16cm, 0cm, which is between the edge of the charger edge and the probe's tip) surrounding the EUT (A/m).

0-20cm has been tested, and the report only reflects the worst test results for 0cm, 2cm, 4cm, and 6cm;

Test condition 1: Mode 1 operating mode with client device (1 % battery status of client device).

Maximum permissible Exposure (112-148.5kHz)

Test Distance (cm)	Test Position Front	Test Position Back	Test Position Left	Test Position Right	Test Position Top	Test Position Bottom	Limit (A/m)
2	0.3326	0.1599	0.5958	0.6421	0.2694	0.3321	1.63
4	0.3011	0.1487	0.5516	0.5987	0.0879	0.1369	
6	0.2747	0.1327	0.5329	0.5792	0.0711	0.1236	

Use the Biot-Sacart Law to estimated the results of 2cm through 4cm

Test position	Measure Value (A/m)	Estimated Value (A/m)	Agreement Ratio	Limits
Front	0.3326	0.4205	26.43%	30%
Back	0.1599	0.1815	13.49%	
Left	0.5958	0.7607	27.68%	
Right	0.6421	0.8257	28.59%	
Top	0.2694	0.3401	26.23%	
Bottom	0.3321	0.4009	20.72%	

Use the Biot-Sacart Law to estimated the results of 4cm through 6cm

Test position	Measure Value (A/m)	Estimated Value (A/m)	Agreement Ratio	Limits
Front	0.3011	0.2747	-8.77%	30%
Back	0.1487	0.1327	-10.76%	
Left	0.5516	0.5329	-3.39%	
Right	0.5987	0.5792	-3.26%	
Top	0.0879	0.0711	-19.11%	
Bottom	0.1369	0.1236	-9.72%	

As the model is sufficient, the calue of 0cm can be estimated through the results of 2 cm

Test position	Estimated Value (A/m)	Limits (A/m)
Front	0.5512	1.63
Back	0.2051	
Left	0.9596	
Right	1.0342	
Top	0.8899	
Bottom	1.3671	

Test condition 2: Mode 4 operating mode with client device (1 % battery status of client device).

Maximum permissible Exposure (360kHz)

Test Distance (cm)	Test Position Front	Test Position Back	Test Position Left	Test Position Right	Test Position Top	Test Position Bottom	Limit (A/m)
2	0.1268	0.0387	0.1511	0.1924	0.0836	0.1399	1.63
4	0.1124	0.0311	0.1216	0.1756	0.0254	0.0587	
6	0.1033	0.0287	0.1123	0.1666	0.0236	0.0469	

Use the Biot-Sacart Law to estimated the results of 2cm through 4cm

Test position	Measure Value (A/m)	Estimated Value (A/m)	Agreement Ratio	Limits
Front	0.1268	0.1570	23.80%	30%
Back	0.0387	0.0380	-1.93%	
Left	0.1511	0.1677	10.99%	
Right	0.1924	0.2422	25.87%	
Top	0.0836	0.0983	17.54%	
Bottom	0.1399	0.1719	22.87%	

Use the Biot-Sacart Law to estimated the results of 4cm through 6cm

Test position	Measure Value (A/m)	Estimated Value (A/m)	Agreement Ratio	Limits
Front	0.1124	0.1033	-8.10%	30%
Back	0.0311	0.0287	-7.72%	
Left	0.1216	0.1123	-7.65%	
Right	0.1756	0.1666	-5.13%	
Top	0.0254	0.0236	-7.09%	
Bottom	0.0587	0.0469	-20.10%	

As the model is sufficient, the calue of 0cm can be estimated through the results of 2 cm

Test position	Estimated Value (A/m)	Limits (A/m)
Front	0.2101	1.63
Back	0.0496	
Left	0.2434	
Right	0.3099	
Top	0.2762	
Bottom	0.5759	

******** END OF REPORT ********