User Manual

Table of Contents

GETTING STARTED **4-9**

- Specifications 7
- Installing the microSD Card (Not Included) 8
- Charging the Battery 8
- Powering the Sweam device On & Off 9
- Restarting the Sweam device 9
- Waking Up the Sweam device 9
- Initial Set Up 9

PROJECTION **10-11**

- Adjusting the Projection 10-11

DEVICE SETTINGS **12-15**

- **Network** **12**
  - Wi-Fi 12
  - Bluetooth 12
  - Virtual Hotspot 12
  - VPN 12
- **Device** **12-13**
  - Display 12
  - Notifications 13
  - Sound 13
  - Apps 13
  - Storage 13
  - Battery 13
  - Memory 13
  - Users 13
- **Personal** **13-14**
  - Location 13
  - Security 13
  - Accounts 13
  - Google 14
  - Language & Input 14
  - Backup & Reset 14
- **System** **14-15**
  - Date & Time 14-15
  - Scheduled on and off 15
  - About Tablet 15

PERSONALIZATION 16-17

Changing the System Language 16

Setting the Date & Time 16

Changing the Notification Ringtone 16

Changing the Alarm Ringtone 16-17

Adjusting Volume 17

Changing Screen Brightness 17

Protecting the Sweam device with Screen Locks 17

CONNECTING TO NETWORKS & DEVICES 18-21

Connecting to Wi-Fi® 18

Turn Wi-Fi On and Connect to a Wi-Fi Network 18

Add a Wi-Fi Network 18

Forget a Wi-Fi Network 18

Connecting to Bluetooth® Devices 19-20

Turn Bluetooth On/Off 19

Change the Device Name 19

Pair With another Bluetooth Device 19

Unpair From a Bluetooth Device 19

Send Data Through Bluetooth 19-20

Connecting to the Computer Using USB 20

Connect the Sweam device to a Computer Using USB 20

Disconnect the Sweam device from the Computer 20

Remove the microSD Card from the Sweam device 20

Erase the microSD Card 20

Setting the Sweam device as a Wi-Fi Hotspot 20-21

Turn on the Hotspot 21

Set Your Hotspot 21

TROUBLESHOOTING 22

ABOUT THIS MANUAL 23-24

Notice 23

Disclaimer 23

Copyright & Trademarks 24

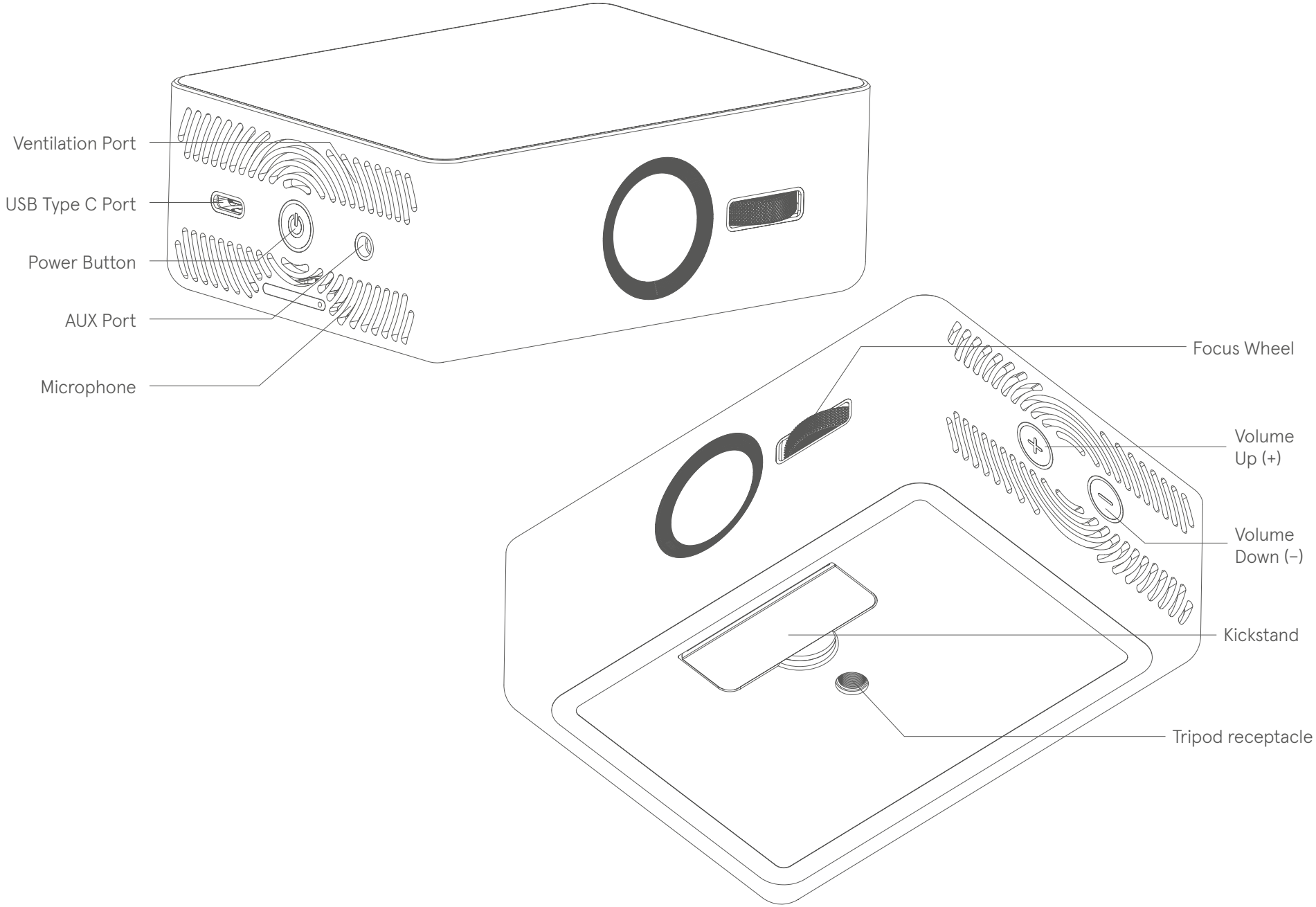
Ventilation Port
USB Type C Port
Power Button
AUX Port
Microphone
Focus Wheel
Volume Up (+)
Volume Down (–)
Kickstand
Tripod receptacle

GETTING STARTED

WARNING!
Do not look directly into the projection lens or point the lens toward people or animals' eyes when the projector is on as this may cause injury to the eyes.

Tripod receptacle

- Connect a tripod (not included in the packaging).

Power

- Press and hold to power on, power off, or restart the Sweam device.
- Press to turn off or on the screen display.

Volume up and down

- Press or hold to turn the volume up or down.

Back

- Touch to go to the previous screen.

Home

- Touch to return to the HOME tab of the home screen
- Touch and hold to use Google Search.
- Touch to see recently used apps.

Microphone

Transmit your voice.

Ventilation port

- Exhaust hot air when the projector is on.

WARNING!
Do not place anything near the ventilation port as this may cause internal heat accumulation. Do not place your hand near the ventilation port as this may cause injury.

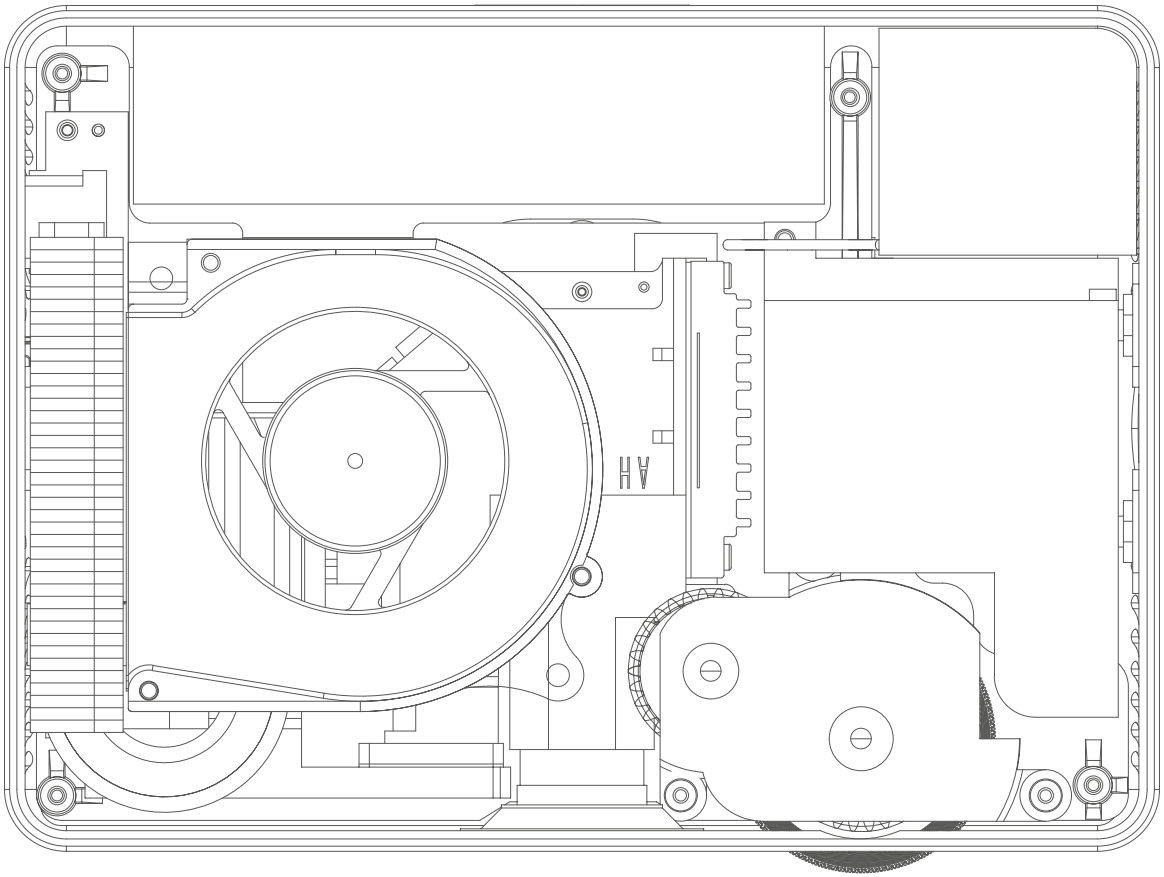
HY

Specifications

Display

- LCD Resolution - 1280 x 720p

Projector

- Projection resolution - 1280 x 720p
- Throw ratio - 1.2:1
- Display technology - Texas Instruments DLP
- Light source - RGB LED
- True Brightness - 100 ANSI lumens

Operating system

- Android 7.1

Processor & Memory

- Processor - Qualcomm Snapdragon 625
- Internal memory - 16GB
- RAM - 2GB DDR3

Power and Battery

- Power adapter - 5V/3A or 9V/2A or 12V/1.5A
- Battery - 3.7V @ 7000mAh

Sound

- Built-in speaker - 2W Mono
- AUX port

Bluetooth

- Bluetooth 4.1

Wi-Fi

- 802.11, 2.4/5GHz

4G Supported bands

- 850 MHz
- 1 900 MHz

Size & Weight

- Height: 41 mm / 1.6 in
- Width: 112 mm / 4.4 in
- Length: 82 mm / 3.2 in
- Weight: 420 g / 14.8 oz

Finish

- Anodized Grey Aluminum Alloy

Installing the microSD Card

NOTE: The microSD card is not included and has to be purchased separately.

The Sweam Device must be on to install or remove a microSD card. Unmount the microSD card before removing it.

1. Insert the tip of the tray eject tool into the hole on the microSD card tray and take the tray out of the slot.
2. Place the microSD card on the tray as shown and carefully install the tray back.

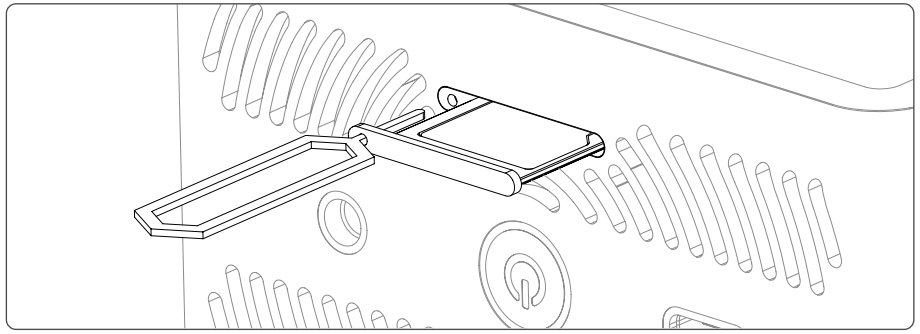

NOTE: Some applications may require a microSD card to work properly if it stores certain data on it. Therefore, it is recommended that you keep a microSD card installed and not to remove or replace it unnecessarily.

Charging the Battery

You should fully charge the battery before using the Sweam Device. Out of the box the battery should have enough power for the Sweam Device to turn on.

CAUTION: Do not try to remove or change the built-in rechargeable battery in the Sweam Device. Doing so violates the Sweam Warranty Policy. Contact customer service for support.

1. Connect the USB Type-C cable with the USB power adapter.
2. Plug the USB Type-C cable into the USB type-C input on the device and then put the power adapter plug into an electrical outlet.

   WARNING! *Use only Sweam-approved chargers and cables. The use of unauthorized accessories may cause damage.*

3. Disconnect the USB type-C cable from the device when the battery is fully charged.

NOTE: If the battery is extremely low, you may not be able to power on the Sweam Device even when it is charging. Allow the device to charge longer and try again. Contact customer service if you still cannot power on the Device after prolonged charging.

Powering the Sweam device On & Off

Ensure that the battery is charged.

- Press and hold the Power button to turn on the device.
- To power it off, press and hold the Power button to open the options menu. Touch Power off and touch OK.

Restarting the Sweam device

If the screen freezes or takes too long to respond, try pressing and holding the Power button for about 10 seconds to restart the device.

Waking Up the Sweam device

The Sweam Device automatically goes into sleep mode when it is not in use for certain time. The touch screen is turned off to save power and the keys are locked to prevent accidental operations. You can wake up the Sweam Device by following the instruction as below.

1. Press the Power button to turn the touchscreen on.
2. **NOTE:** If you set an unlock pattern, a PIN or a password for the Sweam Device, draw the pattern, or enter the PIN/ password to unlock the device.

Initial Set Up

When you first power on the device or reset it to factory settings, you need to set some settings before using it. For more information about resetting it to Factory Settings, see Backup and Reset Touch the language field to select the language and then follow the prompts to set up Wi-Fi, Google account, Google location and other options.

PROJECTION

You can use the Sweam Device light module to project media from the device or files stored on other devices connected to it. **WARNING!** Do not look directly into the projection lens or point the lens toward people or animals eyes when the projector is on as this may cause injury to the eyes.

Adjusting the Projection

To turn on the projection, open the app "Pico Settings" and touch one of the symbols next to "Projection Switch" seen in the picture below.

Projection Switch	<	ON	>

To adjust projection focus, scroll the focus wheel on the device.

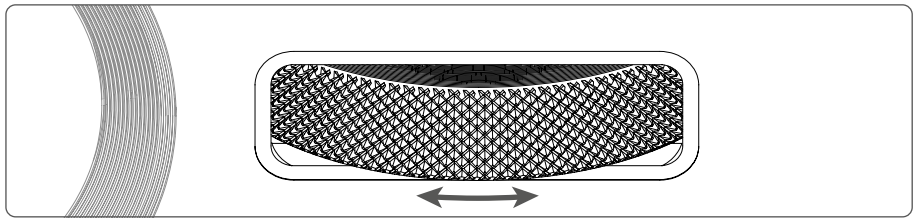

To adjust Color Temperature, touch the symbols seen in the picture below.

Color Temperature	<	0	>

To adjust Brightness Control, touch the symbols as described in the picture below.

Brightness Control	<	High	>

To change Projection Mode, touch the symbols seen in the picture below.

Projection Mode	<	Table Front	>

To turn on and off Auto Keystone Correction, touch the symbols seen in the picture below.

Auto Keystone Correction	<	ON	>

To manually adjust Keystone Correction, touch the symbols seen in the picture below.

Manual Keystone Correction	<	0	>

DEVICE SETTINGS

Network & Wireless

Wi-Fi

Touch **Home > Settings > Wireless & network > WLAN** to turn Wi-Fi on or off and configure Wi-Fi connections.

Bluetooth

Touch **Home > Settings > Wireless & network > Bluetooth** to turn Bluetooth on or off and to configure the Bluetooth connections.

Virtual Hotspot

Touch **Home > Settings > Wireless & network > More > Tethering & portable hotspot > Portable WLAN hotspot.**
You can set the Sweam Device as a LAN access point.

VPN

Touch **Home > Settings > Wireless & network > More > VPN** to set up and connect to virtual private networks.

Device

Display

Touch H**ome > Settings > Device > Display** to configure these options.

- **Brightness level:** Set screen display brightness.
- **Adaptive brightness:** Optimize brightness level for available light.
- **Wallpaper:** Select a background image for the lock screen.
- **Sleep:** Set the inactivity time before the screen automatically turns off.
- **Screen saver:** To control what happens when the Tablet is docked and/or sleeping, turn the screen saver on.
- **Ambient display:** Wake screen when you receive notifications.
- **Font size:** Set the text font size on the screen.
- **Display Size:** Set up the display size.

Notifications

Touch **Home > Settings > Device > Notifications** to adjust notification settings.

Sound

Touch **Home > Settings > Device > Sound** to adjust volume, toggle the sound and mute the Sweam Device, set up notification sound, and select system sounds. For more information, see "Adjusting Volume", "Switching to Silent Mode" and "Changing Notification Sound"

Apps

Touch **Home > Settings > Device > Apps** to see and manage all installed apps.

Storage

Touch **Home > Settings > Device > Apps** to check memory information internal storage.

Battery

Touch **Home > Settings > Device > Battery** to check battery power remaining and what is using the battery.

Memory

Touch **Home > Settings > Device > Memory** to check average use of memory.

Users

Touch **Home > Settings > Device > Users** to manage user accounts for the device.

Personal

Location

Touch **Home > Settings > Personal > Location** to switch on of location services.

Security

Touch **Home > Settings > Personal > Security** to set up security settings.

- **Screen lock:** Set up screen lock.

Accounts

Touch **Home > Settings > Personal > Accounts** to add and manage Google accounts.

Google

Touch **Home > Settings > Personal > Google** to adjust settings for Google Services.

Language & Input

Touch **Home > Settings > Personal > Languages & input** to adjust languages and input settings.

- **Languages:** Set up language for the Device.
- **Spell checker:** Turn on/off spell checker and set up languages for spell checker.
- **Personal dictionary:** Add words to the user dictionary.
- **Virtual keyboard:** Chose keyboard.
- **Physical keyboard:** Adjust settings for using the Sweam Device with a physical keyboard.
- **Text-to speech output:** Adjust settings for text-to-speech.
- **Pointer speed:** Adjust the pointer speed for when the Sweam Device is connected to a mouse or a remote.

Backup & reset

Touch **Home > Settings > Personal > Back & time** to adjust settings for backup and to reset the device.

- **Back up my data:** Turn on to back up app data, WLAN passwords, and other settings to Google Services.
- **Backup account:** Touch to add backup account for Google Services.
- **Automatic restore:** Turn on to restore backed up settings and data when reinstalling apps.
- **Factory data reset:** Reset the device to its original factory settings.

NOTE: Factory data reset will erase all data from the Sweam Device. Including accounts, apps, system settings and files.

System

Date & time

Touch Home > Settings > System > Date & time to to set date, time, time zone, and how date and time display.

- **Automatic date & time:** Turn on to use network-provided time.

- **Automatic time zone:** Turn on to use network-provided time zone.
- **Set date:** Set up date manually.
- **Set time:** Set up time manually.
- **Select time zone:** Set up time zone manually.
- **Use 24-hour format:** Turn on to use 24-hour format.

Scheduled on and off

Touch **Home > Settings > System > Scheduled power on and off** to schedule time for the Sweam Device to turn on and off.

About tablet

Touch **Home > Settings > System > About tablet** to view the Sweam Device status, legal information and other information, or upgrade the system.

PERSONALIZATION

Changing the System Language

1. Touch Home > Settings > Personal > Language & input > Language.
2. Select the language.

Setting the Date & Time

1. Touch **Home > Settings > System > Date & time**.
2. Set the date, time, time zone, and date/time format.
   » To adjust the date and time automatically, check Automatic date & time.
   » To adjust the date and time manually, uncheck Automatic date & time and touch Set date / Set time to change the date and time.
   » To adjust the time zone, touch Select time zone to set the correct time zone.
   » To adjust the format of time and date, touch Use 24-hour format or Choose date format.

Changing the Notification Sound

To customize the default notification sound:

1. Touch **Home > Settings > Device > Sound**.
2. Touch "Default notification ringtone".
3. Select the sound you want to use and touch **OK**.

Turning On/Off Other System Sounds

Touch **Home > SETTINGS > System > Device > Sound**.
Check or uncheck Touch sounds or Screen lock sounds.

Changing the Alarm Ringtone

To customize the default notification sound:

1. Touch **Home > Settings > Device > Sound**.
2. Touch "Default alarm ringtone".
3. Select the sound you want to use and touch **OK**.

Turning On/Off Other System Sounds

1. Touch **Home > Settings > Device > Sound**.

2. Touch "Other sounds".
3. Check or uncheck Touch sounds, Screen locking sounds or any other of the sounds you want to activate/deactivate.

Adjusting Volume

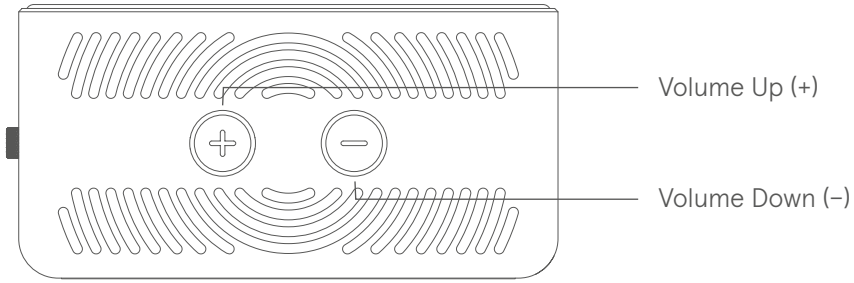

1. Touch **Home > Settings > Device > Sound**.
2. Drag the sliders to adjust the volume for each type of audio.

Changing Screen Brightness

1. Touch **Home > Settings > Device > Display > Brightness**.
2. Drag the slider to adjust the screen brightness.

Protecting the Sweam device with Screen Locks

Create a screen lock to protect the Device. When the screen lock is enabled, touch and hold on the screen, draw the pattern or enter a numeric PIN or password to unlock the Sweam Device screen and keys.

1. Touch **Home > Settings > Personal > Security > Screen lock.**
2. Swipe, Pattern, PIN or Password.
   - Touch **Long Press** t to enable screen lock and allow unlock by swiping the touch screen.
   - Touch **Pattern** to create a pattern you must draw to unlock the screen.
   - Touch **PIN or Password** to set a numeric PIN or a password that you must enter to unlock the screen.

CONNECTING TO NETWORKS & DEVICES

Connecting to Wi-Fi®

Wi-Fi is a wireless networking technology that can provide Internet access at distances of up to 100 meters, depending on the Wi-Fi router and your surroundings.

Turn Wi-Fi On and Connect to a Wi-Fi Network

1. Touch **Home > Settings > Wireless & Networks > WLAN**.
2. Slide the WLAN switch to **ON** to turn on Wi-Fi.
3. Touch a network name to connect to it.
4. If the network is secured, type the password and touch **Connect**.

NOTE: The Sweam Device automatically connects to previously used Wi-Fi networks when they are in range.

NOTE: To connect to a Wi-Fi router that supports WPS, Touch on the Sweam Device Wi-Fi menu and press the WPS button on the router.

Add a Wi-Fi Network

Follow these steps to add a Wi-Fi network if the network does not broadcast its name (SSID), or to add a Wi-Fi network when you are out of range: To connect to a secured network, ask the network administrator for the security details.

1. Touch **Home > Settings > Wireless & networks > WLAN**.
2. Slide the Wi-Fi switch to the **ON** position.
3. Touch + Add network.
4. Enter the network SSID (name). If necessary, enter security or other network configuration details.
5. Touch **Save**.

Forget a Wi-Fi Network

To make the Sweam Device forget the details of a Wi-Fi network, for example, if you don't want the Sweam Device to connect to it automatically or if it is a network that you no longer use, follow these steps:

1. Touch **Home > Settings > Wireless & networks > WLAN**.
2. Slide the Wi-Fi switch to the **ON** position.
3. Touch the Wi-Fi network name and then touch **Forget**.

Connecting to Bluetooth® Devices

Bluetooth® is a short-range wireless communication technology. Phones or other devices with Bluetooth capabilities can exchange information wirelessly within a distance of about 30 feet. The Bluetooth devices must pair before the communication occurs.

Turn Bluetooth On/Off

1. Touch **Home > Settings > Wireless & networks > Bluetooth**.
2. Slide the Bluetooth switch to the **ON** or **OFF** position. When Bluetooth is on, the icon will appear in the status bar.

Change the Device Name

1. Touch **Home > Settings > Wireless & networks > Bluetooth**.
2. Slide the Bluetooth switch to the **ON** position if Bluetooth is off.
3. Touch the upper right corner of the screen (•••) for **options > Rename this device**

Pair With another Bluetooth Device

1. Touch **Home > Settings > Wireless & networks > Bluetooth**.
2. Slide the Bluetooth switch to the **ON** position if Bluetooth is off. The Sweam Device automatically scans for and displays the IDs of all available Bluetooth devices in range.
3. Touch the device to pair with.
4. Confirm that the Bluetooth passkeys are the same between the two devices and touch Pair. Alternately, enter a Bluetooth passkey and touch Pair. Pairing is successfully completed when the other device accepts the connection or the same passkey is entered.

Unpair From a Bluetooth Device

You can make the Sweam Device forget its pairing connection with another Bluetooth device. To connect to the device again, you may need to enter or confirm a passkey again.

1. Touch **Home > Settings > Wireless & networks > Bluetooth** and ensure that Bluetooth is turned on.
2. In the list of paired devices, touch the icon next to the Bluetooth device to unpair from.
3. Touch **Unpair**.

Send Data Through Bluetooth

1. Open the appropriate application and select the file or item to share.
2. Select the option for sharing using Bluetooth. The method

may vary by application and data type.

Receive Data Using Bluetooth

1. Turn Bluetooth on before trying to receive data using Bluetooth.
   NOTE: If the Sweam Device has not paired with the sending device, you may need to keep Sweam Device visible through Bluetooth.
2. Touch Accept to start receiving the data.

Connecting to a Computer Using USB

Follow these steps to connect the Sweam Device to a computer with a USB cable to transfer music, pictures, and other files in between the devices. The Sweam Device stores these files in the internal storage or on a removable microSD card. For more information, see Storage.

Connect the Sweam device to a Computer Using USB

1. Connect the Sweam Device to the computer by using the USB Type-C sync cable that is included in the package. Insert the USB type-C end of the cable into the Sweam Device USB Type-C jack and insert the other end of the cable into an available USB port on the computer.
2. Slide the status bar down to open the notification panel and touch **Tap for more options**.
3. Choose one of these options:
   - **Transfer files:** Some USB connection modes, such as MTP, require that you install a driver
     NOTE: Transfer photos or files if MTP is not supported.
   - **Transfer photos (PTP):** Transfer media files on Windows® or Mac®.
4. When finished, disconnect the Sweam Device from the computer.

Disconnect the Sweam device from the Computer

To disconnect Sweam Device from the computer, unplug the USB type-C cable when finished.

Setting the Sweam Device as a Hotspot

You can enable the hotspot feature to set Sweam Device as a LAN access point, which allows other devices to connect to Sweam Device using Wi-Fi.

NOTE: The Sweam Device cannot connect to the hotspot to access the Internet. When the hotspot is enabled, the Sweam Device disconnects from all Wi-Fi networks.

Turn on the Hotspot

1. Touch **Home > Settings> Wireless & networks > More > Tethering & portable hotspot > Portable WLAN hotspot**.
2. Slide the switch to turn on the hotspot, the LAN access point.
3. On another device, locate the Sweam Device using Wi-Fi and connect with it.

Set Up your Hotspot

To change the name of the Sweam Device hotspot and secure it with a password, follow these steps:

1. Touch **Home > Settings > Wireless & networks > More >Tethering & portable hotspot**.
2. Touch **Set up WLAN hotspot** to set these options:
   - **Network Name:** Enter or edit a network name that other devices see when scanning for Wi-Fi networks.
   - **Security:** Choose a security option:
     - **None** - not recommended
     - **WPA2 PSK** - other users can access the hotspot only if they enter the correct password. When you select WPA2 PSK, touch the Password field to edit the security password.
3. Touch **Save** to save settings.

TROUBLESHOOTING

If you encounter problems while using Sweam Device, or if it performs abnormally, refer to this chart. If you cannot resolve the problem using the information in the chart, contact the dealer where you purchased Sweam Device.

Problem	Possible Causes	Possible Solutions
Battery does not charge or the charges slow	The battery or battery charger is damaged.	Contact the dealer.
	The Sweam Device temperature is below 0 °C or higher than 45 °C.	Adjust the battery charging environment to avoid extremes of temperature.
	Poor contact between Sweam device and the charger.	Check all connectors to ensure proper connection.
Shortened standby time.	The battery is depleted. High temperature environments shorten, battery life.	Contact the dealer to replace the battery.
Cannot turn Sweam device on.	Battery power is depleted.	Recharge the battery.
Poor Wi-Fi signal.	The Wi-Fi network signal is too weak at the current location.	Move closer to the Wi-Fi hotspot or a location without an obstacle between the Sweam device and the hotspot.
The Sweam device crashes, reboots, freezes, or cannot power on.	Some third-party problem. software is not compatible with the Sweam device.	Uninstall software that may be causing the problem.
		Upgrade the Sweam device's software.
		Reset the Sweam device to factory status.

ABOUT THIS MANUAL

Read this manual and keep it for future reference. You can always download the latest version here: **www.sweam.net/manuals/v1/english-manual.pdf**

Notice

Sweam AB reserves the right to make modifications on print errors or update specifications in this guide without prior notice. This manual has been designed with the utmost care to ensure the accuracy of its content. However, all statements, information and recommendations contained therein do not constitute a warranty of any kind, either expressed or implied. Please refer to For Your Safety to be sure to use the device properly and safely. We offer self-service for our smart terminal device users. Please visit the Sweam official website (at **www.sweam.net**) for more information on self-service and supported product models. Information on the website takes precedence.

Disclaimer

Sweam AB expressly disclaims any liability for faults and damages caused by unauthorized modifications of the software. Images and screenshots used in this manual may differ from the actual product. Content in this manual may differ from the actual product or software.

For best results, make sure you're running the latest Android system update. To find your device's version number or check for the latest system update, go to **Settings > System > About Tablet** and look for Android version or System updates.

For comprehensive online help and support, including details about Google Play edition hardware running the software described in this manual and links to information about other Android devices, visit **support.google.com/android**.

Copyright & Trademarks

Sweam and the **Sweam logos** are trademarks of Sweam AB. Parts of this guide is copyrighted © 2018 Google Inc. Google, Google Play and Android are trademarks of Google Inc. A list of Google trademarks is available at **http://www.google.com/permissions/trademark/our-trademarks.html**.

The **Bluetooth®** trademark and logos are owned by the Bluetooth SIG, Inc.

Qualcomm® SnapdragonTM processors are products of Qualcomm Technologies, Inc. Qualcomm and Snapdragon are trademarks of Qualcomm Incorporated, registered in the United States and other countries. Used with permission.

Microsoft, **exFAT**, **Windows 2000** and **Windows 10** are either registered trademarks or trademarks of Microsoft Corporation in the United States and/or other countries.

LTE is a trademark of European Telecommunications Standards Institute (ETSI).

microSD Logo is a trademark of SD-3C, LLC.

DLP is the trademark of Texas Instruments Laboratories.

All other trademarks and service marks mentioned herein, including company names, product names, service names and logos, are the property of their respective owners and their use herein does not indicate an affiliation with, association with, or endorsement of or by Sweam AB. Not all marks listed necessarily appear in this User Guide.

No part of this document may be reproduced or transmitted in any form or by any means, electronic or mechanical, including photocopying, recording or storing in a retrieval system, or translated into any language in any form without prior written permission of Sweam AB.

Copyright © 2018 Sweam AB All rights reserved.

the device for operation in the band 5150 – 5250 MHz is only for indoor use to reduce the potential for harmful interference to co-channel mobile satellite systems

Warning：

This device complies with Part 15 of the FCC Rules. Operation is subject to the following two conditions: (1) this device may not cause harmful interference, and (2) this device must accept any interference received, including interference that may cause undesired operation.

changes or modifications not expressly approved by the party responsible for compliance could void the user's authority to operate the equipment.
NOTE: This equipment has been tested and found to comply with the limits for a Class B digital device, pursuant to Part 15 of the FCC Rules. These limits are designed to provide reasonable protection against harmful interference in a residential installation. This equipment generates, uses and can radiate radio frequency energy and, if not installed and used in accordance with the instructions, may cause harmful interference to radio communications. However, there is no guarantee that interference will not occur in a particular installation.
If this equipment does cause harmful interference to radio or television reception, which can be determined by turning the equipment off and on, the user is encouraged to try to correct the interference by one or more of the following measures:
-- Reorient or relocate the receiving antenna.
-- Increase the separation between the equipment and receiver.
-- Connect the equipment into an outlet on a circuit different from that to which the receiver is connected.
-- Consult the dealer or an experienced radio/TV technician for help.
NOTE: This device and its antenna(s) must not be co-located or operation in conjunction with any other antenna or transmitter

RF Exposure Statement

To maintain compliance with FCC's RF Exposure guidelines, This equipment should be installed and operated with minimum distance of 20C m the radiator your body. This device and its antenna(s) must not be co-located or operation in conjunction with any other antenna or transmitter

www.sweam.net