E10WH User Manual

English

Contents

Important notice 3
1 About the camera 4
1.1 Functional features 4
1.2 Computer System Requirements 4
1.3 Diagrams of the camera 5
1.4 Switch & button function description 6
2 Preparation for use 7
2.1 Insert a memory card 7
2.2 Charge the camera 8
2.3 Insert AA batteries 8
2.4 Connect to computer 8
2.5 Install and fix the camera 9
3 Use the camera 10
3.1 Power on, Use, Power off the camera 10
3.2 Photo mode 11
3.3 Video mode 11
4.1 Monitor delay 12
4.2 Mode 12
4.3 Photo resolution 13
4.4 Photo series 13
4.5 Video resolution 13
4.6 Video length 13
4.7 Cycle Storage 13
4.8 PIR interval 13
4.9 PIR sensitivity 13
4.10 IR brightness 14
4.11 Target recording time 14
4.12 Time lapse 14
4.13 Language 15
4.14 Time & Date 15
4.15 Serial No. 15
4.16 Beep sound 16
4.17 Audio recording 16
4.18 Stamp 16
4.19 Password protection 16
4.20 Wi-Fi SSID 16
4.21 Wi-Fi Password 16
4.22 Auto Wi-Fi Off 17
4.23 Format memory card 17
4.24 Reset settings 17
4.25 version 17

5 Playback Mode17
5.1 View files 17
5.2 Delete current file 18
5.3 Delete all files 18
5.4 Active slide show 18
5.5 Write protect 18
6 Connect Wi-Fi 18
6.1. Install the application 18
6.2 Connect camera 19
7Appendices21
7.1 Common faults and solutions 21
7.2 Technical Specifications 21

Important notice

Safety Information

◇Please read this instruction carefully to get the best use effect.

◇Please supervise children, do not let children use the camera alone.

◇Do not use the camera near open flames, such as candles, heat sources, radiators, and stoves.

◇The camera and charger will heat up when they are working, please keep them ventilated and any covering is prohibited.

◇It is forbidden to charge for a long time, and it is forbidden to charge during lightning, otherwise it may damage the camera or cause an accident.

◇If the camera is damaged, flooded or short-circuited, please turn off the camera immediately and take out the battery.

Battery and LCD Warnings

◇Battery is a chemical product, misuse may cause fire or accident.When not in use for a long time, please take out the battery and put it in a dry place.

◇Do not short-circuit, impact, squeeze, puncture, disassemble or incinerate the battery.and it is forbidden to use a swollen or leaking battery.

◇It is forbidden to store or use batteries in high temperature places, and it is forbidden to use swollen or leaking batteries.

◇The LCD screen is fragile, and it is forbidden to beat, squeeze or knock it. Do not touch the screen if it is broken. In case of accidental contact, rinse with clean water immediately. If swallowed, rinse mouth immediately and drink plenty of water, seek medical attention immediately.

Important matters

◇Please insert the memory card and format it with the camera before use.

◇It is forbidden to use or store the camera in places with strong vibration.

◇Do not use corrosive solvents to clean the camera and accessories, please clean with a clean soft cloth.

◇Using environment: temperature -10°C~50°C (14°F~122°F),
the camera can be used in the rain, but cannot be submerged.

◇Storage environment: temperature -20°C~60°C (-4°F ~140°F), the camera can be used in the rain, but cannot be submerged.

◇It is forbidden to disassemble the camera by yourself, Disassembling it by yourself will lose the warranty qualification. If a malfunction occurs, please seek help from a professional.

Other warnings

◇Cameras with Wi-Fi or Bluetooth may interfere with aircraft, medical equipment, etc. Please do not use them where prohibited by law.

◇Please comply with local laws and regulations regarding the use of wireless devices.
◇Please abide by local laws and regulations on personal privacy protection.
◇It is forbidden to throw away the camera and accessories at will, please dispose of it reasonably according to local laws.

Check before use
Please take a test shot before use to ensure the camera is working properly. We are not responsible for any additional losses caused by incorrect use or malfunction.

Copyright and Trademark
Microsoft/windows is a registered trademark of Microsoft Corporation.
Pentium is a registered trademark of Intel Corporation.
Macintosh/Mac OS/iOS are registered trademarks of Apple Inc.
Android is a registered trademark of Google Inc.
Referenced product names, proper nouns or trademarks are registered trademarks of their respective owners.

About the manual
◇The pictures are for reference only. We try our best to keep the content correct. If the product is updated, please refer to the actual product.
◇In order to improve the user experience, the APP may be upgraded, please use it according to the actual situation without prior notice.
◇We reserve all rights to this manual. Any unit or individual shall not reproduce or disseminate without our consent.

1 About the camera

Thanks for choosing this product! If you encounter problems during use, please contact us in time.

1.1 Functional features
This camera can work fully automatically and is widely used in animal photography, hunting, home security and other application scenarios.
It has the following characteristics:
◆36 MP ◆4K UHD ◆Solar charging automatically ◆Built-in 5200mA lithium battery ◆Compatible with 4x AA dry batteries ◆Wi-Fi&Bluetooth ◆0.3s quick trigger ◆Backlit buttons ◆Temperature detection ◆2.0-inch IPS screen ◆Optional night vision intensity ◆Time-lapse ◆IP66 rainproof ◆Automatic work around the clock

1.2 Computer System Requirements

When using the camera with a computer, the computer must not fall below the following specifications:
CORE i3/3.0G or above processor/Windows XP or above operating system

8GB or more memory/2GB or more graphics card/500GB or more available disk space
Standard USB2.0 or higher interface/1920x1080 pixel or higher screen resolution.

If the computer specification is low, it may not work properly when connected to the camera.

1.3 Diagrams of the camera

Front view Rear view

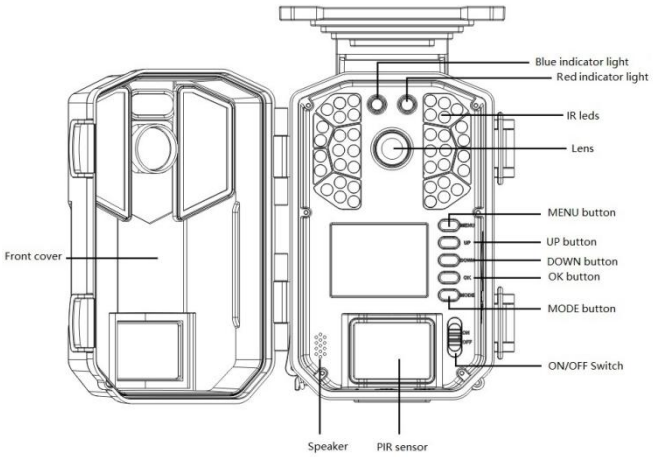

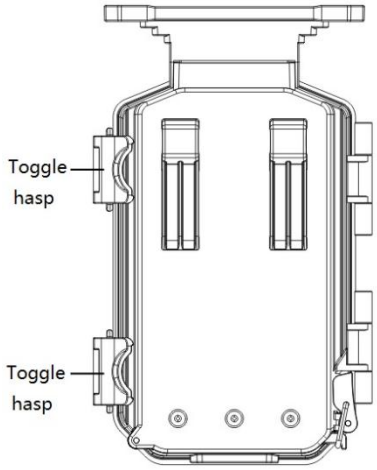

Left side view Bottom view

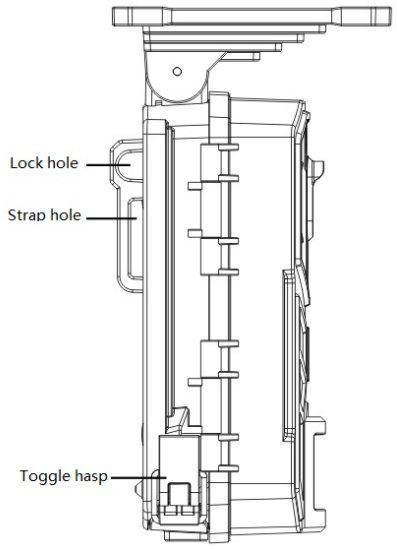

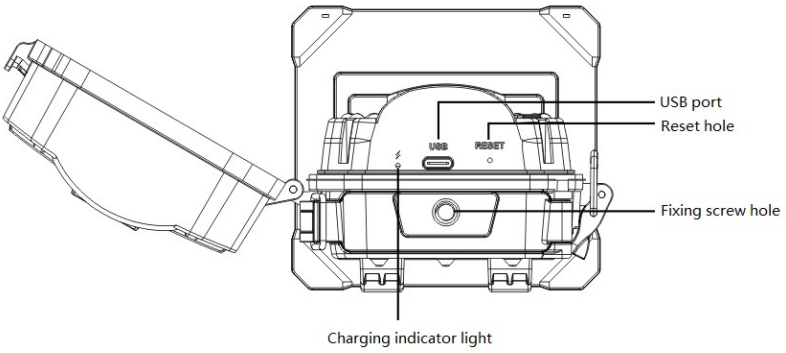

Front cover open view

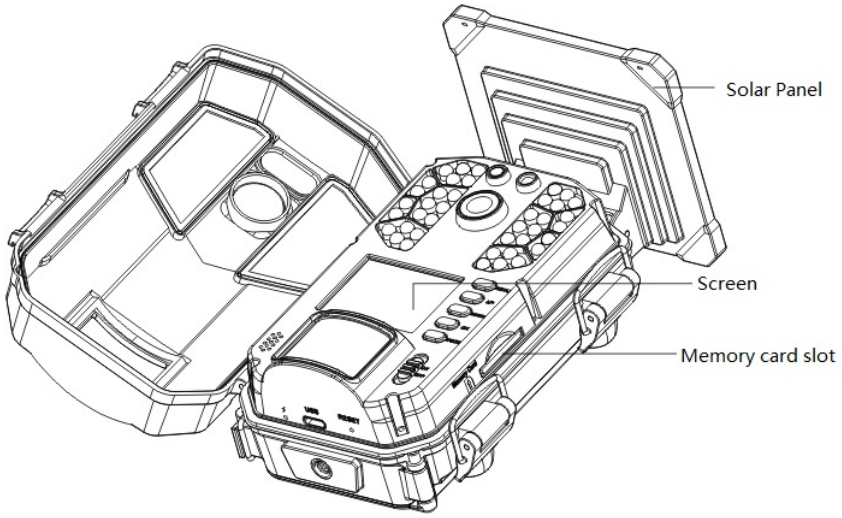

1.4 Switch & button function description

Icon	Switch or	Functions

	Button name	
ON OFF	<ON/OFF> switch	OF: Power off, the camera stops working. ON: Set camera parameters, preview, test shot, playback, etc. Monitoring mode, enter automatic monitoring state after completing the settings.
MENU	<MENU>	Pop up menu/Return
MODE M	<MODE>	Change mode: Video mode/Photo mode/Playback mode
UP	<UP>	Move up or Page forward Turn Wi-Fi on or off manually
DOWN	<DOWN>	Move down or Page backward
OK	<OK>	Confirm execution
RESET	<RESET>	Reset. Slide the <ON/OFF> switch to "ON", insert a pin or thin needle to the hole and short press this button to reset the camera

2 Preparation for use

2.1 Insert a memory card

The camera must have a memory card inserted in order to function properly.

2.1.12.1.1 Release the toggle hasp, open the cover, insert the memory card (with the metal contacts facing down) into the card slot, and push it inward until you hear a "click" sound.

2.1.2 Before use, format the memory card with the camera (see operation 4.21).

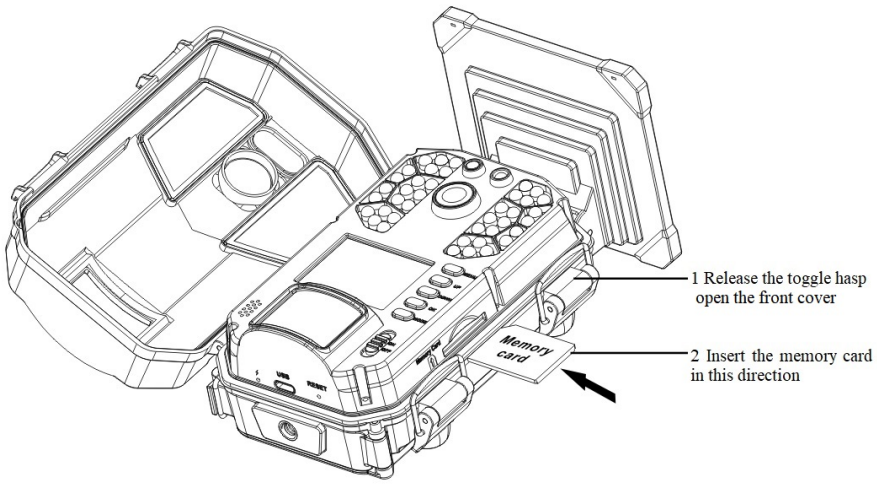

Notice:

It is forbidden to remove or insert the memory card while the camera is working, otherwise the memory card will be damaged or data will be lost.

Use qualified CLASS10 or above memory cards, inferior memory cards will cause the camera to not work properly.

2.2 Charge the camera

The camera has a built-in lithium battery and uses the lithium battery first. It can be charged by connecting the adapter with a USB cable. It is recommended to fully charge it before use.
The camera comes with a solar panel. When the camera is used in sunlight, the solar panel automatically charges the camera.
2.2.1 The charging indicator light indicates the charging status: Red means charging, Green means charging is completed.
2.2.2 If the screen is on during charging, the USB charging icon will be displayed on the screen when using USB charging. When charging using solar cells, the solar charging icon is displayed.

2.3 Insert AA batteries
The camera is compatible with 4 AA batteries. When the lithium battery is low, it automatically switches to AA batteries for power supply. Please install AA batteries as follows.
2.3.1 Release the toggle hasp, open the battery cover. Insert 4 AA batteries in the direction indicated by the camera icon.
2.3.2 Keep the battery cover clean, close the battery cover, and fasten the toggle hasp.

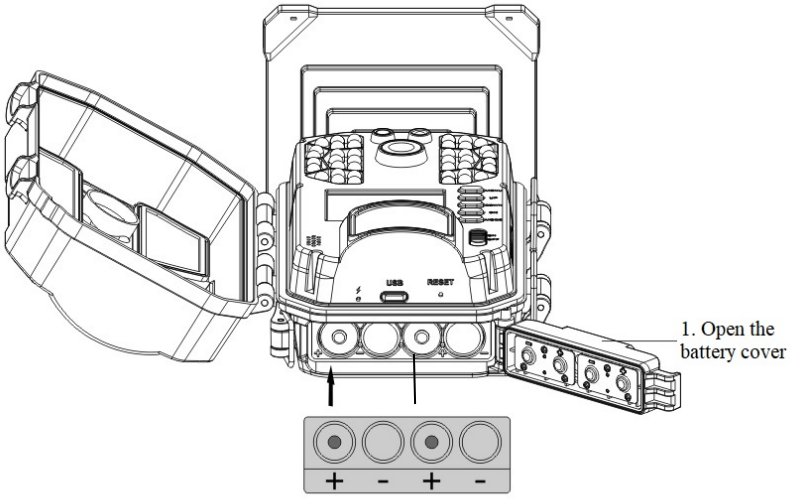

2. Insert 4 AA batteries

Notice:
Keep the battery compartment clean and dry, and prevent foreign matter or water from entering.
Insert AA batteries in the specified direction. Incorrect placement may damage the camera or cause danger. It is prohibited to mix old and new batteries.
After the batteries are inserted, the toggle hasp must be fastened, otherwise water or dust may enter.

2.4 Connect to computer
The camera can be connected to a computer to transfer files and view photos and videos.
2.4.1 Slide the <ON/OFF > switch to "ON" and connect the computer and camera with a USB cable.
2.4.2 After the connection is successful, the camera screen displays "MSDC" and the computer displays "Removable Disk". At this time, it can be operated on the computer like an ordinary USB

flash drive.

Notice:
When connecting to the computer, the <ON/OFF > switch should slide to "ON". If the computer configuration is low, it may not work properly when connecting to the camera.

2.5 Install and fix the camera
To ensure safe and reliable use of the camera, please install the camera in a secure place.
2.5.1 Install with a strap
Pass the strap through the strap hole on the back of the camera, fix the strap on a tree or other solid object, adjust the shooting angle, and tighten the strap.

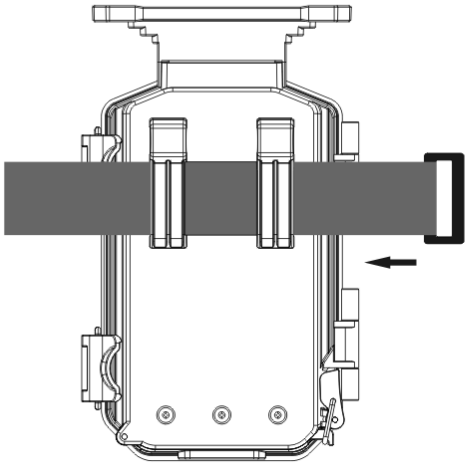

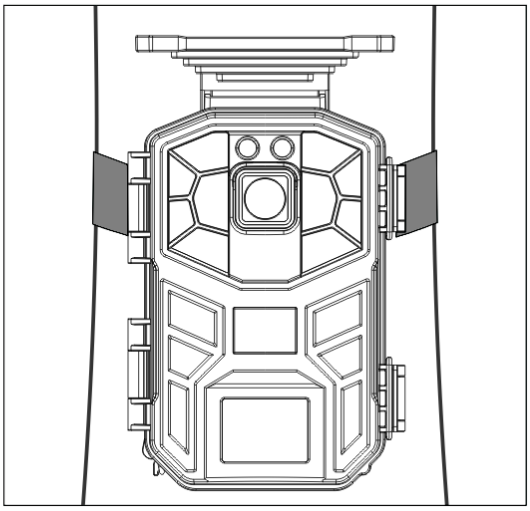

2.5.2 Adjust the angle of the solar panel
The angle of the solar panel can be adjusted within a certain range to better receive sunlight and achieve optimal charging efficiency.
When installing the camera, make sure the sunlight is fully shining on the solar panel. After installation is complete, adjust the solar panel to the appropriate angle to obtain the best sunlight. During use, no objects are allowed to block the solar panel.

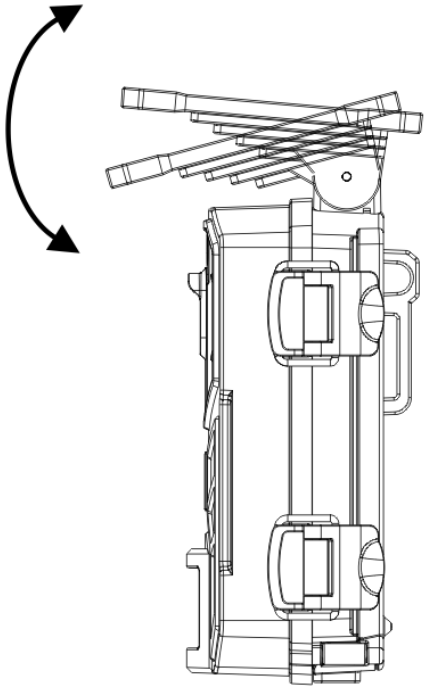

3 Use the camera

This chapter tells you how to take pictures with your camera.

3.1 Power on, Use, Power off the camera

3.1.1 power on

Slide the <ON/OFF> switch to "ON", the screen will be on and the camera will be powered on.
At this time you can set the camera parameters (see Chapter 4). It is recommended to use the default settings.

3.1.2 Preview mode switching

When the <ON/OFF> switch is "ON" and the screen is on, you can switch to preview mode. When the <ON/OFF> switch is "ON", the camera automatically defaults to "Photo mode".
Press <MODE> to switch in sequence: Photo mode - Video mode - Playback mode.
In each mode, the corresponding icon is displayed in the upper left corner of the screen:
"" means the Photo mode. "" means video Video mode. "" means Playback mode

Notice:
Press <MODE> only switches the preview mode, not the camera's working mode.
If you want to change the camera working mode, you must do it in the settings menu.

3.1.3 Test shot before use

To ensure that the camera works properly, please take a test shot before use.
3.1.3.1 Slide the <ON/OFF> switch to "ON", press <OK> to take photos, press <MODE> to enter

Video mode, and press <OK> to record video.
3.1.3.2 Press <MODE> to enter playback mode, play back videos and photos on the screen, and check whether the camera is working properly.

3.1.4 Monitoring shooting
Slide the <ON/OFF> switch to "ON", turn on the camera, and the screen is on. If there is no operation, the camera will enter a countdown after a certain period of time, and the blue light will flash and the screen will display a 10-second countdown. After 10 seconds, the screen will be off and enter the monitoring state. At this time, the camera automatically monitors and captures moving animals or people.

3.1.5 Power off
Slide the <ON/OFF> switch from "ON" to "OFF" and the camera will turn off. After shutting down, you need to wait 3 seconds before turning it on again.
Notice:
When the camera is working, slide <ON/OFF> switch, the camera will automatically save the file being shot.

3.2 Photo mode
Slide the <ON/OFF> switch to "ON". The default is photo mode. The screen displays as follows:

1 Photo mode	2 Photo resolution	3 Number of photos that can be taken	4 Memory card
5 Solar charging	6 AA battery level	7 Lithium battery	8 Lithium battery level
9 Time	10 Date		

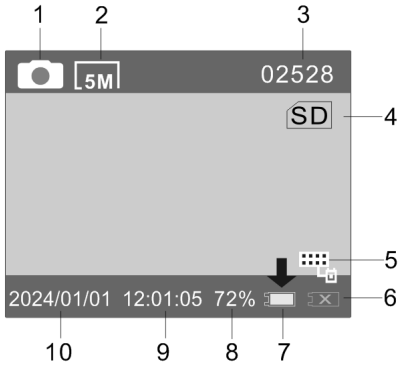

3.3 Video mode
Press <MODE> to change to video mode, the screen will display as follows:

1Video mode	2 Video resolution	3 Remaining video recording time	4 Memory card
5 Solar charging	6 AA battery level	7 Lithium battery	8 Lithium battery level
9 Time	10 Date		

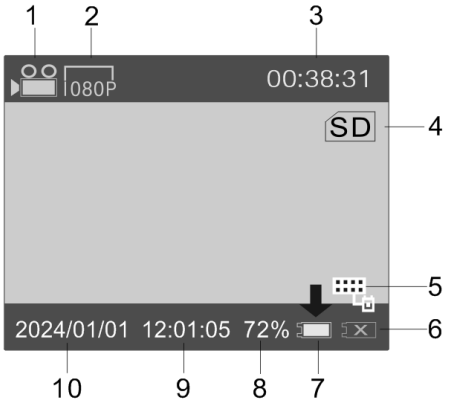

4 Settings

This chapter helps you set camera parameters and use advanced functions.

Slide the <ON/OFF> switch to "ON" and press <MENU> to pop up the "Settings" menu, where you can set camera parameters. In the menu, press <UP>/<DOWN> to move forward or backward, press <OK> to confirm the operation, and press <MENU> to cancel or exit.

After the setting is completed, do not operate the camera again. The camera will automatically enter monitoring mode after a set delay time.

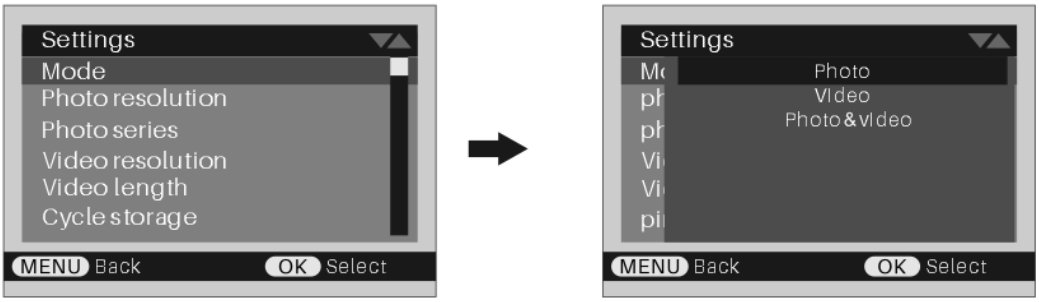

4.1 Monitor delay

Set the waiting time for the camera to delay entering monitoring mode after it is powered on.

4.1.1 Press <MENU> to pop up the "Settings" menu, press <UP>/<DOWN> to select "Monitoring delay", and press <OK> to enter the options.

4.1.2 Press <UP>/<DOWN> to select the required delay time.

4.1.3 Press <OK> to confirm and return, press <MENU> to exit the menu.

4.2 Mode

Set what mode to use when the camera is working in monitoring shooting state (<ON/OFF> switch is "ON").

4.2.1 In the "Settings" menu, press <UP>/<DOWN> to select "Mode", and press <OK> to enter the options.

4.2.2 Press <UP>/<DOWN> to select the working mode: Photo/Video/Photo & Video, press <OK> to confirm and return.

Notice:

Select "Photo" mode and the camera only takes photos.

Select "Video" mode and the camera will only record video.

Select the "Photo + Video" mode: take pictures first, then record a video.

4.3 Photo resolution
Set the size of the photo. This option is only applicable to photo mode, not video mode.
4.3.1 Press <UP>/<DOWN> to select "Photo Resolution" and press <OK> to enter the options.
4.3.2 Press <UP>/<DOWN> to select the required photo resolution and press <OK> to confirm.

4.4 Photo series
Set the number of photos taken each time. Only available in photo mode.
4.4.1 Press <UP>/<DOWN> to select "Photo series" and press <OK> to enter options.
4.4.2 Press <UP>/<DOWN> to select: 1 picture/2 pictures in series/3 pictures in series. Press <OK> to confirm.

4.5 Video resolution
Set video resolution. The higher the resolution, the better the video quality and the more storage space it takes up. Only applicable to video mode, not photo mode.
4.5.1 Press <UP>/<DOWN> to select "Video resolution", and press <OK> to enter options.
4.5.2 Press <UP>/<DOWN> to select the video resolution and press <OK> to confirm.

4.6 Video length
Set the video duration, only applicable to video mode.
4.6.1 Press <UP>/<DOWN> to select "Video Length" and press <OK> to enter the options.
4.6.2 Press <UP>/<DOWN> to select the video length, and press <OK> to confirm.

4.7 Cycle Storage
Loop storage means that when the memory card is full, the camera automatically overwrites the oldest video and saves the latest file.
4.7.1 Press <UP>/<DOWN> to select "Cycle Storage" and press <OK> to enter options.
4.7.2 In the "Cycle Storage" option, select whether to enable loop recording and press <OK> to confirm.

4.8 PIR interval
Set the interval time of PIR sensing (that is, after shooting once, how long will it take before starting detection).
4.8.1 Press <UP>/<DOWN> to select "PIR interval", and press <OK> to enter options.
4.8.2 Press <UP>/<DOWN> to select the interval time, and press <OK> to confirm.

Notice:
The PIR interval affects battery life. The shorter the interval, the easier it is for the camera to capture the target, but it consumes more power.

4.9 PIR sensitivity
Set the camera PIR sensitivity, you can choose the appropriate sensitivity according to the use environment.
4.9.1 Press <UP>/<DOWN> to select "PIR Sensitivity", and press <OK> to enter options.

4.9.2 Press <UP>/<DOWN> to select sensitivity and press <OK> to confirm.

Notice:
PIR sensitivity affects battery life. Selecting high sensitivity makes it easier for the camera to capture objectives, but it also consumes more power.

4.10 IR brightness
Set the brightness of the infrared light.
4.10.1 Press <UP>/<DOWN> to select "IR Brightness", and press <OK> to enter options.
4.10.2 Press <UP>/<DOWN> to select the infrared light brightness, and press <OK> to confirm.

Notice:
The PIR interval affects battery life. The shorter the interval, the easier it is to capture the objectives but it consumes more power.
PIR sensitivity affects battery life. Selecting high sensitivity makes it easier for the camera to capture the objectives, but it also consumes more power.
The IR brightness affects battery life and night vision. Selecting high brightness consumes more power, but provides clearer night vision.

4.11 Target recording time
Turn on or off the monitoring period. After turning it on, you can set the start and end time of the monitoring period.
When "Time lapse" is turned off and "Target recording time" is turned on, the camera will only sense and shoot during the monitoring time period. Outside the monitoring time period, the PIR does not work and the camera does not shoot.
When "Time lapse" and "Target recording time" are turned on at the same time, PIR does not work during the set time period, and the camera takes photos at a scheduled time and synthesizes video files. The camera does not work outside of monitoring hours.
4.11.1 Press <UP>/<DOWN> to select "Target recording time", and press <OK> to enter options.
4.11.2 Press <UP>/<DOWN> to select: Off/On. Select "Off" and press <OK> to confirm without setting the monitoring period.
Select “On”, press <OK> to confirm, the cursor stops at the start, press <UP>/<DOWN> to select “Hr”, press <OK> to confirm, the cursor moves to “Min”, press <UP>/<DOWN> Select the value and press <OK>. Move the cursor to end, press <UP>/<DOWN> to select "Hr", press <OK>, the cursor moves to "Min", press <UP>/<DOWN> to select the value.
4.11.3 Complete the setting, and press <OK> to confirm.

Notice:
The start time of "Target recording time" must be later than the current time of the camera.

4.12 Time lapse
Turn on or off Time Lapse. After turning it on, set the interval between scheduled photos (that is, how long it takes to take a photo). Time-lapse photography is a time-compressed photography technique that is often used to capture scenes or processes that change very slowly. The shooting

process of minutes or hours can be compressed into a shorter period of time and merged into video files.
When "Target recording time" is turned off and "Time lapse" is turned on, the camera will take pictures at regular intervals throughout the day.
Turn on "Target recording time" and "Time lapse" at the same time, and the camera will take pictures regularly within the set time period. Outside the time period, the camera does not work.
4.12.1 Press <UP>/<DOWN> to select "Time lapse", and press <OK> to enter options.
4.12.2 Press <UP>/<DOWN> to select: Off/On. Select “Off” and press <OK> to turn off Time lapse.
Select "On" to enter the "Set time lapse" menu. The cursor stops at "Min", press <UP>/<DOWN> to adjust the number, press <OK> to switch the cursor to "Sec", adjust the number, and press <OK> to confirm.

Notice:
"Time lapse" and "Target recording time" can work independently or in combination.
Turn on "Time lapse" and "Target recording time" at the same time. During the set monitoring period, the camera will take photos at regular intervals. Outside the time period, the camera will not work.
When “Time lapse” is turned on, PIR will not work and the camera will not sense and take pictures.

4.13 Language
Set the system language, please choose according to your need.
4.13.1 Press <UP>/<DOWN> to select "Language", and press <OK> to enter options.
4.13.2 Select language, confirm with <OK> and return.

4.14 Time & Date
Set the system time and date, as well as the display style.
4.14.1 Press <UP>/<DOWN> to select "Time & Date", and press <OK> to enter the submenu.
4.14.2 Stop the cursor at the first digit, press <UP>/<DOWN> to adjust the number, press <OK> to move to the next digit, adjust the number, and press <OK> to move to the next digit. Complete all settings in sequence and press <OK> to confirm.
4.14.3 In the submenu, press <DOWN> to select "Time Format", press <OK>, press <DOWN> to select the time format, and press <OK> to confirm.
4.14.4 In the submenu, press <DOWN> to select "Date Format", press <OK>, press <DOWN> to select the date format, and press <OK> to confirm.

4.15 Serial No.
Each camera can be set with an independent serial number to distinguish other cameras.
4.15.1 Press <UP>/<DOWN> to select "Serial No." and press <OK> to enter the

options.
4.15.2 Select "On", stop the cursor at the first digit, press <UP>/<DOWN> to adjust the number, press <OK>, switch to the next digit, press <UP>/<DOWN> to adjust the number. Repeat the above steps to complete all settings in sequence. Confirm with <OK>.

4.16 Beep sound
Turn on or off the camera's key operation sound.
4.16.1 Press <UP>/<DOWN> to select "Beep sound", and press <OK> to enter options.
4.16.2 Press <UP>/<DOWN> to select Beep sound: Off/On, and press <OK> to confirm.

4.17 Audio recording
Turn the camera's built-in microphone on or off.
4.17.1 Press <UP>/<DOWN> to select "Audio recording", and press <OK> to enter options.
4.17.2 Press <UP>/<DOWN> to select recording: On/Off, and press <OK> to confirm.

4.18 Stamp
Set whether photos or videos display stamps. Select Time & Date to display the time and date Stamp. Select a date to display only the date stamp.
4.18.1 Press <UP>/<DOWN> to select "Stamp", and press <OK> to enter the options.
4.18.2 Press <UP>/<DOWN> to select: Time & Date/Date/Off, and press <OK> to confirm.

4.19 Password protection
Set a power-on password to protect personal privacy. After setting the password, you need to enter the password every time you turn on the computer.
4.19.1 Press <UP>/<DOWN> to select "Password Protection", and press <OK> to enter options.
4.19.2 Press <UP>/<DOWN> to select: Off/On. Select "On", press <OK> to pop up the "Set Password" page, stop the cursor at the first digit, press <UP>/<DOWN> to adjust the number, press <OK> to move to the next digit, repeat the above steps and complete. Four-digit password setting.
4.19.3 Press <OK> to confirm.

Notice:
Please remember your password. If you forget your password, please enter the super password "1111" to enter.

4.20 Wi-Fi SSID
Modify the camera’s Wi-Fi name. Each camera can be set up with an independent Wi-Fi SSID.
4.20.1 Press <UP>/<DOWN> to select "Wi-Fi SSID" and press <OK> to enter the setting page.
4.20.2 Stop the cursor at the first character, press <UP>/<DOWN> to adjust the first character, press <OK> to move to the next character, and press <UP>/<DOWN> to adjust the second character.
Complete all settings in sequence and press <OK> to confirm.

4.21 Wi-Fi Password
Set a Wi-Fi password to protect personal privacy. The camera's default Wi-Fi password is: 12345678.
4.21.1 Press <UP>/<DOWN> to select "Wi-Fi Password", press <OK> to enter the setting page, and the cursor stops at the first position.
4.21.2 Press <UP>/<DOWN> to adjust the first character, press <OK> to move to the next

character, and press <UP>/<DOWN> to set the second character. Complete all password settings in sequence and press <OK> to confirm.

4.22 Auto Wi-Fi Off

Set a time to automatically turn off Wi-Fi. To save power, the system automatically turns off Wi-Fi if the phone is not connected for a long time.

4.22.1 Press <UP>/<DOWN> to select "Auto Wi-Fi Off", and press <OK> to enter the options.

4.22.2 Press <UP>/<DOWN> to select the waiting time for Wi-Fi to turn off automatically, and press <OK> to confirm.

4.23 Format memory card

Format the memory card and clear all files on the card.

4.23.1 Press <UP>/<DOWN> to select "Format memory card" and press <OK> to enter the options.

4.23.2 Press <UP>/<DOWN> to select the option: Yes/No, select "Yes", and press <OK> to perform the operation.

Notice:

Please use formatting with caution. Formatting will delete all files on the memory card and cannot be recovered.

4.24 Reset settings

Restore the camera to factory default parameters. Use this feature if incorrect settings are causing the camera to work abnormally. This function will not delete files on the memory card.

4.24.1 Press <UP>/<DOWN> to select "Reset Settings" and press <OK> to enter the options.

4.24.2 Select whether to restore factory settings, select "Yes", and press <OK> to perform the operation.

4.25 version

View the current version number of the camera.

Press <UP>/<DOWN> to select "Version" and press <OK> to display the current software version of the machine. Press <OK> to return.

5 Playback Mode

Photos and video files taken by the camera can be played back on the camera. You can also perform Write-protect, Unlock, Delete, etc.

<ON/OFF> switch remains in "ON", press <MODE> to change to playback mode. All operations in this chapter are performed in playback mode.

5.1 View files

5.1.1 Press <MODE> to enter playback mode, and the screen will display the files on the card. The icon in the upper left corner represents the current file type, "▶" means a photo, and "▮▮▮" means a video.

5.1.2 Press <UP>/<DOWN> to turn pages forward and backward. Select the video, press <OK> to play/pause, press <MENU> to stop.

5.1.3 Press <MODE> to exit playback mode.

5.2 Delete current file
In playback mode, delete a file.
5.2.1 Press <UP>/<DOWN> to select the file, and press <MENU> to pop up the menu.
5.2.2 Press <UP>/<DOWN> to select "Delete current file", press <OK> to pop up: Cancel/Delete.
5.2.3 Select "Delete" and press <OK> to delete the selected file.

5.3 Delete all files
Delete all photos and videos.
5.3.1 Press <MENU> to pop up the menu, press <UP>/<DOWN> to select "Delete all files", press <OK> to pop up: Cancel/Delete.
5.3.2 Select "Delete" and press <OK> to delete all files.

Notice:
Files cannot be recovered after being deleted, so please use deletion operations with caution.

5.4 Active slide show
Play photos as a slideshow.
Press <MENU> to pop up the menu, press <UP>/<DOWN> to select "Active slide show", press <OK> to play, and then press <OK> to end and stop.

5.5 Write protect
Lock one or all files to prevent accidental deletion. If you want to delete a locked file, you need to unlock the file first.
5.5.1 Press <UP>/<DOWN> to select the file. Press <MENU> to pop up the menu, press <UP>/<DOWN> to select "Write protect", press <OK> to enter the submenu, press <UP>/<DOWN> to select: Write-protect current file/Write-protect all files /Unlock current file/Unlock all files.
5.5.2 Press <MENU> to cancel the operation, press <OK> to perform the operation and return.

Notice:
After the file is write protected, the "" icon is displayed in the upper left corner of the screen.
The delete operation will not delete write protected files, but the format operation will delete write protected files.

6 Connect Wi-Fi
The camera has built-in Wi-Fi, which can connect to your phone but cannot access the Internet.

6.1. Install the application
For Android devices, search for the "Victor cam" APP in "Google Play", download it and follow the prompts to complete the installation.
For iOS devices, search for "Victor cam" in the "APP store", download it and follow the prompts to complete the installation.
You can also use your mobile phone to scan the QR code, download and install the "Victor cam"

APP.

Android & iOS

6.2 Connect camera

Slide <ON/OFF> switch to "ON", keep in photo mode or video mode , and open the "Victor cam" APP on your phone， Turn on your phone's Bluetooth.

6.2.1 Click "Connect Camera", click "Step One: Bluetooth On Wi-Fi", and wait for the phone to search for Bluetooth devices.

6.2.2 Select "Trail_Camera_XXXXXX" in the mobile phone's Bluetooth List and wait for the mobile phone's Bluetooth to activate the camera's Wi-Fi.

6.2.3 The mobile phone displays the Wi-Fi device list, select "CAMERA-XXXXXX", enter the camera Wi-Fi password, and wait for the camera to be connected.

6.2.4 Click Back icon. After the connection is successful, the phone will display the camera preview screen. At this time, the camera can be operated on the APP.

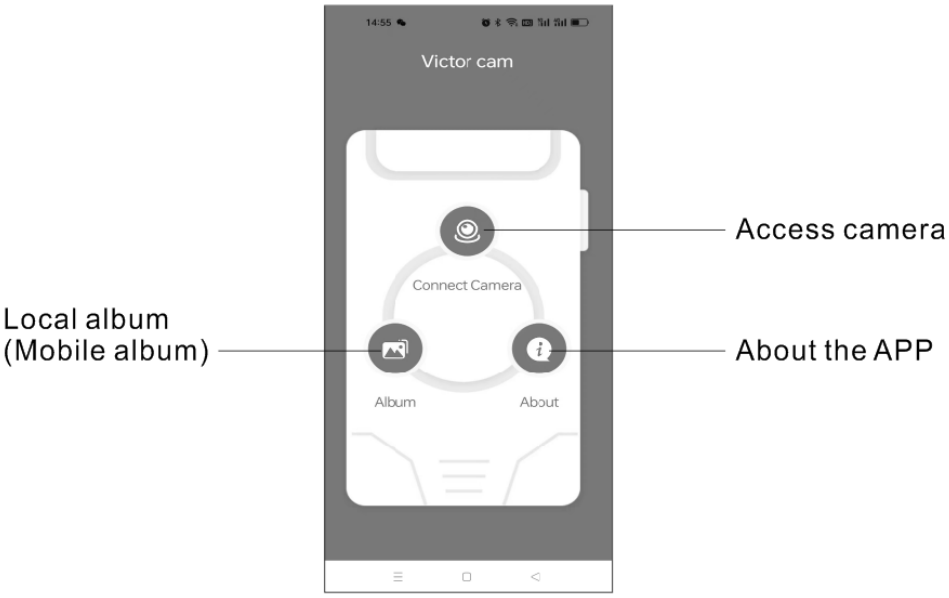

Connect the camera

Notice:

When the camera is connected to a mobile phone, the system date and time are automatically synchronized with the mobile phone.

Using Wi-Fi consumes a lot of power, and it is not recommended to use this function for a long time.

6.3 Use APP

After successfully connecting to the camera Wi-Fi, the mobile APP will display as shown in the figure.

After use, exit the APP and the camera will automatically turn off Wi-Fi after a short period of time.

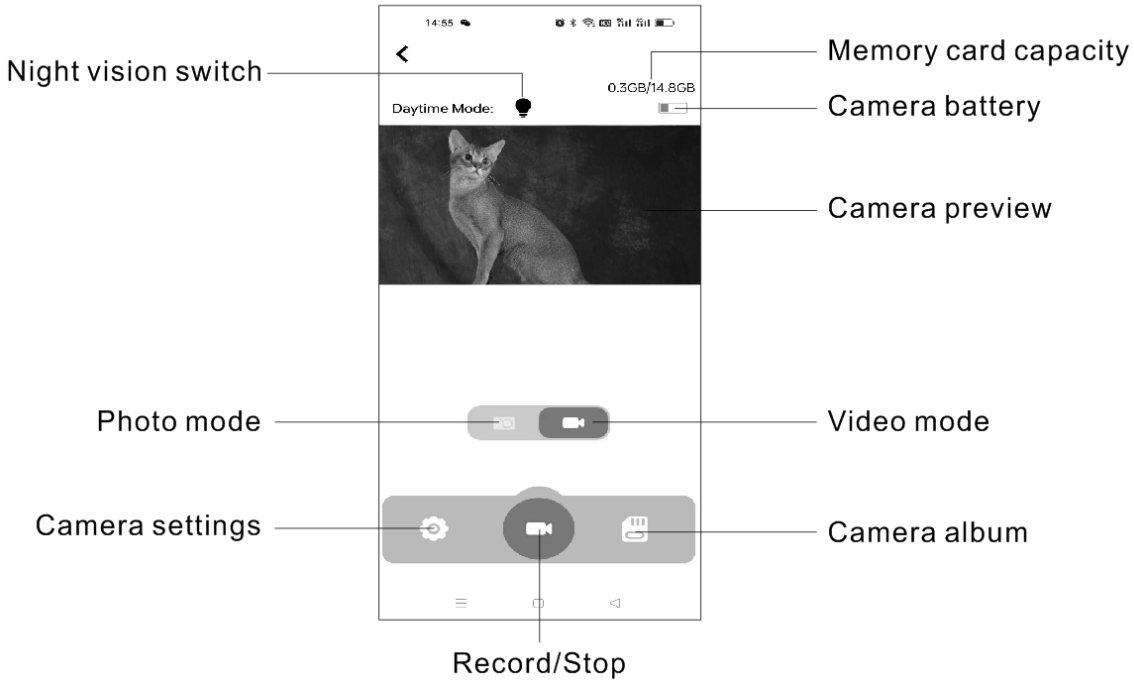

Notice:
Please download the video file to the local photo album of your mobile phone before playing it.

7Appendices

7.1 Common faults and solutions

Problem	Possible cause	Solution
Can not turn on the camera	Batteries are dead or incorrectly inserted	Insert the batteries correctly or Charge the batteries
	There are foreign objects in the battery compartment	Check and clean battery compartment
	Working temperature is too high or too low	Use in a place with suitable temperature
	Incorrect use	Reset camera. slide <ON/OFF> switch to "ON", use a thin needle or pin to press the RESET hole at the bottom of the camera.
Camera Powers off suddenly or Photos taken at night are black	Low battery	Charge the camera and replace the batteries with new ones
Does not read Memory card or save files	Memory card speed is too slow	Replace with a CLASS 10 or above memory card
	Memory card is damaged	Replace the memory card with a qualified one and

	or does not meet specifications	use the camera to format it
All buttons do not work	Short circuit when camera is connected to other device	Connect correctly, restart the camera
	Poor quality Memory card	Remove the Memory card, restart the camera.
Camera consumes a lot of power	Improper settings. Such as PIR interval is short, PIR sensitivity is high, IR brightness is high, video length is too long, take a lot photos, too many shots at night, etc.	Properly set camera parameters. Increase PIR interval, reduce PIR sensitivity and IR brightness, and set a shorter video length.Set to take fewer photos.
Water has gotten into the camera or the lens is foggy	The waterproof ring has fallen off or there is a foreign object	Check the waterproof rings, keep the waterproof rings clean, and make sure the waterproof rings are placed correctly
	The toggle hasps are not fastened or waterproof plug is not tightly covered.	Check and fasten all toggle hasps and cover the waterproof plug
	Improper installation or use, such as putting the camera in water	It is absolutely forbidden to immerse the camera in water. Install correctly, install the camera vertically with the top upward.
	If the camera works when the lens is foggy or water has gotten into the camera, power it off immediately and remove the batteries. Wipe away the water mist with a towel, open the camera cover, place it upright in a ventilated place, and let it dry completely before use.	
Incorrect password prompt	Forgot password	Enter the super password "1111" to enter the camera, set and remember a new password, or turn off the password protection.
Camera freezes while working	Low battery	Charge the camera, Replace with new batteries
	Damaged or poor quality memory card	Replace with a qualified memory card and format it with the camera, reset and restart the camera
Solar energy does not charge the camera or charges slowly	Foreign objects block the solar panel or there is dust on it.	Unblock and clean the solar panel
	Solar panel is in the wrong direction	Adjust the solar panel to a suitable direction, facing the sun
Camera functions are not normal	Wrong parameter setting	Set parameters correctly. If you don't know how to set it up, please restore the default settings and restart.
Camera does not	Turned on Time lapse or	Turn off Time lapse or Target recording time

shoot automatically	Target recording time function	function. If you don't know how to setup, please reset and restart the camera.
Can't change to "video mode" or "photo+video"	Time lapse is turned on	Turn off time-lapse. If you don't know how to setup, please reset and restart the camera.
Connection to the computer is abnormal	Wrong connection or Damaged USB cable	Correctly connect or Replace the USB cable
Video freezes when playing on computer	Computer configuration is too low	Use a computer that meets the requirements. Copy the files to your computer for playback.
Wi-Fi distance is short is unstable	There may be electromagnetic interference in the environment	Use in places with little electromagnetic interference
Playing video freezes in the APP	The video file is too large and takes a long time to buffer	Download the video to the local album and play it
Other problems	The camera can be powered on, but there are other unusual problems	The camera can be powered on, but other abnormalities occur. Please try the following: Charge the camera or replace the batteries, replace the memory card and format it with the camera, reset and restart the camera.
If the above methods do not solve the problem, please contact the dealer.		

7.2 Technical Specifications

Image sensor	CMOS sensor 2.0MP, Max 36.0MP (Interpolation)
Lens	F/1.6 f=4.15mm, FOV: 90°
Storage media	Support memory card, up to 256GB (not included)
PIR Trigger time	0.3 seconds
IR LEDs spec & qty	850nm/40pcs
PIR sensitivity	Low/ Middle/ High (optional)
PIR Sensing distance	0~20meters
PIR angle	90°
PIR Interval	5sec~60min (adjustable)
Screen	2.0 inch IPS screen
Working mode	Photo mode/Video mode/Photo + Video mode/ Time-lapse
Photo	JPEG; 1M/3M/5M/8M/12M/16M/20M/24M/36M
Video	AVI; 4K/10FPS，2.7K/30FPS，1080P/30FPS，720P/30FPS，VGA/30FPS
Video length	Adjustable, 3sec~10min
Microphone	Yes, built-in

Speaker	Yes, built-in
Temperature detection	Yes
Wi-Fi	Support, mobile phone-to-camera interconnection. APP: Victor Cam
Bluetooth	Support, mobile phone-to-camera interconnection.
Operating voltage	Lithium battery DC 3.7V, AA battery DC 6V
Battery type	Built-in lithium battery 5200mAH, compatible with 4 additional AA batteries
Standby time	About 6 month
Language	English, German, French, Italian, Spanish, Simplified Chinese, Japanese
Waterproof rating	IP66
Dimensions	171(H) x 104(L) x 90(D) mm
Weight	431±5g (excluding AA batteries)

FIP240112E10WH-ZX-CH-A10 (English version)

8 FCC WARNING

This device complies with part 15 of the FCC Rules. Operation is subject to the following two conditions: (1) this device may not cause harmful interference, and (2) this device must accept any interference received, including interference that may cause undesired operation.
Any changes or modifications not expressly approved by the party responsible for compliance could void the user's authority to operate the equipment.
NOTE: This equipment has been tested and found to comply with the limits for a Class B digital device, pursuant to Part 15 of the FCC Rules. These limits are designed to provide reasonable protection against harmful interference in a residential installation. This equipment generates, uses and can radiate radio frequency energy and, if not installed and used in accordance with the instructions, may cause harmful interference to radio communications. However, there is no guarantee that interference will not occur in a particular installation.
If this equipment does cause harmful interference to radio or television reception,
which can be determined by turning the equipment off and on, the user is encouraged to try to correct the interference by one or more of the following measures:
-- Reorient or relocate the receiving antenna.
-- Increase the separation between the equipment and receiver.
-- Connect the equipment into an outlet on a circuit different
from that to which the receiver is connected.
-- Consult the dealer or an experienced radio/TV technician for help.
To maintain compliance with FCC's RF Exposure guidelines, This equipment should be installed and operated with minimum distance between 20cm the radiator your body: Use only the supplied antenna.