IMPORTANT

Be Sure to Read this Manual Before Use

UNIS TECHNOLOGY

Operation Manual

WE ARE HERE TO ASSIST

For parts and service

Have Questions? Contact us!

UNIS SERVICE CENTER

Tel: 972-241-4263

Email:service@unispartsandservice.com

www.unispartsandservice.com

When contacting Service, you will need the following information and the name of your authorized distributor.

Suitable for Indoor Use Only	
NAME: Basketball Elite GMP	MAX POWER: 270W
MODEL: C-598	MIN POWER: 180W
VOLTAGE: AC220-240V～	FREQUENCY: 50/60Hz
S/N:	DATE:
Guangdong UNIS Technology Co.,Ltd.	

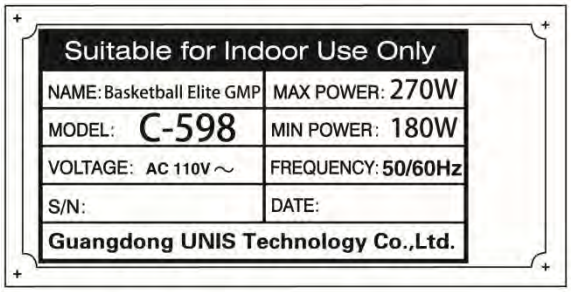

Suitable for Indoor Use Only	
NAME: Basketball Elite GMP	MAX POWER: 270W
MODEL: C-598	MIN POWER: 180W
VOLTAGE: AC 110V～	FREQUENCY: 50/60Hz
S/N:	DATE:
Guangdong UNIS Technology Co.,Ltd.	

UNIS Address: No. 1, Zhengan Road, West District, Zhongshan City, Guangdong Province, China

CONTENT

IMPORTANT SAFETY INSTRUCTIONS....3

1. SPECIFICATIONS....5

2.CONTENTS OF THE ACCESSORY KIT.... 7

3. PART NAME....8

4. SET UP & INSTALLATION.... 9

5. HOW TO PLAY.... 17

6. GAME OPTION.... 21

7. TROUBLESHOOTING....22

8. MAINTENANCE & INSPECTION....23

9. OVERALL CONSTRUCTION.... 26

10. WIRING DIAGRAM....39

APPENDIX 1....40

⚠ NOTICE

Visit our website www.unispartsandservice.com for informative set up/installation and service manuals along with video.

Thank you for purchasing **Basketball Elite GMP.** We hope you enjoy the product.

This manual contains valuable information about how to operate and maintain your game machine properly and safely. It is intended for the owner and/or personnel in charge of product operation. Carefully read and understand the instructions.
If you need any help during installation and setup please utilize this manual and troubleshooting guide. If the product fails to function properly, *non-technical personnel should under no circumstance attempt to service the machine*. Contact your distributor or manufacturer for help.

This appliance can be used by children aged from 8 years and above and persons with reduced physical,sensory or mental capabilities or lack of experience and knowledge if they have been given supervision or instruction concerning use of the appliance in a safe way and understand the hazards involved. Children shall not play with the appliance. Cleaning and user maintenance shall not be made by children without supervision
Use the following safety guidelines to help ensure your own personal safety and to help protect your equipment and surrounding environment from potential damage.

Before use, please read **IMPORTANT SAFETY INSTRUCTIONS**.

IMPORTANT SAFETY INSTRUCTIONS

To ensure the safe usage of this product, carefully read and understand these instructions before operating your game.
Save these instructions for future reference.

Use this product only as described in this manual. Other uses not recommended may cause fire, electric shock or personal injury. Unplug the game from the outlet when not in use, when moving from one location to another, and before cleaning/servicing.
Explanations which require special attention are indicated by signs of warning. Depending on the potential hazardous degree, the terms: **NOTE**, **NOTICE**, and **WARNING** are used.
NOTE: A NOTE indicates useful hints or information about product usage.
NOTICE: A NOTICE indicates potential damage to product and how to avoid the problem.
WARNING: A WARNING indicates a potential for product damage or serious personal Injury.
It is important to understand the meaning of the following HAZARD SIGNS before continuing:

High Voltage and Shock Hazard:

High voltage can cause electric shock.
Turn off/unplug power before servicing.

High Temperature Hazard:

This part may cause scalding.
Do not touch. Surface may be hot.

No Touching Hazard:

This part may be hot or can cause electric shock.
Do not touch.

⚠This product is an indoor game machine. Do not install outdoors.

Avoid installing in the following places to prevent fire, electric shock, injury and/or machine malfunctioning:

- Places subject to rain/moisture, or places subject to high humidity.
- Places subject to direct sunlight, or places subject to extremely hot or cold temperatures to ensure that it is used within the specified operating range.
- Places where inflammable gas may be present or in the vicinity of highly inflammable/volatile chemicals or items that can easily catch fire.
- On unstable or sloped surfaces. The machine may topple or cause unforeseen accidents.
- Vicinity of fire exits, fire extinguishers etc that may block/prevent safety measures.

IMPORTANT NOTE:

ALL REPAIRS MUST BE DONE TO ORIGINAL MANUFACTURER SPECIFICATIONS. FAILURE TO DO SO VOID ALL WARRANTIES AND OPERATOR ASSUMES ALL RISKS.

Note: The contents of this manual may be updated without notice.

1. SPECIFICATIONS

Rated power supply: AC110V 50/60Hz; AC220V 50/60Hz

Min. Power consumption: 180W

Max. Power consumption: 270W

Dimension: W31.97×D96.85×H97.6 in

W812 ×D2460 ×H2480 mm

Weight：Approximately 396.83 lb/ 180 kg

Part No: B137

Model No: C-598

⚠ **NOTICE:** After turning off the game, please wait at least 1 minute before restarting again.

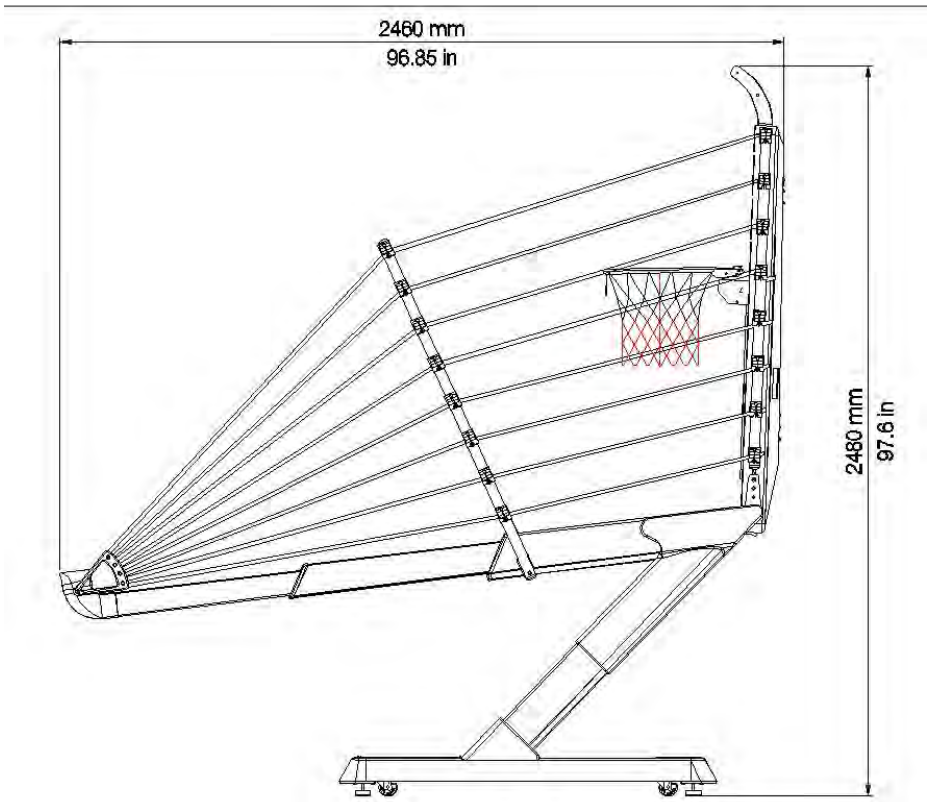

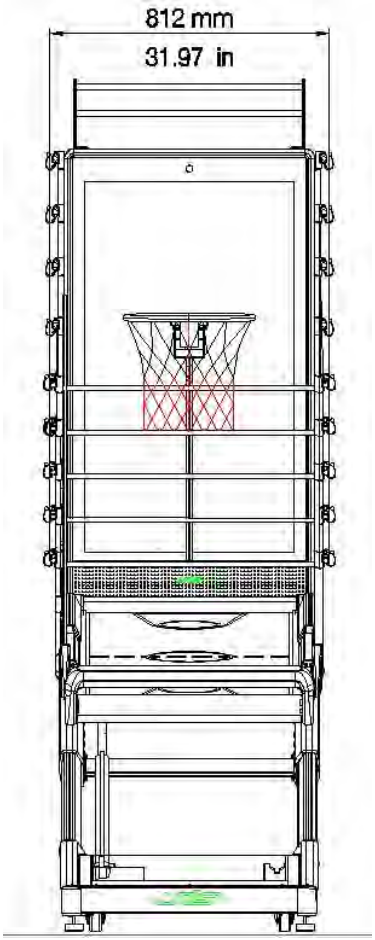

Note: Game specifications are subject to change without notice.

Packing Size:W30.7×D55×H34.65 in

W780 ×D1396 ×H880 mm

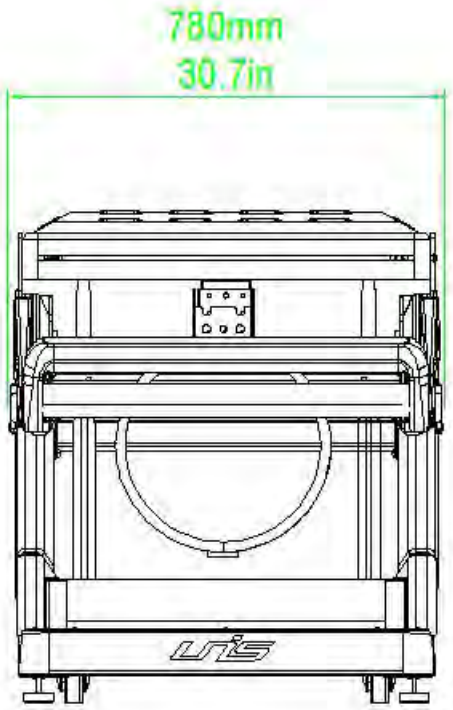

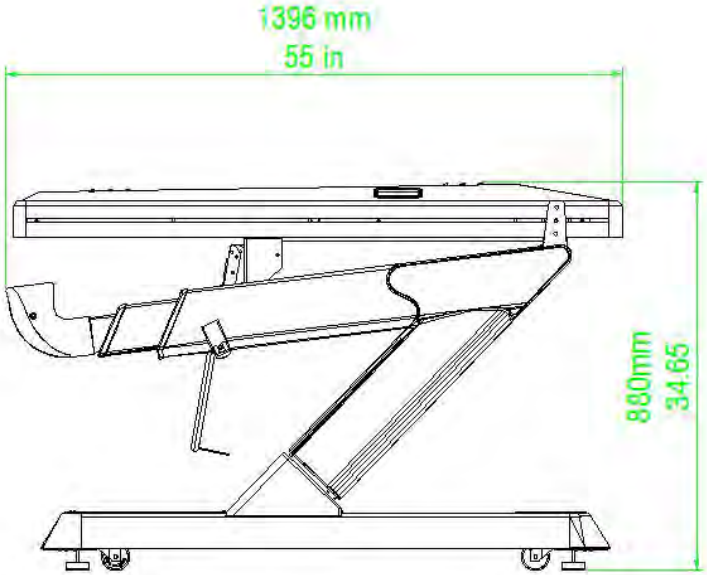

Note: Game specifications are subject to change without notice.

You can help protect the environment!
Please remember to respect the local regulations:
hand in the non-working electrical equipments to an appropriate waste disposal center.

2.CONTENTS OF THE ACCESSORY KIT

Open the package and make sure all the items are included:

No.	Part No.	Code	Name	SPEC	Picture	Qty
1	B137-801-000	2.33.01.010020	Power cord	3×16AWG 1.8M		1
2	B137-422-000	2.19.01.000012	Fuse	Φ5×20mm T5A 250VAC		1
3	B137-443-000	4.10.000023	Basketball	/		5
4	B137-802-000	4.06.07.000012	L wrench(5mm)	5mm		1
5	B137-803-000	4.06.07.000001	L wrench(4mm)	4mm		1
6	B137-341-000	201.01.106003	Hexagon socket flat head screw	M8×25		4
7	B137-305-000	201.01.008007	Hexagon socket flat head screw	M8×20		10
8	B137-321-000	201.01.048029	Hexagon socket flat head screw	M6×12	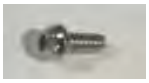	8
9	B137-322-000	201.01.048030	Hexagon socket flat head screw	M8x12		2
10	B137-320-000	201.01.048028	Hexagon socket flat head screw	M8x16		6
11	B137-804-000	4.14.40000315	Manual	GMP		1
12	B137-808-000	4.06.13.050002	Inflator pump	/		1

3. PART NAME

Key Components

Camera

Monitor

Hoop

Ball Track

Ball

Rope

Touch Screen/
Control Panel

Base Assembly

Control Panel:

Prev

Enter

Next

4. SET UP & INSTALLATION

⚠ NOTICE

We do not recommend using power tools as they may cause damage.

⚠ This product is an indoor game machine. Do not install outdoors.

- Refer to IMPORTANT SAFETY INSTRUCTIONS (Pg. 3) for places to avoid.
- Place the unit on a dry level surface.
- Ventilation openings in the back of the unit must not be obstructed by objects or by wall.

4.1 Transporting the Game

If you need to move the game, adjust the levelers back to an "up" position.

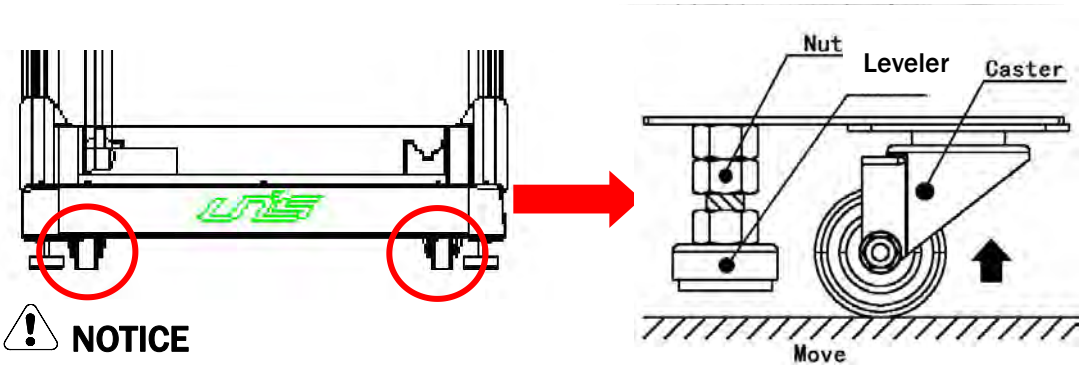

⚠ NOTICE

- Be careful not to damage the machine during transport.
- Always unplug the game before moving.
- Keep the machine in upright position during transport.
- For longer distance transport, package the game properly to prevent damages.

4.2 Level Adjustment

Install this game on a flat surface. If the game is installed on an unsuitable floor, it could cause game malfunction.

To secure the game, loosen the nut, utilize wrench to adjust the leveler down until it touches the floor, lifting the casters off the ground by 0.2in/5mm. Repeat the same for all levelers.

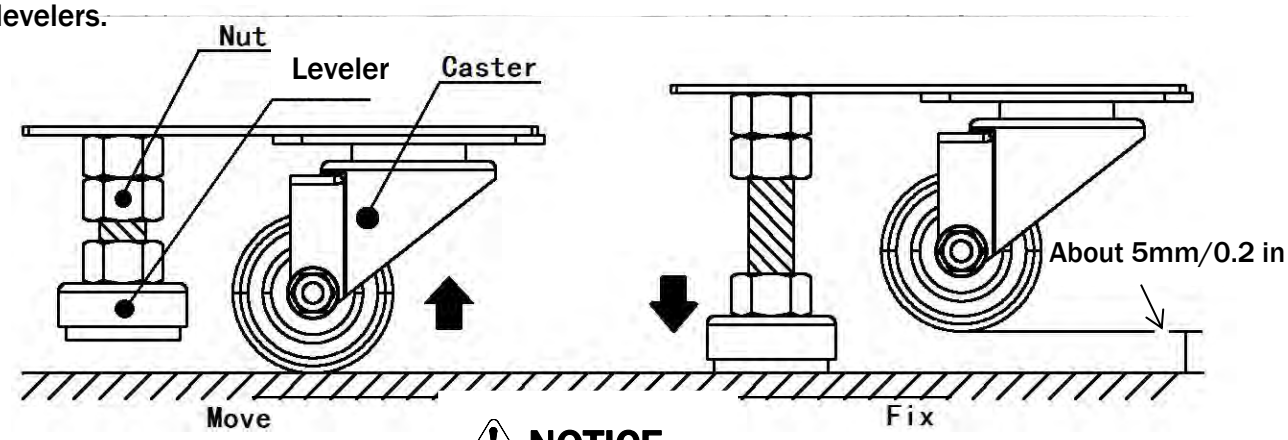

⚠ NOTICE

Make sure the machine is level.

4.3 Play Zone

This machine requires space for playing and for maintenance as shown below.
Leave space around the game upon installation:

Service area: 20 in

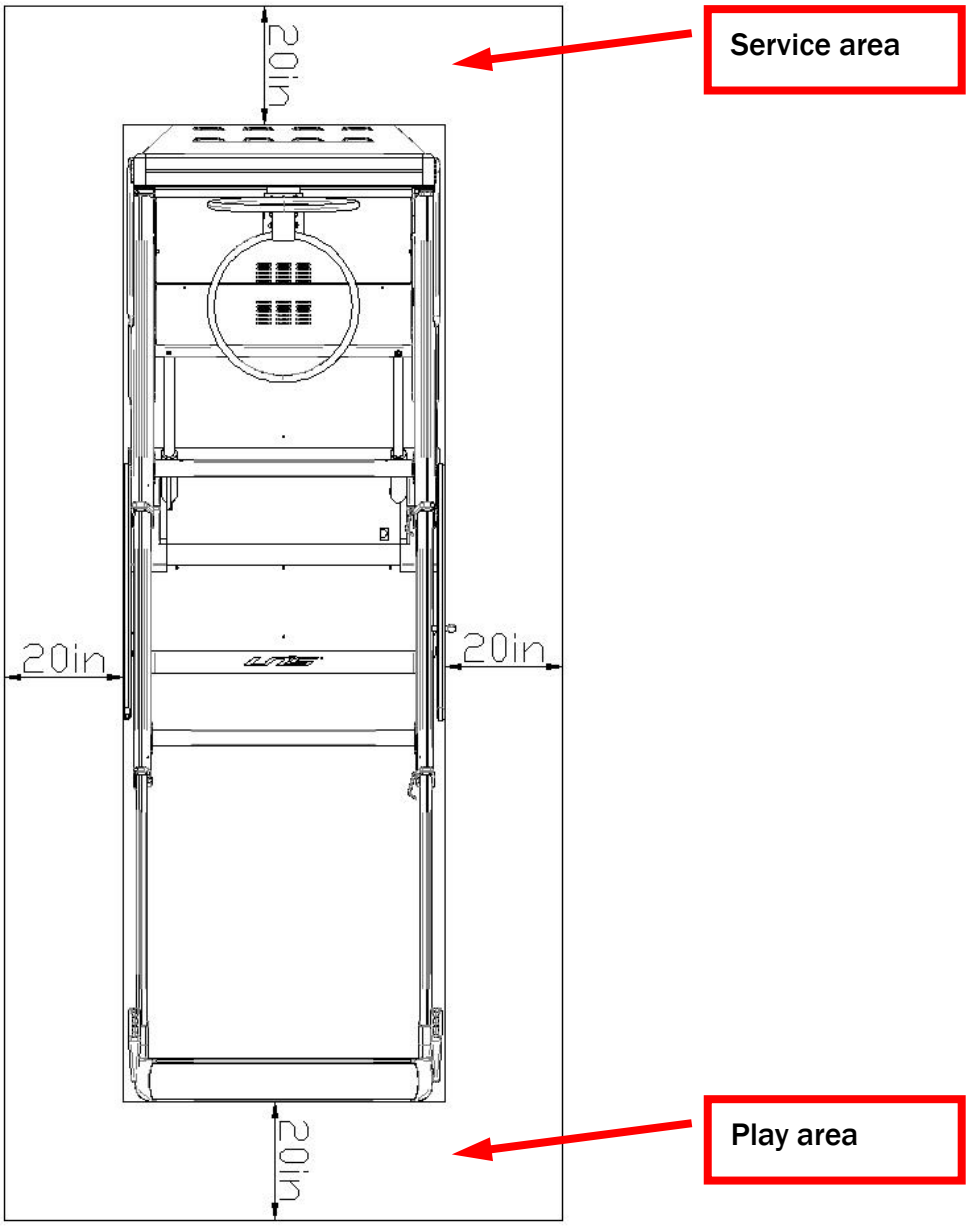

NOTICE

Your unit must be leveled to operate properly.

4.4 Machine Installation

Step 1 Utilize Allen wrench to tighten 4 screws to fasten the Top baffle to the Monitor Assembly.

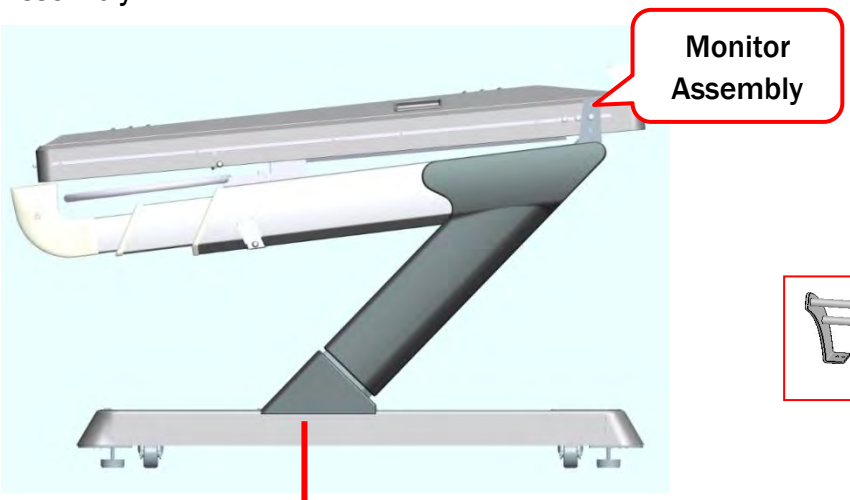

Name	Top baffle
Qty	1

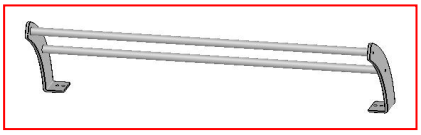

Name	Hexagon socket flat round head screw
Spec.	M6X12
Qty	4

Step 2 Lift the Monitor to the vertical position as shown below. Utilize Allen wrench to tighten 4 screws to secure the Monitor.

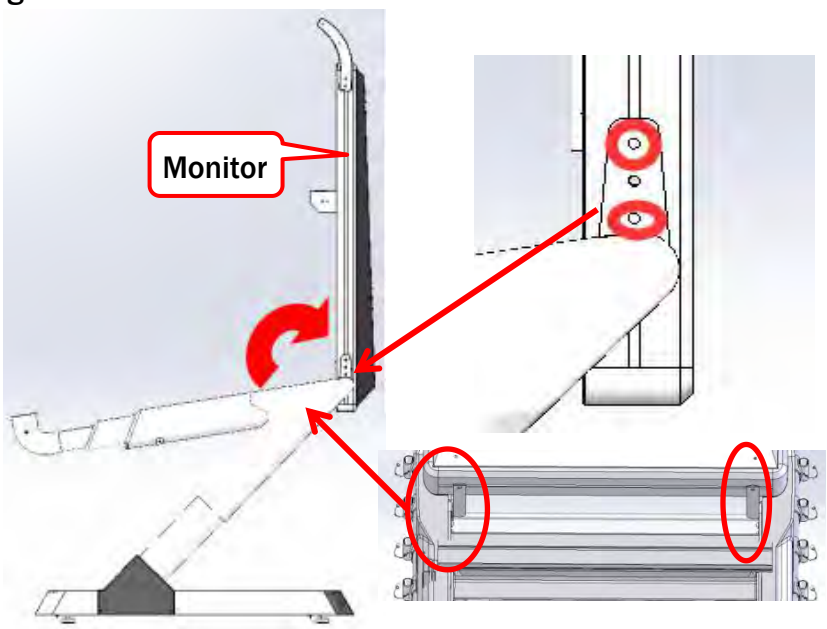

Name	Hexagon socket flat round head screw
Spec.	M8X16
Qty	4

Name	Hexagon socket flat round head screw
Spec.	M8X12
Qty	2

Step 3 Install Hoop. Utilize Allen wrench to tighten 4 screws.

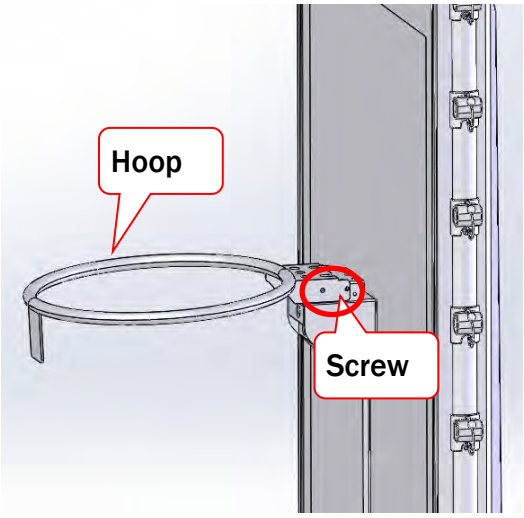

Name	Hexagon socket flat round head screw
Spec.	M6X12
Qty	4

Step 4 Loosen 2 quick screws to extend the Ball track plate. Tighten the screw back after extending the Ball track.

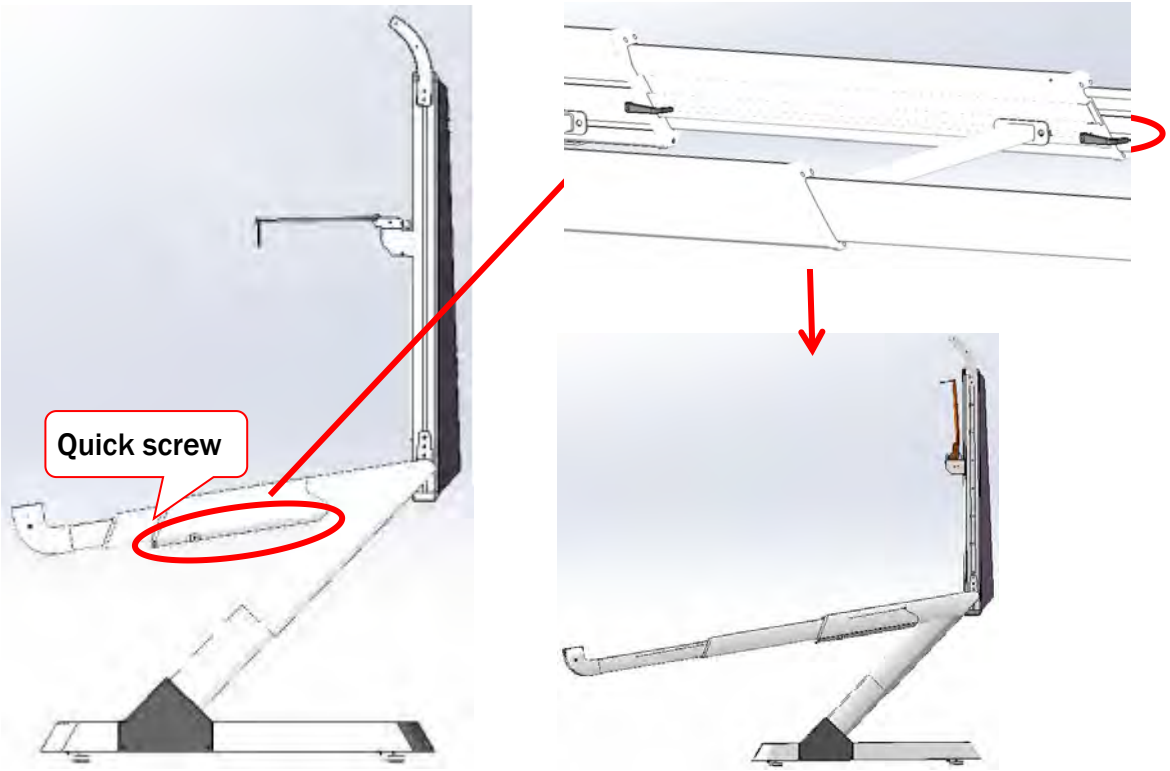

Name	Quick screw
Qty	4

Step 5 Utilize Allen wrench to tighten 4 screws to fix the Ball guard assembly to the Ball track inside.

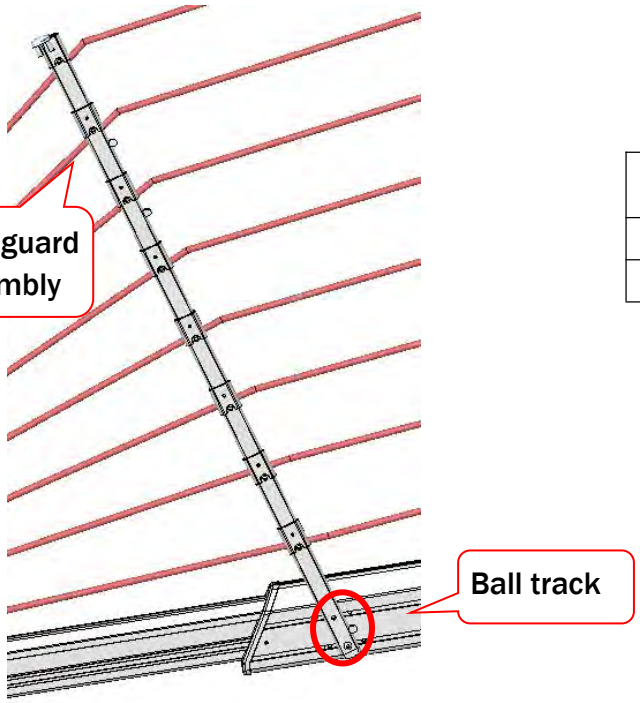

Name	Hexagon socket flat round head screw
Spec.	M8X25
Qty	4

Step 6 Utilize Allen wrench to tighten screws to secure the Triangle plate and Rope back plate. Utilize Plastic ball to secure Rope.

Name	Hexagon socket flat round head screw
Spec.	M8X16
Qty	2

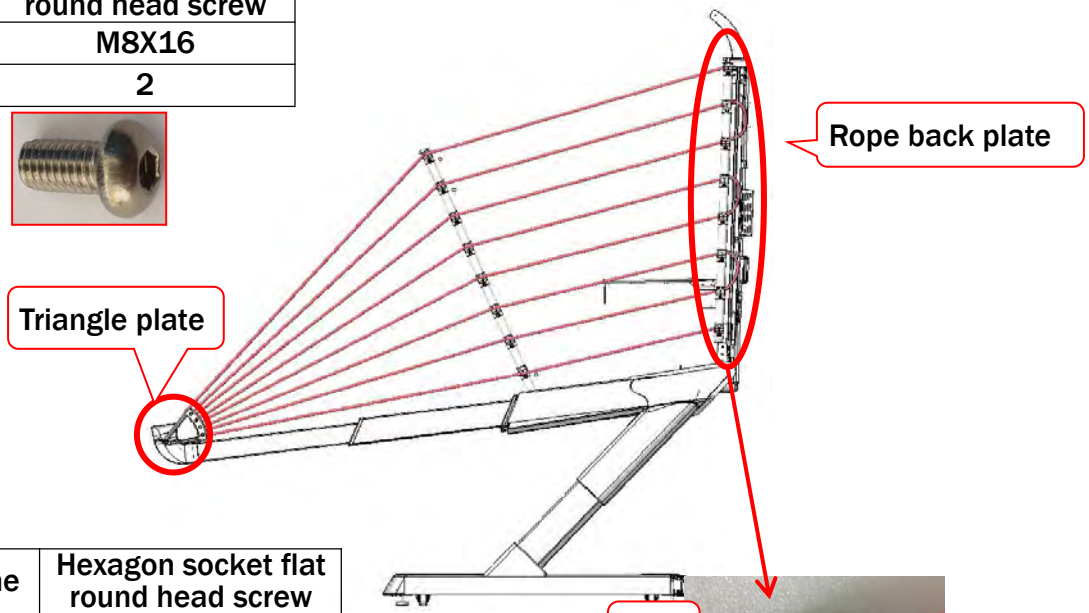

Name	Hexagon socket flat round head screw
Spec.	M8X20
Qty	10

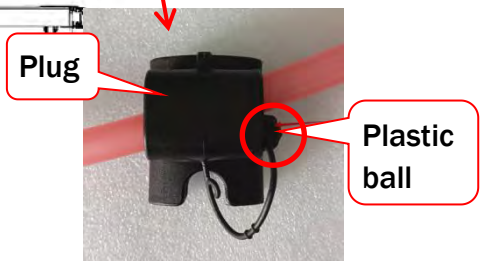

Step 7 Locate the Ball track bottom side. Utilize Handle nut to adjust Ball track plastic.

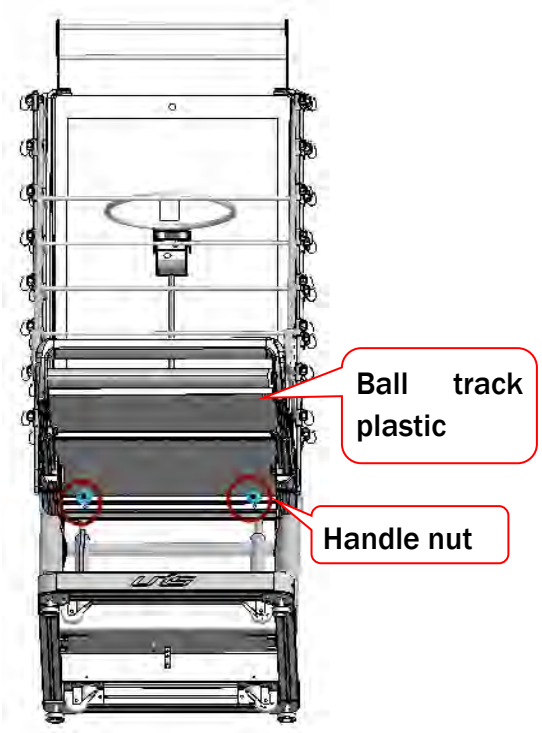

Step 8 Power on the machine. Select game and press ○ to enter the game.

Note: This process should be carried out every time after power on the machine.

Step 9 Long press ››› button for 10 seconds to enter Game settings to adjust machine height. Press Back&Save to enter the game.

Finish!

4.5 Network Linking Instruction

Note: Before process this step, machine need to install Antenna and update system. Please refer to Appendix 1.

Step 1 For IOS user, please download "Exergames" APP on App Store.
For Android user, please download this app to your phone at the link below:
http://us.elite.shiyugame.com/views/Exergames.apk .

Step 2 Power on the machine.

Step 3 Select Wi-Fi to connect.

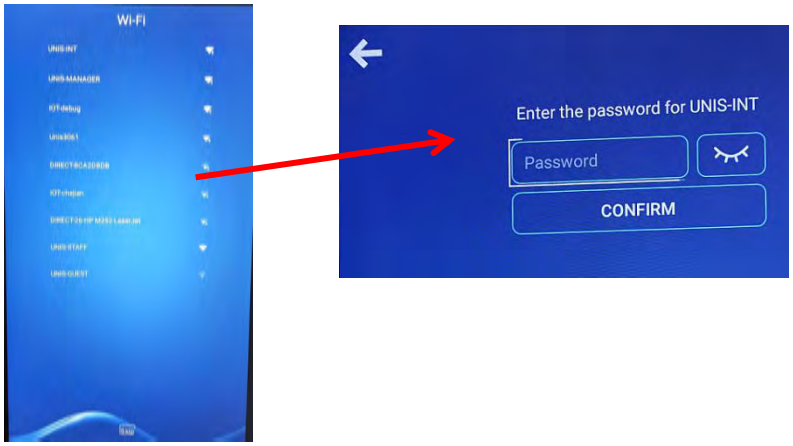

Step 4 Open "Exergames" APP on phone. Sweep the QR code on the monitor and log in.

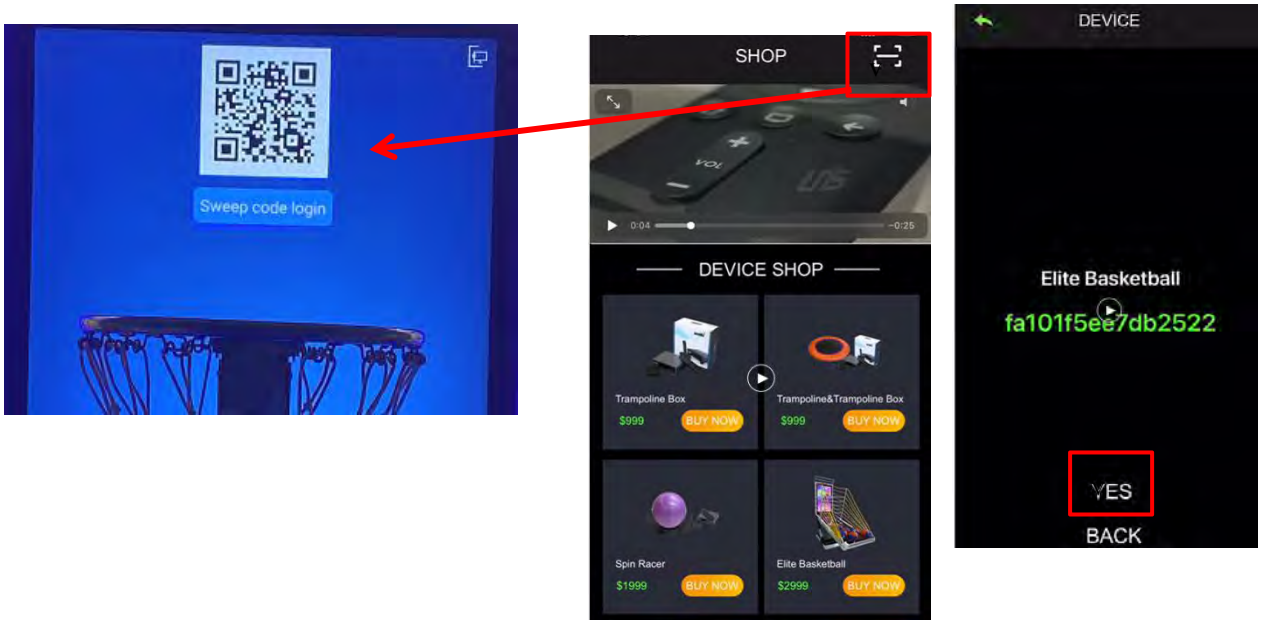

Step 4 Select Elite Basketball to enter the game.

Long press ❯❯❯ button for 10 seconds to enter Game settings - Version, select "Online".

4.6 Game Update Instruction

1. Long press button for 10 seconds to enter Game settings, select "Exit Game" to enter Game list.

2. Select Game management icon. Press Password "8888" to confirm.

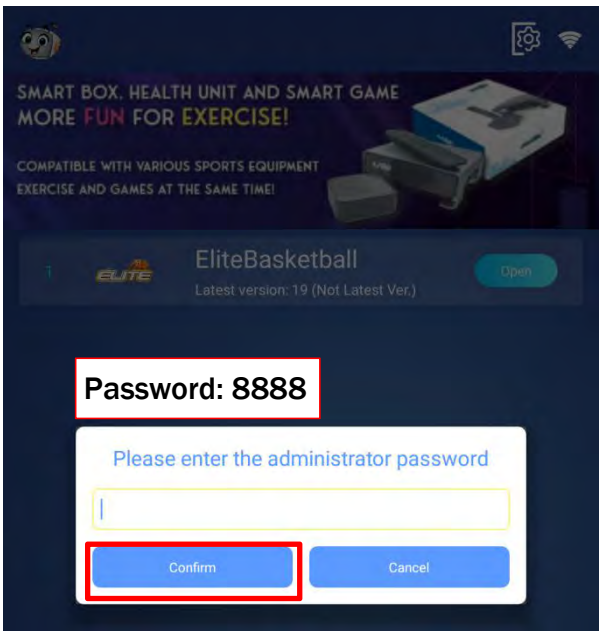

3. Select and press to update.

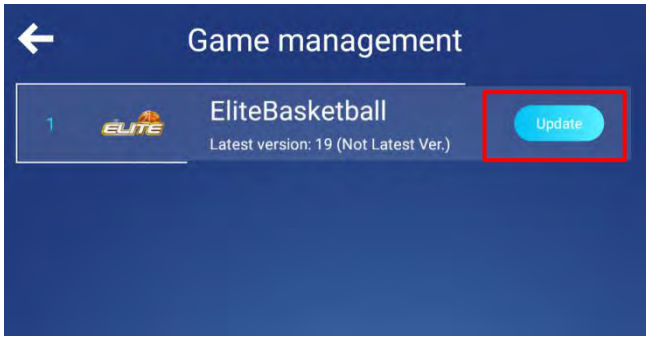

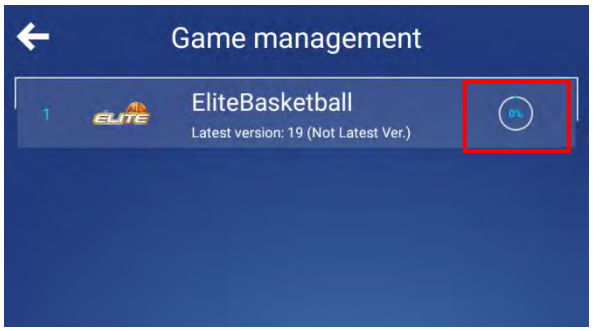

5. HOW TO PLAY

Notice: This machine has three game modes: Game Mode, Fitness Mode and Match Mode.

Game Mode appears when machine version is set to “Offline”;

Fitness Mode and Match Mode appear when machine version is set to “Online”;

1. Touch button to start and choose a mode.

2. Game Mode has 4 rounds. Each round requires the player to shoot the balls in a limited time to reach the target score and pass the stage.

2.1 Round 1: Shoot balls in limited time to reach the target score to pass the stage.

2.2 Round 2: Shoot balls to reach the target score to pass the stage. (The field goal percentage and speed will influence the score you get every time.)

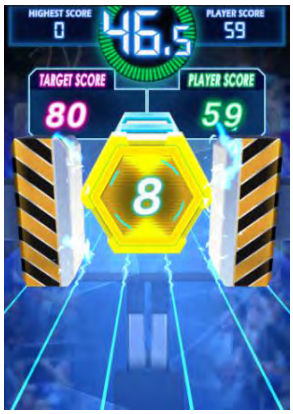

2.3 Round 3: Shoot the balls and the horizontal line will increase. If the horizontal line reaches the top line, the player passes the stage.

2.4 Round 4: There is a scoring area with different points. When you field the goal, you get the point in the scoring area where the basketball in the monitor is on.

2.5 Ranking List shows the player's local games ranking, challenge stage and score.

3. Fitness Mode has 3 different levels:"30s Challenge","60s Challenge" and "Endless Challenge".

3.1 In 30s Challenge and 60s Challenge, the number of shots is increasing, the skill level of evaluation will also be upgraded.

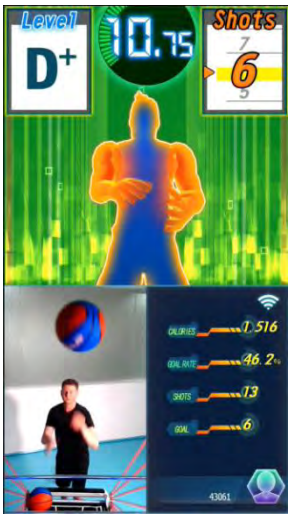

3.2 In the Endless Challenge, player can shoot the ball without any time limit. Hold ○ to stop the game.

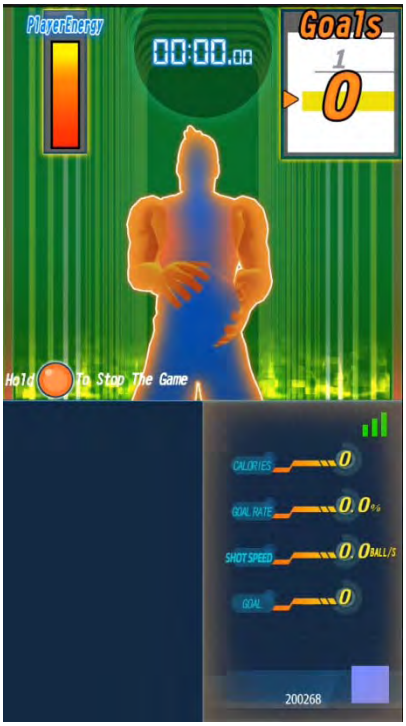

3.3 The game records the shots, real-time movement status, etc, and finally summarizes the player's physical test result.

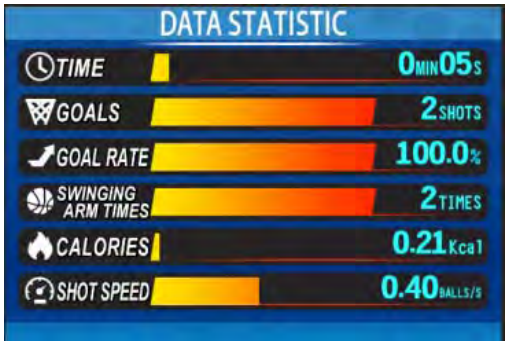

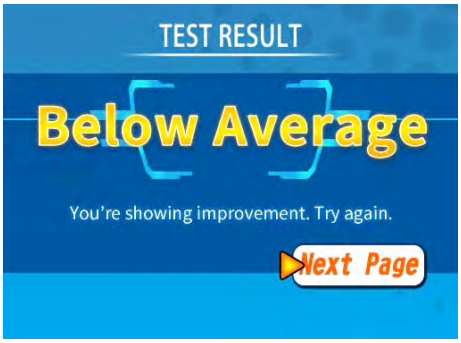

4. Match Mode have different contests to select to play with other players. The rankings of the event can be shown in the "Exergames" application.

6. GAME OPTION

Locate Control panel. Long press button for 10 seconds to enter Game settings.

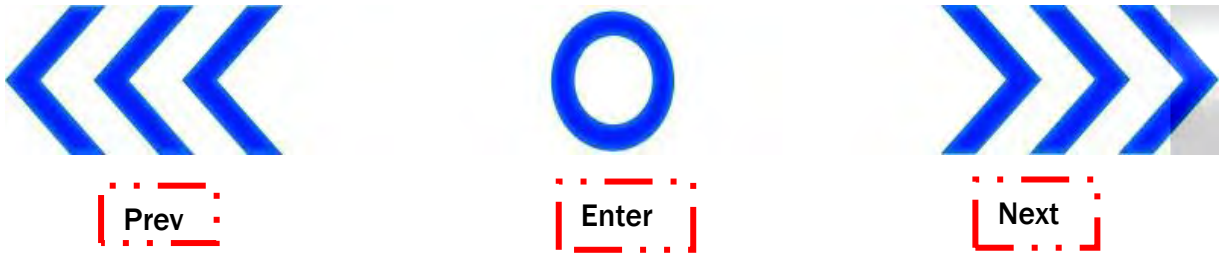

Options	Status	Description
Version	Offline/Online	Select offline to play Game mode; Select Online to play Fitness and Match mode, need to connect network.
Language	中文/English	Adjust language
Mode Time	60-120s	Adjust game time The default is 90
Machine Height	Up ————Down	Adjust Machine height
Volume	Min ————Max	Adjust Volume
Camera Test	ON/OFF	Test Camera The default is OFF
Demo Music	ON/OFF	Demo Music open or off The default is ON
Match Mode	ON/OFF	
Fitness Mode	ON/OFF	
Exit Game	Press button to confirm	Back to Game list
Back& Save	Press button to confirm	Back to Game

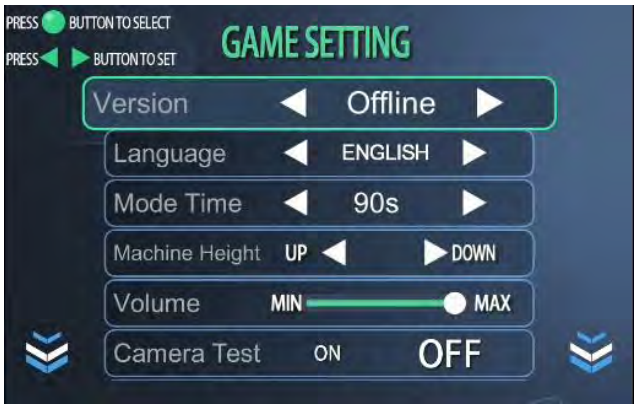

7. TROUBLESHOOTING

7.1 Common Problem

Please confirm that all connectors fit tightly.

Symptom	Possible Cause	Recommended action
No sound	Low volume	Raise the volume.
	Connector loose.	Check connector.
	Speaker fault.	Check speaker.
	Audio cable problem.	Reconnect the audio cable or change it.
	Driver problem	Restart the audio driver.
Display black screen	Check connectors.	Plug in connector tightly
	Display fault.	Please call the service department for assistance
Display blue screen	VGA signal cable is loose.	Check VGA cable

Note: After replacing component and replacing monitor, the game should be recovered again with the recovery stick attached to the machine.

If you see following error signs showing on the display, please try the recommended action.

Display	Possible Cause	Recommended action
	The connection part of the board are loose.	Check and reconnect the loose ports of the IO board.
	Cable quality problem	Change the cable after checking the connection between IO board.
	Cable became loose during transportation.	Check and reconnect the loose cables of the IO board.
	IO board is faulty.	Please call the service department for assistance.

7.2 System Recovery Operation (NOTE: Do not disconnect power during this process.)

1. Turn off the game. Remove the recovery stick from the holder. (Note: This process may take up to 30s)

2. Turn game on. Insert the recovery stick into the port of the Mainboard.

Note: Don't insert the recovery stick into your Mainboard while is powering on the machine.

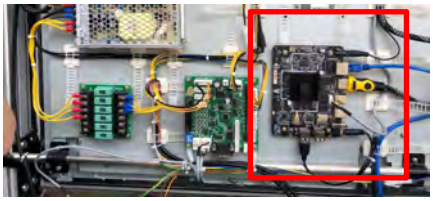

4. The system recovery screen as shown.

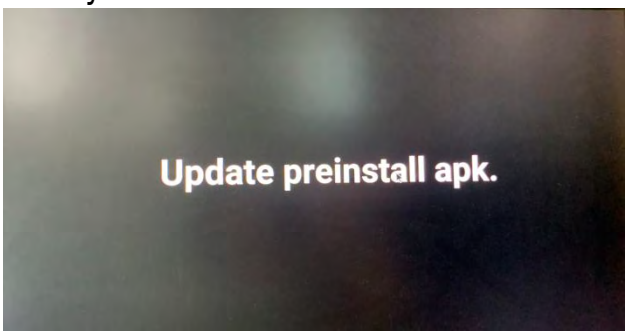

5. The game will automatically start recovery.

6. Once system recovery is finished and the Game list screen appear, remove the recovery stick from the Mainboard.

6.Assure that the recovery stick has been properly secured for future use.

⚠ **WARNING**: The recovery stick should only be used to fix software errors. Using it for other purposes may cause unexpected results and damages.

8. MAINTENANCE & INSPECTION

8.1 Safety Check

Check the points listed before operating the machine. These checks are necessary for safe machine operation:

1. Test game before operation each day.
2. Conduct monthly routine checks of game components to ensure good working condition.
3. Check the machine regularly for dust and clean when necessary.

Note: Parts and components require preventative maintenance to maintain proper operation.

8.2 Handling Precautions

When installing or inspecting the machine, be very careful and pay attention to ensure that the player can enjoy the game safely.

Inappropriate handling running counter to the cautionary matters can cause personal injury or damage to the machine.

⚠ **NOTICE**

We do not recommend using power tools as they may cause damage.

8.3 Rope Replacement Instruction

1. Remove Triangle plate screws. Remove the top and the bottom side rope nut of the Rope back plate. Remove all the rope out.

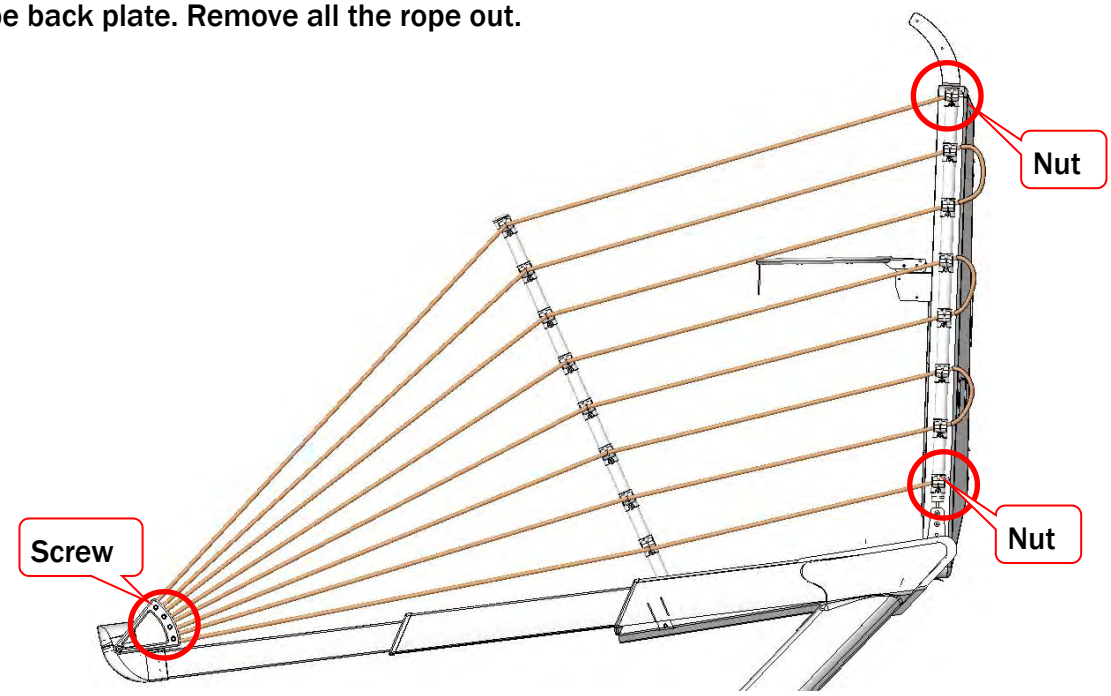

2. Place a new rope through to the Rope back plate bottom side.
3. Lead the Rope through to the Ball guard assembly, Triangle plate and Rope back plate in order.

Note: Fasten a screw for each time through the rope Triangle plate.

4. Utilize Allen Wrench to fasten nut to the two ends of the rope.

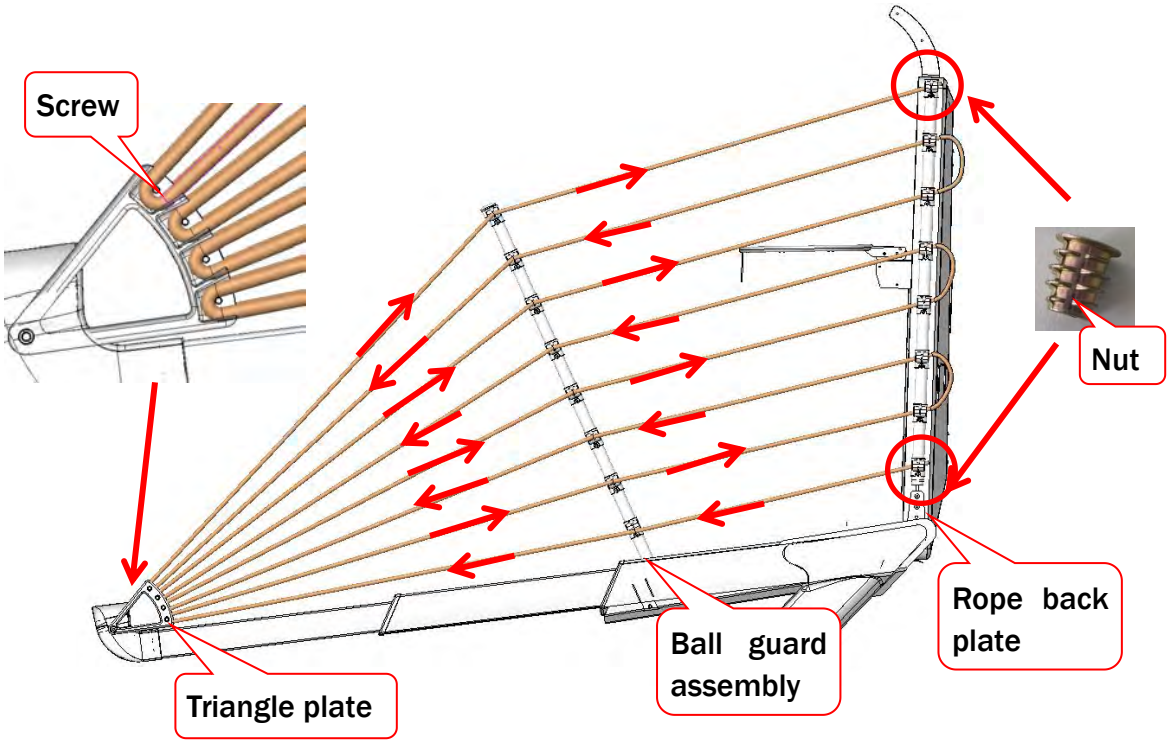

5. Utilize Plastic ball to secure Rope. Pull the Rope as picture shown to fasten the rope.

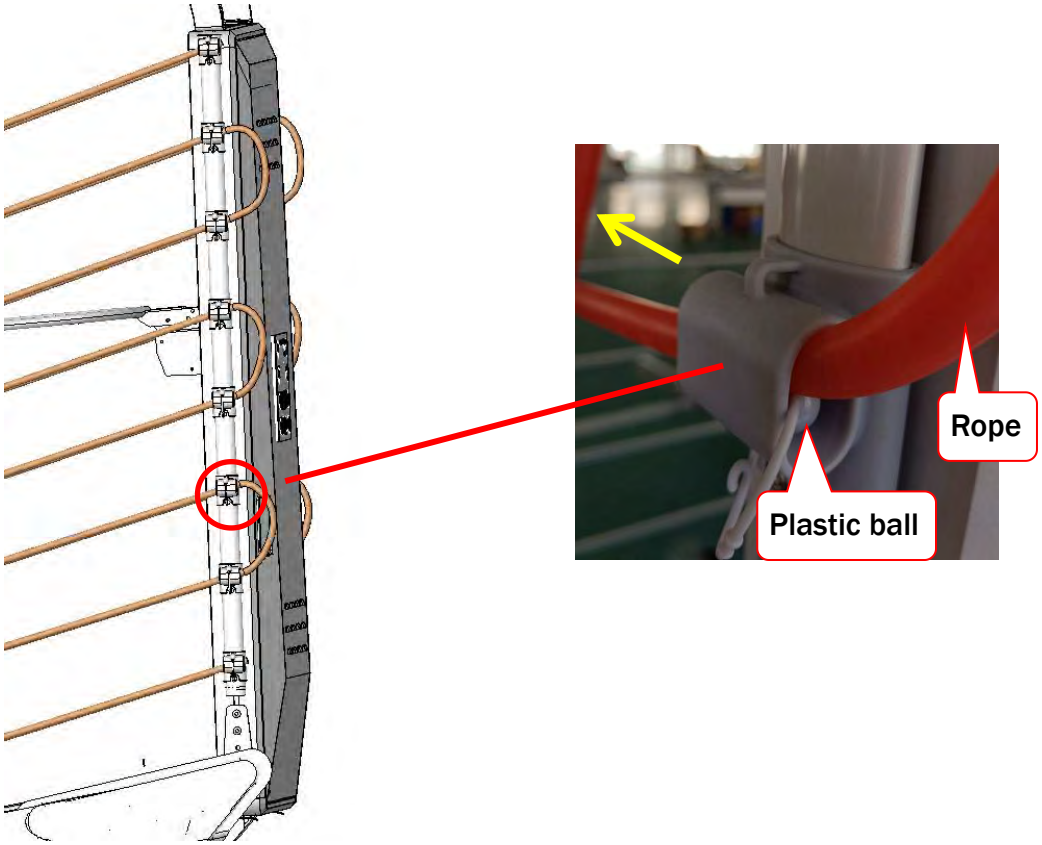

8.4 Machine Cleaning Instruction

1. Turn off the machine. Utilize non-woven fabric with distilled water to clean the monitor,control panel and ball track plastic.

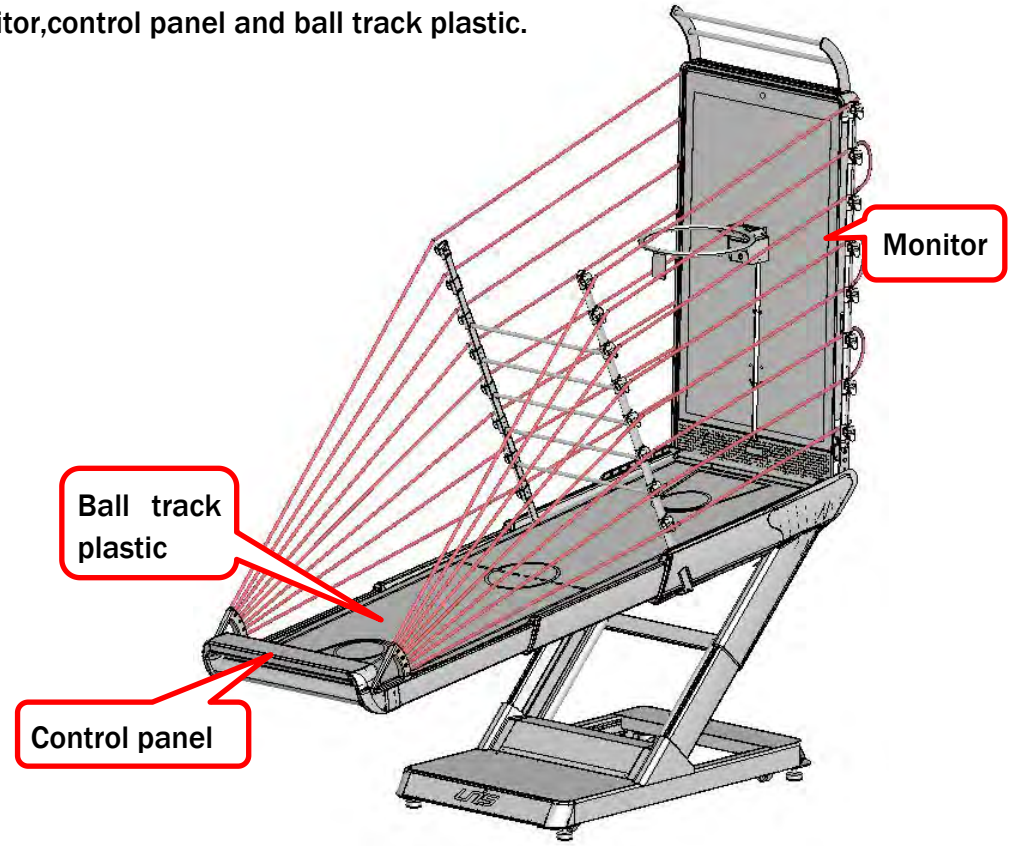

9. OVERALL CONSTRUCTION

9.1 Base Assembly

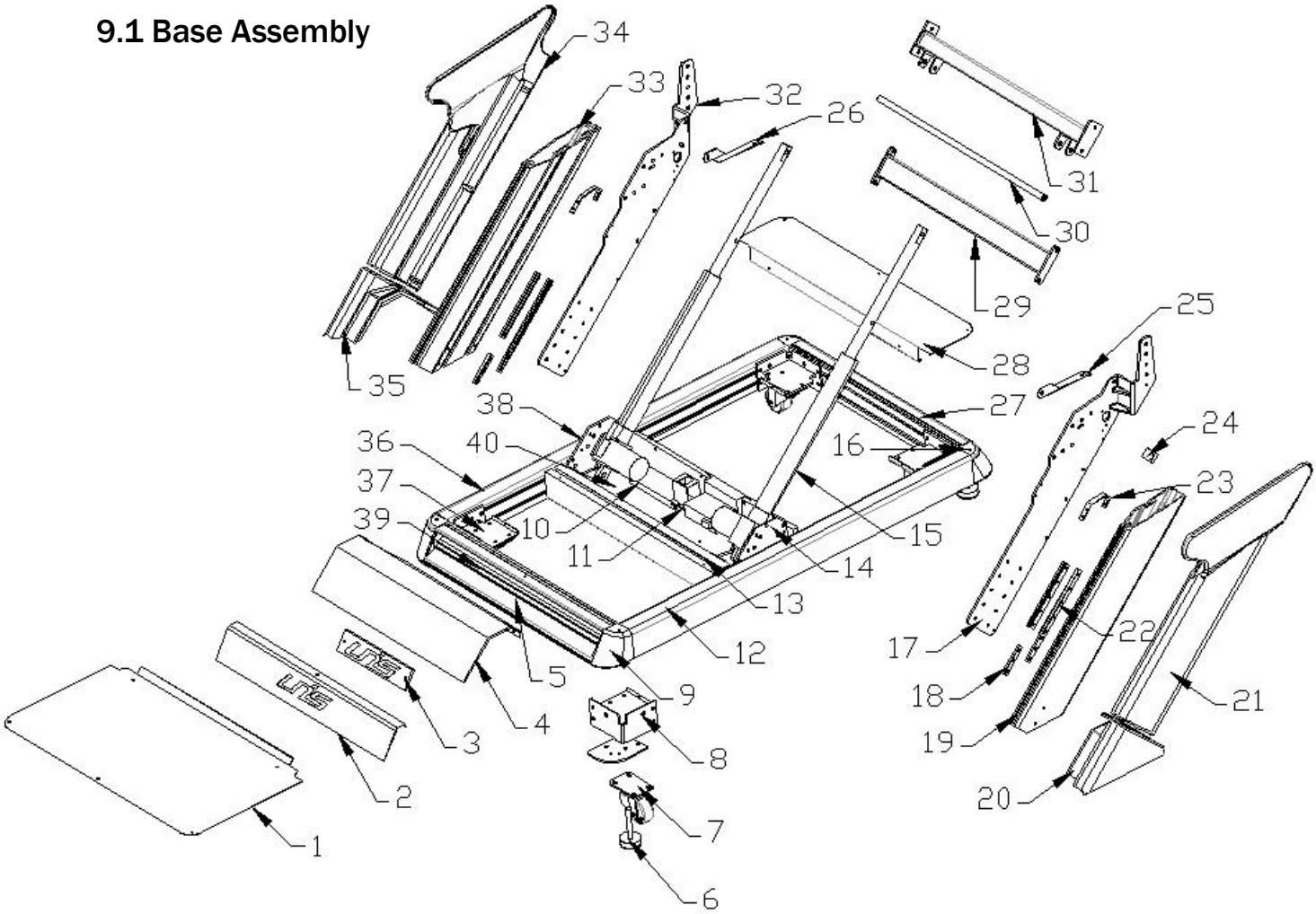

No.	Part No.	Code No.	Name	Version	Qty
1	B137-120-001	202.1.2003.015	Front cover plate	1.2	1
2	B137-119-001	202.1.2003.014A	LOGO plate	1.2	1
3	B137-190-000	206.1.2003.002	LOGO light plate	1.1	1
4	B137-121-000	202.1.2003.016	Middle cover plate	1.2	1
5	B137-163-001	202.1.2003.058	Base metal plate	1.2	1
6	B137-432-000	2.51.00.010001	leveller	1.1	4
7	B137-442-000	2.55.01.000047	2.5'' caster	1.1	4
8	B137-116-000	202.1.2003.011	R base connect plate	1.1	2
9	B137-194-001	206.1.2003.006	R cover	1.2	2
10	B137-150-001	202.1.2003.045A	Power supply connect plate	1.2	2

No.	Part No.	Code No.	Name	Version	Qty
11	B137-151-001	202.1.2003.046A	Rocket switch plate	1.2	1
12	B137-164-001	202.1.2003.059A	R base plate	1.2	1
13	B137-166-001	202.1.2003.061A	Middle base plate	1.2	1
14	B137-118-000	202.1.2003.013	R pin connect plate	1.1	1
15	B137-437-000	2.51.05.040012	Push rod	1.1	2
16	B137-193-002	206.1.2003.005	L cover	1.3	2
17	B137-125-003	202.1.2003.020	R rod connect plate	1.4	1
18	B137-168-000	202.1.2003.063	T type plate	1.1	4
19	B137-169-000	202.1.2003.064	R pin plate	1.1	1
20	B137-211-002	206.1.2003.023	R pin cover	1.3	1
21	B137-214-002	206.1.2003.026	R protect plate	1.3	1
22	B137-171-000	202.1.2003.066	T rail plate	1.1	4
23	B137-152-001	202.1.2003.047A	Chain upper plate	1.2	2
24	B137-153-001	202.1.2003.048A	Chain bottom plate	1.2	2
25	B137-184-001	202.1.2003.079A	R pin plate	1.2	1
26	B137-183-001	202.1.2003.078A	L pin plate	1.2	1
27	B137-165-001	202.1.2003.060A	Back base plate	1.2	1
28	B137-122-001	202.1.2003.017	Back cover plate	1.2	1
29	B137-124-001	202.1.2003.019A	Horizontal connect plate	1.2	1
30	B137-138-000	202.1.2003.033	Ball track plate	1.1	1
31	B137-123-000	202.1.2003.018	Connect plate	1.1	1
32	B137-126-001	202.1.2003.021	L rod connect plate	1.2	1
33	B137-170-000	202.1.2003.065	L pin plate	1.1	1
34	B137-213-002	206.1.2003.025	L protect plate	1.3	1
35	B137-212-002	206.1.2003.024	L pin cover	1.3	1

No.	Part No.	Code No.	Name	Version	Qty
36	B137-167-001	202.1.2003.062A	L base plate	1.2	1
37	B137-115-000	202.1.2003.010	L base connect plate	1.1	2
38	B137-117-000	202.1.2003.012	L pin connect plate	1.1	1
39	B137-187-000	203.1.2003.003	Light strip support plate	1.1	1
40	B137-189-002	203.1.2003.005	Middle support plate	1.3	1

9.2 Hoop&Monitor Assembly

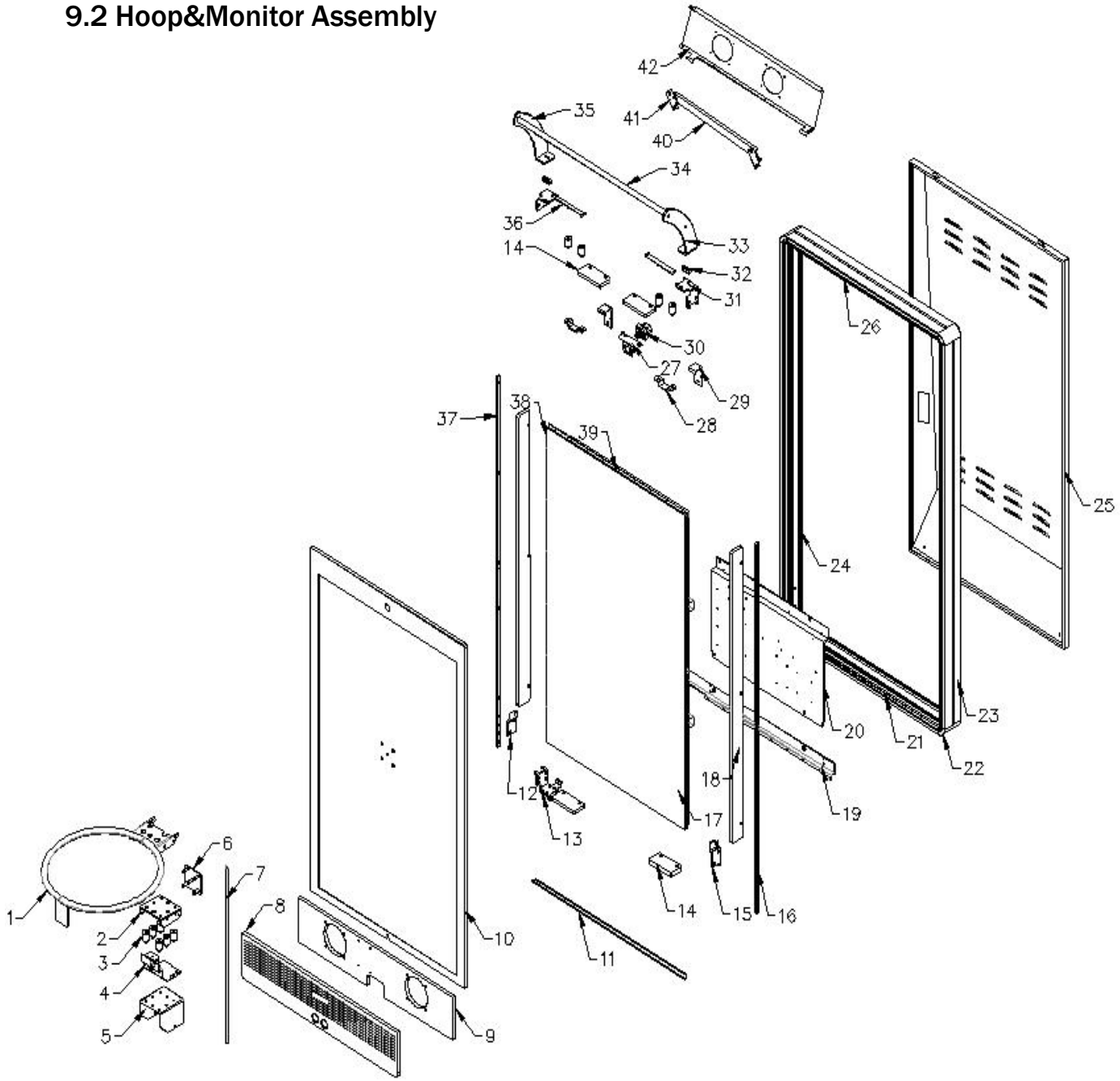

No.	Part No.	Code No.	Name	Version	Qty
1	B137-110-003	202.1.2003.005	Hoop	1.4	1
2	B137-109-002	202.1.2003.004	Hoop plate	1.3	1
3	B137-105-000	2.60.00071001	Shakeproof screw	1.1	10
4	B137-111-003	202.1.2003.006A	Sensor plate	1.4	1
5	B137-108-001	202.1.2003.003	Hoop bracket	1.2	1
6	B137-107-000	202.1.2003.002	Hoop fixing plate	1.1	1
7	B137-182-002	202.1.2003.077	Sensor cable tube	1.3	1
8	B137-106-001	202.1.2003.001	Speaker plate	1.2	1
9	B137-188-001	203.1.2003.004	Speaker support plate	1.2	1
10	B137-712-000	205.1.2003.001	Monitor decal	1.1	1
11	B137-154-000	202.1.2003.049	T molding	1.1	1
12	B137-143-003	202.1.2003.038A	Monitor L bottom plate	1.4	1
13	B137-140-001	202.1.2003.035A	L frame plate	1.2	1
	B137-141-001	202.1.2003.036A	R frame plate	1.2	1
14	B137-186-002	203.1.2003.002	Short pressing plate	1.3	2
15	B137-142-003	202.1.2003.037A	Monitor R bottom plate	1.4	1
16	B137-160-000	202.1.2003.055	Frame t type plate	1.1	2
17	B137-402-001	1.9.2011	49’’ monitor	1.2	1
18	B137-185-002	203.1.2003.001	Long pressing plate	1.3	2
19	B137-148-001	202.1.2003.043A	Monitor support plate	1.2	1
20	B137-149-003	202.1.2003.044A	PC plate	1.4	1
21	B137-158-003	202.1.2003.053	Monitor frame bottom plate	1.3	1
22	B137-192-001	206.1.2003.004	Circle protective plate	1.2	4
23	B137-155-003	202.1.2003.050	Monitor frame L plate	1.3	1
24	B137-156-003	202.1.2003.051	Monitor frame R plate	1.3	1
25	B137-114-004	202.1.2003.009A	Monitor back cover plate	1.5	1

No.	Part No.	Code No.	Name	Version	Qty
26	B137-157-003	202.1.2003.052	Monitor frame top plate	1.3	1
27	B137-147-001	202.1.2003.042A	Camera plate	1.2	1
28	B137-144-001	202.1.2003.039A	Shakeproof screw plate	1.2	2
29	B137-145-001	202.1.2003.040A	Buckle	1.2	2
30	B137-405-000	2.11.07.040029	Camera	1.1	1
31	B137-139-001	202.1.2003.034A	Top frame plate	1.2	2
32	B137-161-000	202.1.2003.056	M6 T type plate	1.1	2
33	B137-112-001	202.1.2003.007	Top baffle R plate	1.2	1
34	B137-159-000	202.1.2003.054	Top baffle plate	1.1	2
35	B137-113-001	202.1.2003.008	Top baffle L plate	1.2	1
36	B137-146-001	202.1.2003.041A	Shakeproof screw connect plate	1.2	2
37	B137-162-000	202.1.2003.057	Monitor frame plate(Long)	1.1	2
38	B137-215-004	206.1.2003.027	Foam(Long)	1.5	2
39	B137-216-004	206.1.2003.028A	Foam(Short)	1.5	2
40	B137-219-000	202.1.2003.085	Frame plate	1.1	1
41	B137-218-000	202.1.2003.084	Frame corner plate	1.1	2
42	B137-217-000	202.1.2003.086	Fan support plate	1.1	1

9.3 Ball Track Assembly

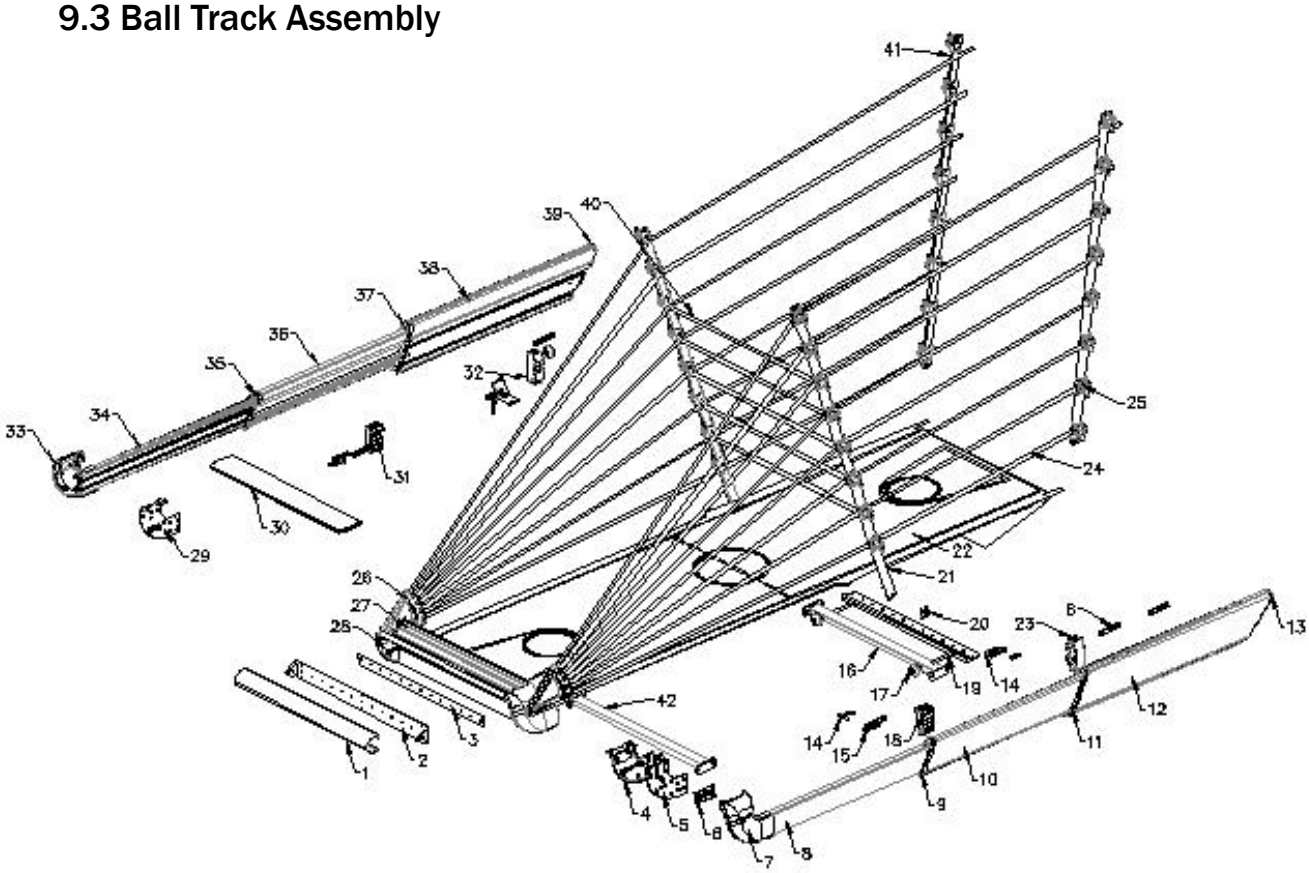

No.	Part No.	Code No.	Name	Version	Qty
1	B137-134-002	202.1.2003.029A	Ball track front cover plate	1.3	1
2	B137-132-002	202.1.2003.027A	Ball track front plate	1.3	1
3	B137-133-002	202.1.2003.028A	Ball track pressing plate	1.3	2
4	B137-196-000	206.1.2003.008	Control panel R inner plate	1.1	1
5	B137-130-002	202.1.2003.025	Control panel R connect plate	1.3	1
6	B137-168-000	202.1.2003.063	T type plate	1.1	12
7	B137-195-003	206.1.2003.007	Control panel R outer plate	1.4	1
8	B137-172-001	202.1.2003.067	R track plate(S)	1.2	1
9	B137-201-000	206.1.2003.013	R track cover(M)	1.1	1
10	B137-174-001	202.1.2003.069A	R track plate(M)	1.2	1
11	B137-205-000	206.1.2003.017	R track cover(L)	1.1	1
12	B137-176-002	202.1.2003.071	R front track plate(L)	1.3	1

No.	Part No.	Code No.	Name	Version	Qty
13	B137-207-000	206.1.2003.019	R track protective plate(L)	1.1	1
14	B137-434-000	201.01.009004	Handle screw(adjust)	1.1	2
15	B137-161-000	202.1.2003.056	M6 T type plate	1.1	6
16	B137-433-001	201.01.009003	Handle screw	1.2	2
17	B137-199-000	206.1.2003.011	R track protective plate(S)	1.1	1
18	B137-137-002	202.1.2003.032	Ball track back plate	1.3	1
19	B137-210-000	206.1.2003.022	Rope sleeve	1.1	8
20	B137-179-001	202.1.2003.074A	Rope front plate	1.2	2
21	B137-713-001	205.1.2003.002	Ball track plastic	1.2	1
22	B137-203-000	206.1.2003.015	R track protective plate(M)	1.1	1
23	B137-440-000	2.51.08.030002	Rope	1.1	40
24	B137-191-000	206.1.2003.003	Plug&Rubber circle	1.1	32
25	B137-209-000	206.1.2003.021	Triangle plate	1.1	2
26	B137-178-000	202.1.2003.073	Control panel plate	1.1	1
27	B137-197-000	206.1.2003.009	Control panel L inner plate	1.1	1
28	B137-131-002	202.1.2003.026	Control panel L connect plate	1.3	1
29	B137-404-000	297.9.1911001	Touch button	1.1	1
30	B137-200-000	206.1.2003.012	L track protective plate(S)	1.1	1
31	B137-204-000	206.1.2003.016	L track protective plate(M)	1.1	1
32	B137-198-003	206.1.2003.010	Control panel L outer plate	1.4	1
33	B137-173-001	202.1.2003.068	L track plate(S)	1.2	1
34	B137-202-000	206.1.2003.014	L track cover(M)	1.1	1
35	B137-175-001	202.1.2003.070A	L track plate(M)	1.2	1
36	B137-206-000	206.1.2003.018	L track cover(L)	1.1	1
37	B137-177-003	202.1.2003.072	L front track plate(L)	1.4	1

No.	Part No.	Code No.	Name	Version	Qty
38	B137-208-000	206.1.2003.020	L track protective plate(L)	1.1	1
39	B137-181-000	202.1.2003.076	Block ball plate	1.1	5
40	B137-180-000	202.1.2003.075	Rope back plate	1.1	2
41	B137-135-000	202.1.2003.030	Ball track connect plate(M)	1.1	1

9.4 Decal

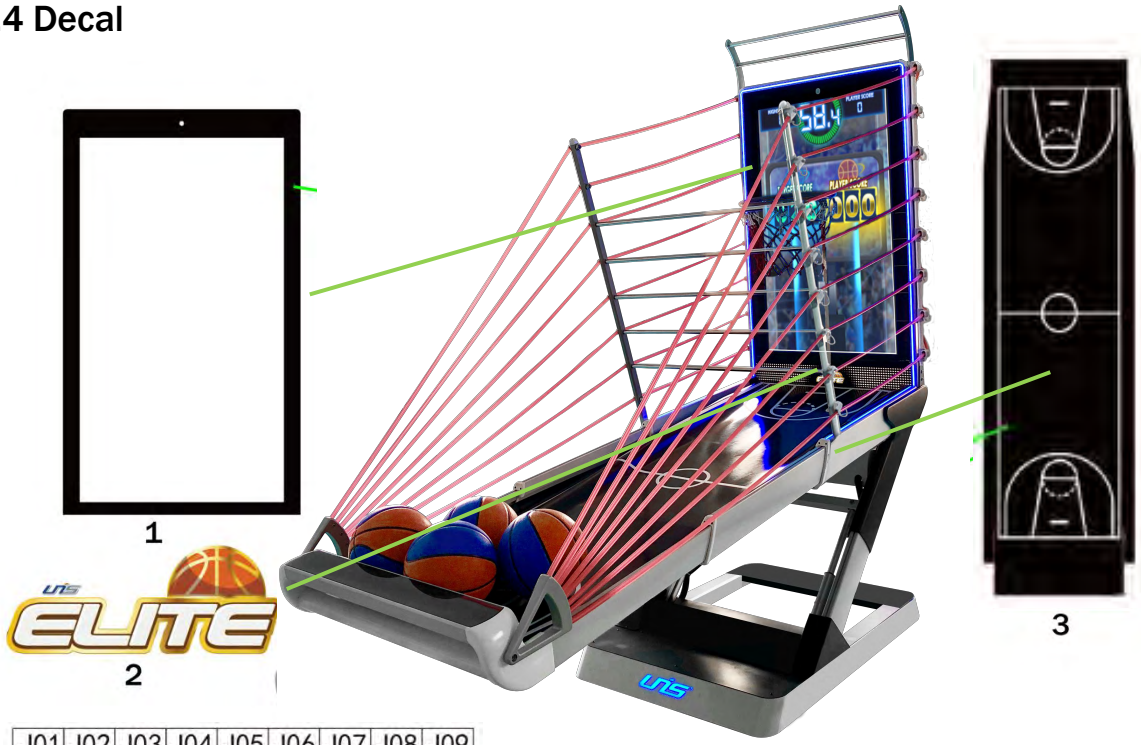

J01	J02	J03	J04	J05	J06	J07	J08	J09
J10	J11	J12	J13	J14	J15	J16	J17	J18
U6-MB. PCB J1	U6-MB. PCB J3	U6-MB. PCB J7	U6-MB. PCB J8	U6-MB. PCB J14	U6-MB. PCB J15	U6-MB. PCB J16	A1. PCB J1	A1. PCB J4
A1. PCB J5	Fuse F1 (5A)	Fuse F2 (5A)	Fuse F3 (5A)	Fuse F4 (5A)	Fuse F7 (5A)	Fuse F8 (5A)	USMB32. PCB UART	J19
J20	J21	J22	U6-MB. PCB J4	USMB32. PCB IR	U6-MB. PCB J6	U6-MB. PCB J9		

4

No.	Part No.	Code No.	Name	Version	Qty
1	B137-712-000	205.1.2003.001	Monitor decal	1.1	1
2	B137-714-001	205.1.2003.003/1	LOGO decal	1.1	1
3	B137-713-000	205.1.2003.002	Ball track plastic	1.1	1
4	B137-719-000	205.1.2003.008	Wiring decal	1.1	1set

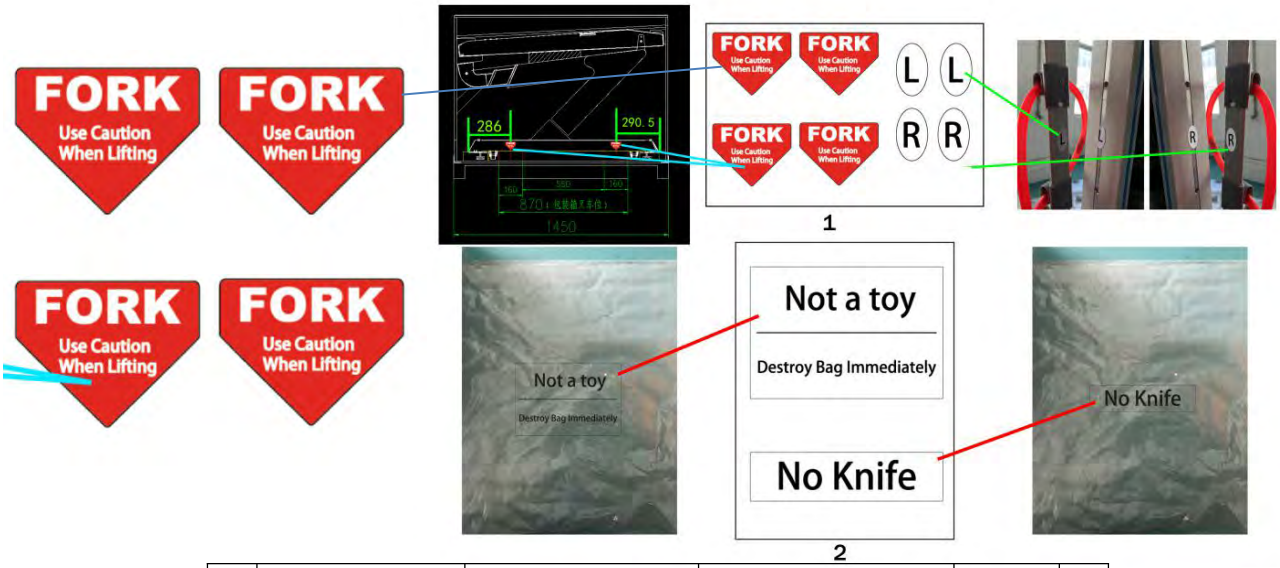

No.	Part No.	Code No.	Name	Version	Qty
1	B137-724-000	205.1.2003.013	Notice decal	1.1	1
2	B137-725-000	205.1.2003.014	Packing bag decal	1.1	1

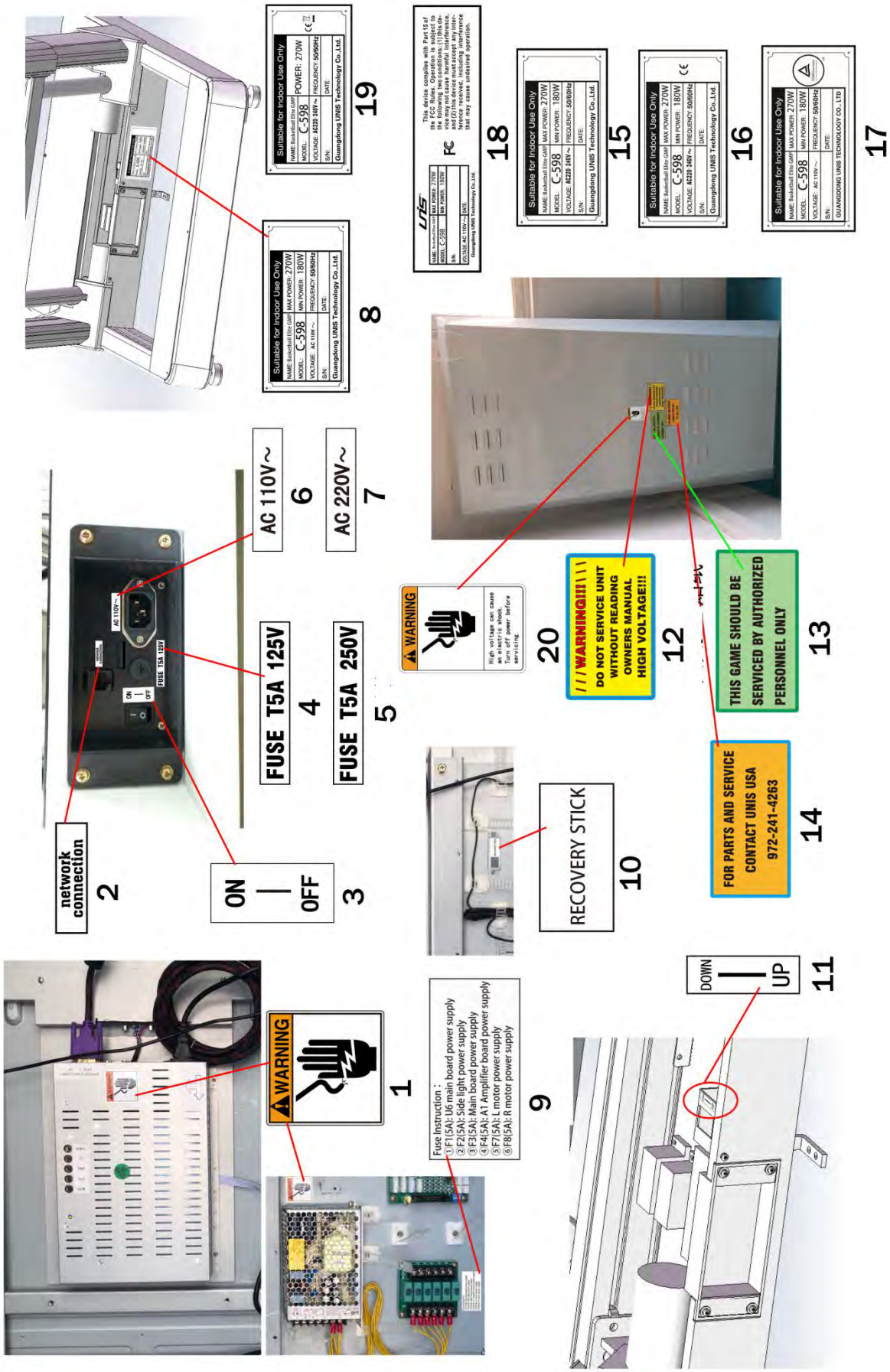
1
WARNING
2
network connection
3
ON
OFF
4
FUSE T5A 125V
5
FUSE T5A 250V
6
AC 110V~
7
AC 220V~
8
Suitable for Indoor Use Only
NAME: Basketball Elite GMP
MAX POWER: 270W
MODEL: C-598
MIN POWER: 180W
VOLTAGE: AC110 ~
FREQUENCY: 50/60Hz
S/N:
DATE:
Guangdong UNIS Technology Co.,Ltd.
9
Fuse Instruction :
① F1(5A): U6 main board power supply
② F2(5A): Side light power supply
③ F3(5A): Main board power supply
④ F4(5A): A1 Amplifier board power supply
⑤ F7(5A): L motor power supply
⑥ F8(5A): R motor power supply
10
RECOVERY STICK
11
DOWN
UP
12
/ / / WARNING!!! \ \ \
DO NOT SERVICE UNIT WITHOUT READING OWNERS MANUAL HIGH VOLTAGE!!!
13
THIS GAME SHOULD BE SERVICED BY AUTHORIZED PERSONNEL ONLY
14
FOR PARTS AND SERVICE CONTACT UNIS USA 972-241-4263
15
Suitable for Indoor Use Only
NAME: Basketball Elite GMP
MAX POWER: 270W
MODEL: C-598
MIN POWER: 180W
VOLTAGE: AC220 240V ~
FREQUENCY: 50/60Hz
S/N:
DATE:
Guangdong UNIS Technology Co.,Ltd.
16
Suitable for Indoor Use Only
NAME: Basketball Elite GMP
MAX POWER: 270W
MODEL: C-598
MIN POWER: 180W
VOLTAGE: AC220 240V ~
FREQUENCY: 50/60Hz
S/N:
DATE:
Guangdong UNIS Technology Co.,Ltd.
17
Suitable for Indoor Use Only
NAME: Basketball Elite GMP
MAX POWER: 270W
MODEL: C-598
MIN POWER: 180W
VOLTAGE: AC 110V ~
FREQUENCY: 50/60Hz
S/N:
DATE:
GUANGDONG UNIS TECHNOLOGY CO., LTD
18
This device complies with Part 15 of the FCC Rules. Operation is subject to the following two conditions: (1) this device may not cause harmful interference, and (2) this device must accept any interference received, including interference that may cause undesired operation.
19
Suitable for Indoor Use Only
NAME: Basketball Elite GMP
MAX POWER: 270W
MODEL: C-598
MIN POWER: 180W
VOLTAGE: AC220 240V ~
FREQUENCY: 50/60Hz
S/N:
DATE:
Guangdong UNIS Technology Co.,Ltd.
20
WARNING
High voltage can cause an electric shock. Turn off power before servicing.

No.	Part No.	Code No.	Name	Version	Qty
1	B137-702-000	2.56.00.000036	High voltage label(s)	1.1	2
2	B137-710-000	2.56.00.000097	Network label	1.1	1
3	B137-701-000	2.56.00.000016	Power supply label	1.1	1
4	B137-708-000	2.56.00.000080	Fuse label(T5A/125V)	1.1	1
5	B137-707-000	2.56.00.000074	Fuse label(T5A/250V)	1.1	1
6	B137-705-000	2.56.00.000071	110V decal	1.1	1
7	B137-706-000	2.56.00.000072	220V decal	1.1	1
8	B137-717-000	205.1.2003.006	110V nameplate	1.1	1
9	B137-720-000	205.1.2003.009	Fuse instruction decal	1.1	1
10	B137-711-000	2.56.00.000116	Recovery stick decal	1.1	1
11	B137-721-000	205.1.2003.010	Rocket switch decal	1.1	1
12	B137-704-000	2.56.00.000067A	Service label(yellow)	1.1	1
13	B137-703-000	2.56.00.000042A	Service label(green)	1.1	1
14	B137-709-000	2.56.00.000095A	Service label(orange)	1.1	1
15	B137-715-000	205.1.2003.004	220V nameplate	1.1	1
16	B137-716-000	205.1.2003.005	220V nameplate(CE)	1.1	1
17	B137-718-000	205.1.2003.007	110V nameplate(FC)	1.1	1
18	B137-722-000	205.1.2003.011	110V nameplate(FCC)	1.1	1
19	B137-723-000	205.1.2003.012	220V nameplate with decal	1.1	1
20	B137-726-000	2.56.00.000037	High voltage label(L)	1.1	1

9.5 Electrical Component

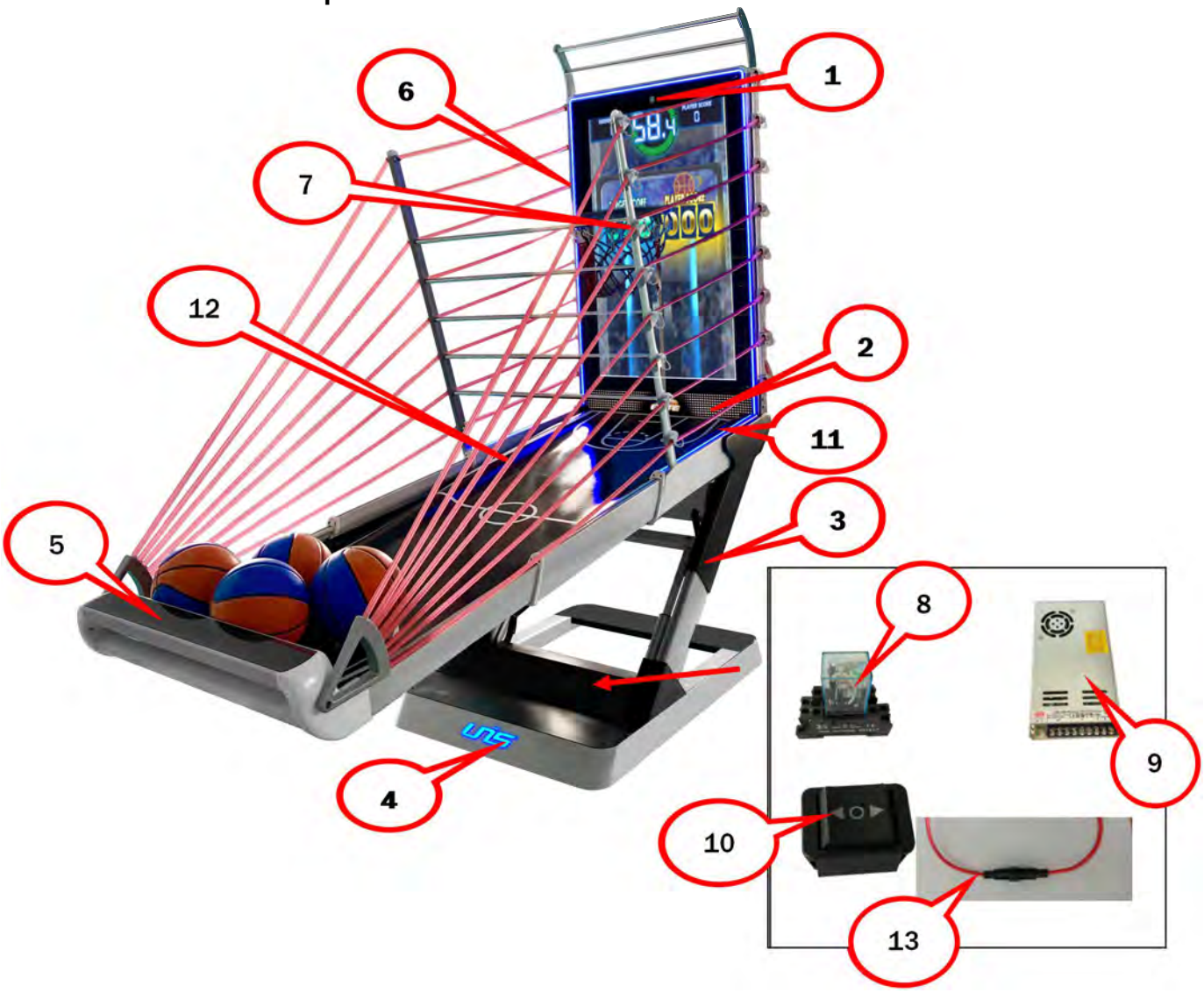

No.	Part No.	Code No.	Name	Version	Qty
1	B137-405-000	2.11.07.040029	Camera	1.1	1
2	B137-417-000	2.28.01.000005	Speaker	1.1	2
	B137-412-000	2.33.05.000010	Audio cable	1.1	1
3	B137-431-000	2.65.03.000286	Chain	1.1	2
4	B137-428-000	2.20.02.015017	BG5050B light strip	1.1	7.87in(200mm)
5	B137-404-000	297.9.1911001	Touch button	1.1	1
6	B137-427-000	2.20.02.018004	Light strip(blue)	1.1	133.85in(3400mm)
7	B137-407-000	2.15.01.000041	Sensor	1.1	2
8	B137-425-000	2.21.4.0000012	Relay holder	1.1	2
	B137-424-000	2.21.4.0000016	Relay	1.1	2
9	B137-408-000	2.16.02.000105	Power supply(24V)	1.1	1
10	B137-426-000	2.26.01.000044	Rocket switch	1.1	1
11	B137-427-000	2.20.02.018004	Light strip(blue)	1.1	30.70in(780mm)
12	B137-427-000	2.20.02.018004	Light strip(blue)	1.1	30.70in(780mm)
13	B137-423-000	2.19.02.000024	Fuse holder	1.1	2

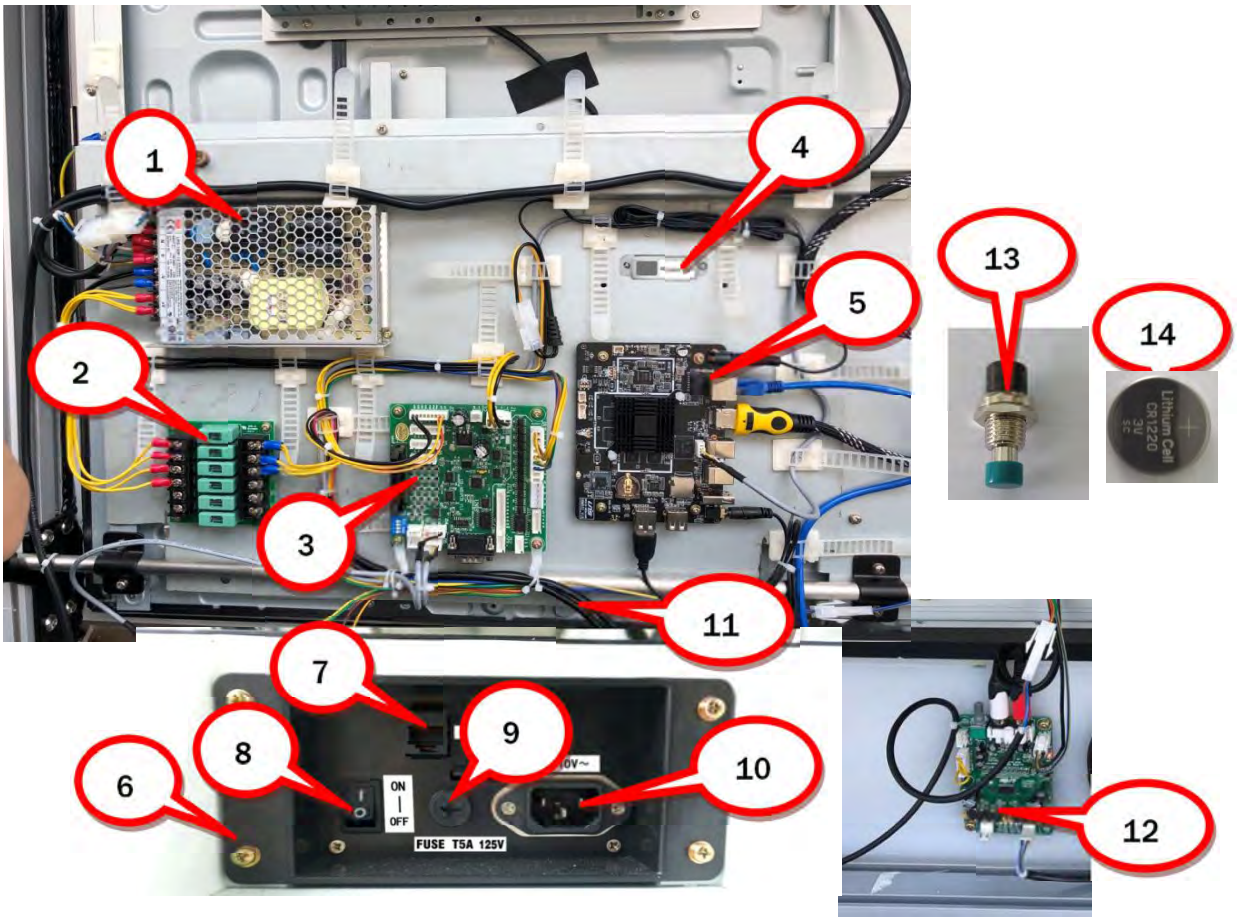

No.	Part No.	Code No.	Name	Version	Qty
1	B137-409-000	2.16.02.000115	Power supply(12V)	1.1	1
2	B137-421-000	2.17.14.000148D	Fuse board(green holder)	1.1	1
3	B137-403-000	297.9.0300007A	U6 mainboard	1.1	1
4	B137-406-000	4.13.00000007	Recovery stick	1.1	1
	B137-102-000	2.60.00064000	Recovery stick plate	1.1	1
5	B137-401-001	297.9.2004001B	Mainboard	1.1	1
6	B137-101-000	2.60.00042000A	Wiring box	1.1	1
7	B137-415-000	2.33.02.000001	Network port	1.1	1
	B137-414-000	2.33.02.000012	Network cable	1.1	1
8	B137-419-000	2.26.01.000005	Rocket switch(s)	1.1	1
9	B137-422-000	2.19.01.000012	Fuse	1.1	1
	B137-418-000	2.19.02.000006	Fuse holder	1.1	1
10	B137-420-000	2.32.01000001A	Filter	1.1	1
	B137-410-000	2.33.01.040051	Power cord	1.1	1
11	B137-411-000	2.33.09.000363	Cable set	1.1	1
12	B137-416-000	297.9.0300009A	Amplifier board	1.1	1
13	B137-449-000	2.24.02.030002	Setting button	1.1	1
14	B137-450-000	2.16.03.000067	Button battery	1.1	1

www.unispartsandservice.com

10. WIRING DIAGRAM

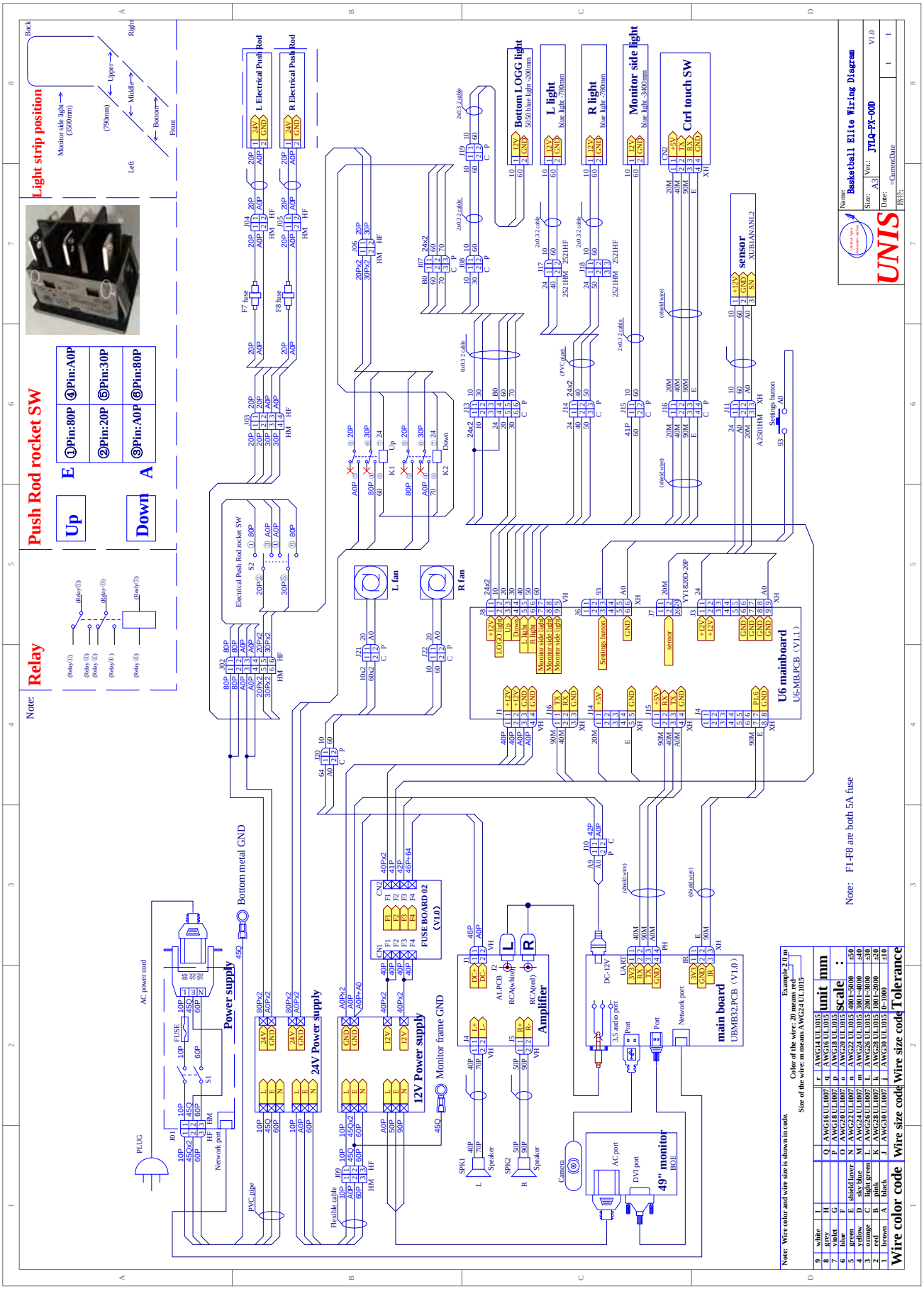

APPENDIX 1

Wi-Fi Antenna Installation Instruction

Before processing the following steps, assure you have the following kits.

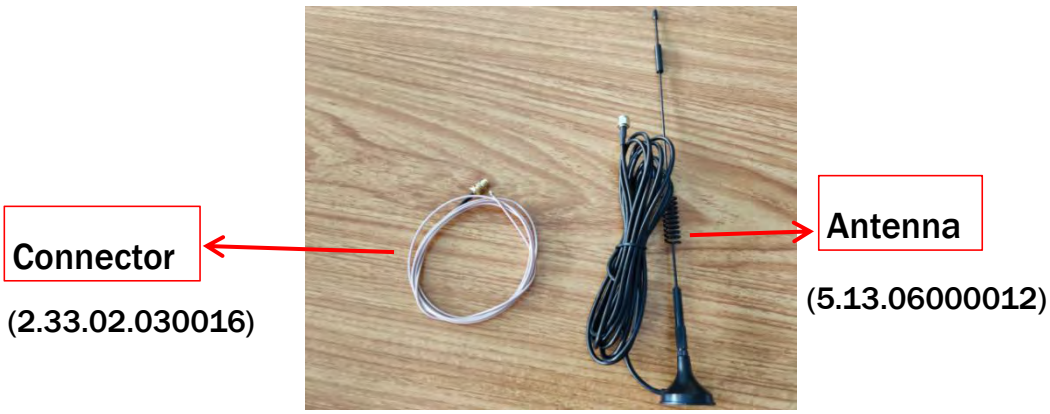

1. Power off the machine. Remove the holder.

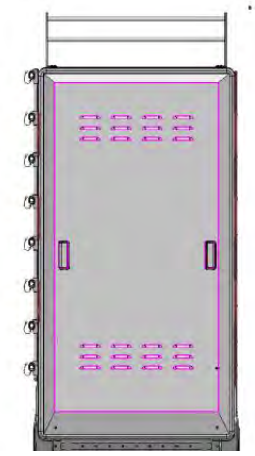

2. Route the Connector to the Monitor back side through the hole. Connect Connector to the Mainboard as shown below.

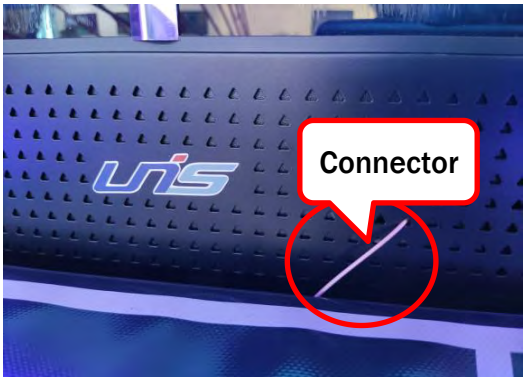

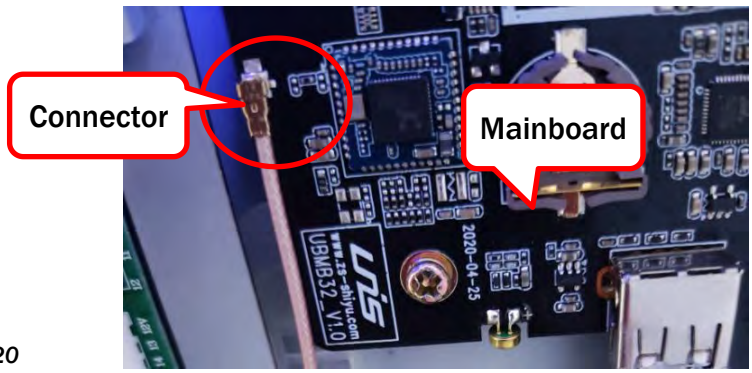

3. Connect Connector to the Antenna. Place Antenna to the Ball track bottom side plate.

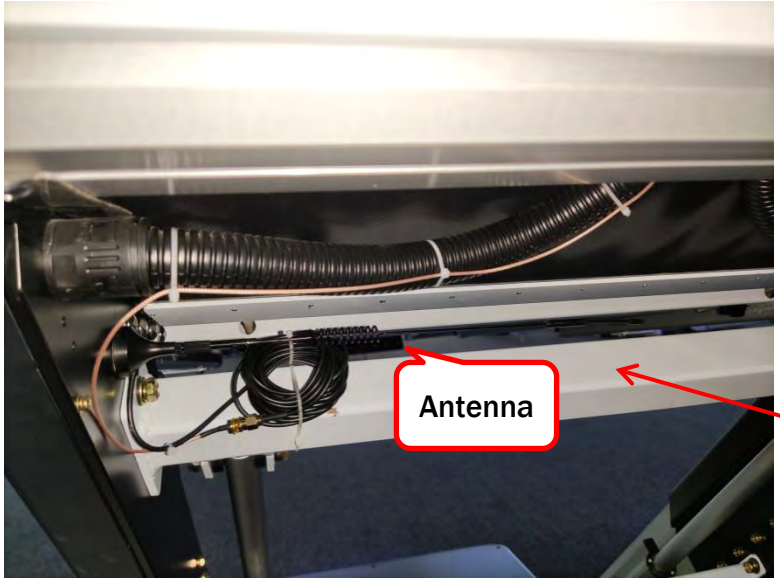

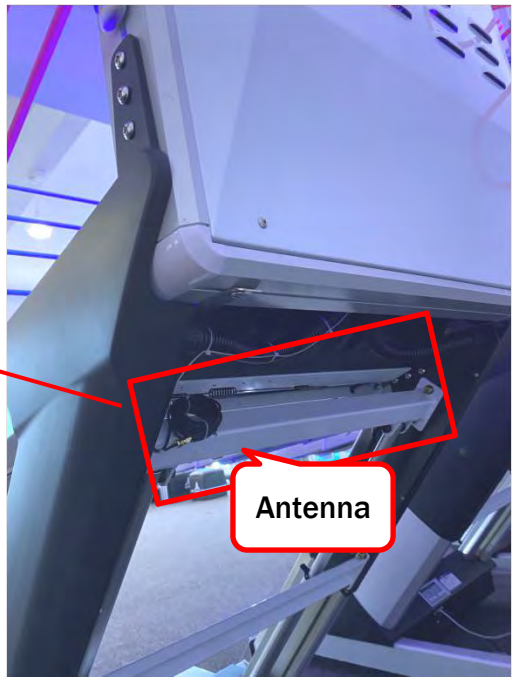

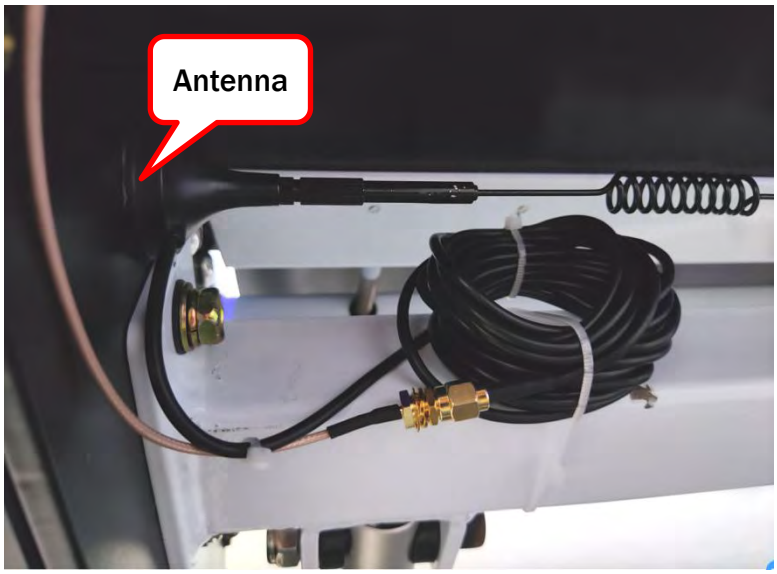

System Update &Recovery Instruction(With New Recovery stick)

Note: This process may take up to 5 minutes.

1. Power off the machine. Remove the holder.

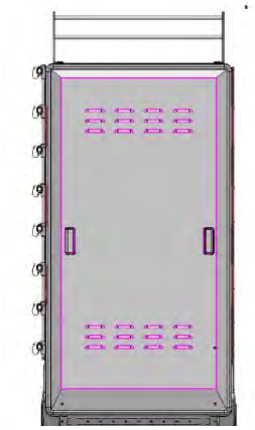

2. Turn machine on. Insert the Recovery stick into the port of the Mainboard.

Note: Don't insert the Recovery stick into Mainboard while is powering on the machine.

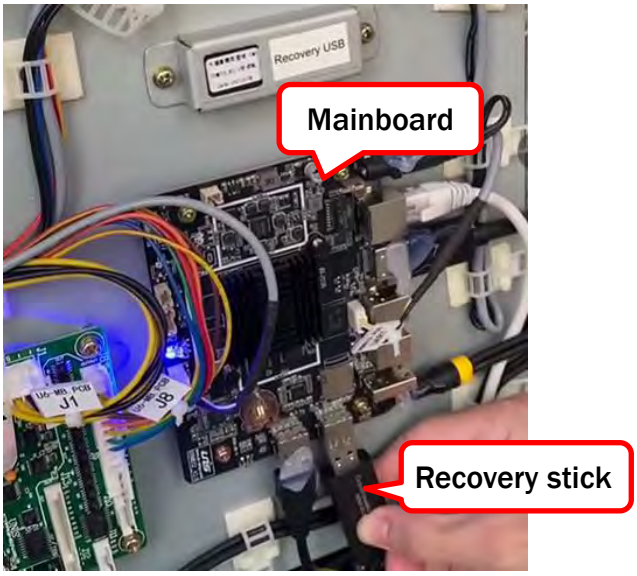

3. The screen is shown as below.

4. The machine will restart automatically and start to update. **(NOTE: Do not disconnect power during this process.)**

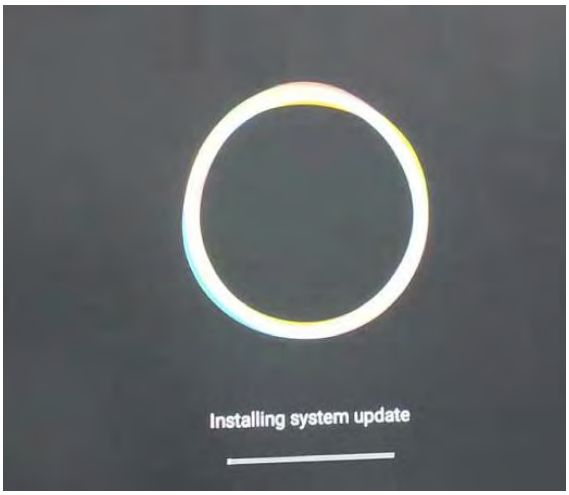

5. Once system update is finished and this screen appear, please restart the machine. Remove the Recovery stick from the Mainboard.

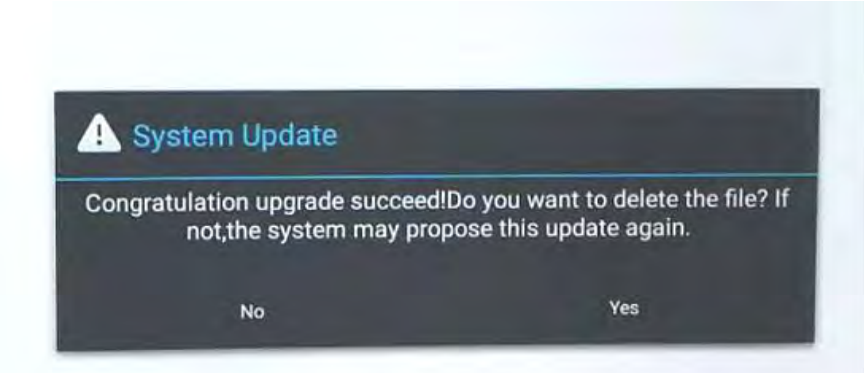

6. After restart the machine, the Game list screen appear. You can select Wi-Fi to connect or select Skip to enter Game list. **(Network linking please refer to 4.5)**

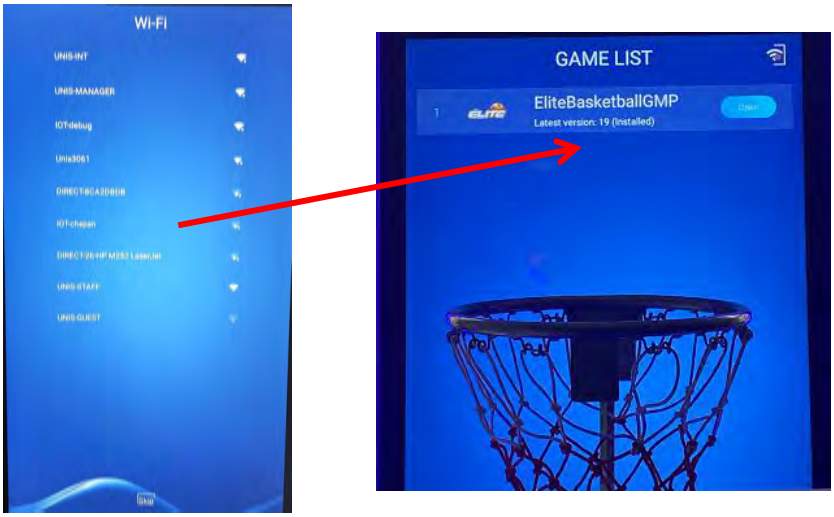

⚠ **WARNING**: The recovery stick should only be used to fix software errors. Using it for other purposes may cause unexpected results and damages.

FCC Warnning:
This equipment has been tested and found to comply with the limits for a Class B digital device, pursuant to part 15 of the FCC Rules. These limits are designed to provide reasonable protection against harmful interference in a residential installation. This equipment generates, uses and can radiate radio frequency energy and, if not installed and used in accordance with the instructions, may cause harmful interference to radio communications. However, there is no guarantee that interference will not occur in a particular installation. If this equipment does cause harmful interference to radio or television reception, which can be determined by turning the equipment off and on, the user is encouraged to try to correct the interference by one or more of the following measures:
• Reorient or relocate the receiving antenna.
• Increase the separation between the equipment and receiver.
• Connect the equipment into an outlet on a circuit different from that to which the receiver is connected.• Consult the dealer or an experienced radio/TV technician for help.

Caution: Any changes or modifications to this device not explicitly approved by manufacturer could void your authority to operate this equipment.

This device complies with part 15 of the FCC Rules. Operation is subject to the following two conditions:
(1)This device may not cause harmful interference, and (2) this device must accept any interference received, including interference that may cause undesired operation.

This equipment complies with FCC radiation exposure limits set forth for an uncontrolled environment. This equipment should be installed and operated with minimum distance 20cm between the radiator and your body.