FCC Part 15C Test Report
FCC ID: 2AQL6-ZNGS09YSB

Applicant:	Xi'an Yisuobao Electronic Technology Co., Ltd.
Address:	Shaanxi Science And Technology Resource Coordination Center, No. 10, Zhangba Fifth Road, Yanta District, Xi 'An, Shaanxi Province
Manufacturer:	Xi'an Yisuobao Electronic Technology Co., Ltd.
Address:	Shaanxi Science And Technology Resource Coordination Center, No. 10, Zhangba Fifth Road, Yanta District, Xi 'An, Shaanxi Province
Product Name:	YEELOCK Smart Drawer & Cabinet Lock Pro
Trade Mark:	N/A
Model Number:	ZNGS09YSB
Date of Receipt:	Jun. 05, 2026
Test Date:	Jun. 05, 2026 - Jun. 18, 2026
Date of Report:	Jun. 18, 2026
Prepared By:	Shenzhen DL Testing Technology Co., Ltd.
Address:	101-201, Comprehensive Building, Tongzhou Electronics Longgang Factory Area, No.1 Baolong Fifth Road, Baolong Community, Baolong Street, Longgang District, Shenzhen, China
Applicable Standards:	FCC PART 15 C 15.247 ANSI C63.10:2020
Test Result:	Pass
Report Number:	DLE-260605043R

Prepared (Test Engineer):	Alisa Song
Reviewer (Supervisor):	Jack Bu
Approved (Manager):	Jade Yang

This test report is based on a single evaluation of one sample of above mentioned products. It is not permitted to be duplicated in extracts without written approval of Shenzhen DL Testing Technology Co., Ltd.

Table of Contents **Page**

1. . SUMMARY OF TEST RESULTS 4
1.1. MEASUREMENT UNCERTAINTY 4
2. . GENERAL INFORMATION 5
2.1. GENERAL DESCRIPTION OF EUT 5
2.2. DESCRIPTION OF TEST MODES 6
2.3. BLOCK DIGRAM SHOWING THE CONFIGURATION OF SYSTEM TESTED 6
2.4. DESCRIPTION OF SUPPORT UNITS(CONDUCTED MODE) 7
2.5. TABLE OF PARAMETERS OF TEST SOFTWARE SETTING 7
2.6. EQUIPMENTS LIST FOR ALL TEST ITEMS 8
3. . EMC EMISSION TEST 9
3.1. CONDUCTED EMISSION MEASUREMENT 9
3.1.1. POWER LINE CONDUCTED EMISSION LIMITS 9
3.1.2. TEST PROCEDURE 9
3.1.3. DEVIATION FROM TEST STANDARD 9
3.1.4. TEST SETUP 10
3.1.5. EUT OPERATING CONDITIONS 10
3.1.6. TEST RESULTS 10
3.2. RADIATED EMISSION MEASUREMENT 11
3.2.1. RADIATED EMISSION LIMITS 11
3.2.2. TEST PROCEDURE 12
3.2.3. DEVIATION FROM TEST STANDARD 12
3.2.4. TEST SETUP 12
3.2.5. EUT OPERATING CONDITIONS 13
3.2.6. TEST RESULTS (BETWEEN 9KHZ – 30 MHZ) 14
3.2.7. TEST RESULTS (BETWEEN 30MHZ – 1GHZ) 15
3.2.8. TEST RESULTS (1GHZ~25GHZ) 17
3.3 RADIATED BAND EMISSION MEASUREMENT 18
3.3.1 TEST REQUIREMENT: 18
3.3.2 TEST PROCEDURE 18
3.3.3 DEVIATION FROM TEST STANDARD 18
3.3.4 TEST SETUP 19
3.3.5 EUT OPERATING CONDITIONS 19
3.4 CONDUCTED BAND EDGE EMISSION&CONDUCTED SPURIOUS EMISSIONS MEASUREMENT 21
3.4.1 APPLICABLE STANDARD 21
3.4.2 TEST PROCEDURE 21
3.4.3 DEVIATION FROM STANDARD 21
3.4.4 TEST SETUP 21

Table of Contents **Page**

3.4.5 EUT OPERATION CONDITIONS 21
3.4.6 TEST RESULTS 21

4. . PEAK OUTPUT POWER 22

4.1. APPLIED PROCEDURES / LIMIT 22
4.1.1. TEST PROCEDURE 22
4.1.2. DEVIATION FROM STANDARD 22
4.1.3. TEST SETUP 22
4.1.4. EUT OPERATION CONDITIONS 22
4.1.5. TEST RESULTS 22

5. . POWER SPECTRAL DENSITY TEST 23

5.1. APPLIED PROCEDURES / LIMIT 23
5.1.1. TEST PROCEDURE 23
5.1.2. DEVIATION FROM STANDARD 23
5.1.3. TEST SETUP 23
5.1.4. EUT OPERATION CONDITIONS 23
5.1.5. TEST RESULTS 23

6. . 6DB BANDWIDTH TEST 24

6.1. APPLIED PROCEDURES / LIMIT 24
6.1.1. TEST PROCEDURE 24
6.1.2. DEVIATION FROM STANDARD 24
6.1.3. TEST SETUP 25
6.1.4. EUT OPERATION CONDITIONS 25
6.1.5. TEST RESULTS 25

7. . ANTENNA REQUIREMENT 26

7.1. STANDARD REQUIREMENT 26

7.2. EUT ANTENNA 26

8. . TEST SEUUP PHOTO 26

9. . EUT PHOTO 26

1.. SUMMARY OF TEST RESULTS

Test procedures according to the technical standards:

FCC Part15 (15.247) , Subpart C			
Standard Section	Test Item	Judgment	Remark
15.207	Conducted Emission	N/A	
15.205, 15.209, 15.247(d)	Radiated Spurious Emission	PASS	
15.209, 15.205	Band Edge Emission	PASS	
15.247(b)	Peak Output Power	PASS	
15.247(a)(2)	6dB Bandwidth	PASS	
15.247(e)	Power Spectral Density	PASS	
15.203	Antenna Requirement	PASS	

NOTE:

(1)" N/A" denotes test is not applicable in this Test Report

Test lab: Shenzhen DL Testing Technology Co., Ltd.

Address: 101-201, Comprehensive Building, Tongzhou Electronics Longgang Factory Area, No.1 Baolong Fifth Road, Baolong Community, Baolong Street, Longgang District, Shenzhen, China

FCC Test Firm Registration Number: 854456
Designation Number: CN1307
IC Registered No.: 27485
CAB ID.: CN0118

1.1. MEASUREMENT UNCERTAINTY

The reported uncertainty of measurement **y** ± **U**, where expended uncertainty **U** is based on a standard uncertainty multiplied by a coverage factor of **k=2**，providing a level of confidence of approximately **95** %。

No.	Item	Uncertainty
1	Conducted Emission Test	±2.56dB
2	RF power,conducted	±0.42dB
3	Spurious emissions,conducted	±2.76dB
4	All emissions,radiated(<1G)	±3.65dB
5	All emissions,radiated(>1G)	±4.89dB
6	Temperature	±0.5°C
7	Humidity	±2%
8	6dB Bandwidth	±0.2MHz
9	Power Spectral Density	±0.3dBm

2.. GENERAL INFORMATION

2.1. GENERAL DESCRIPTION OF EUT

Product Name:	YEELOCK Smart Drawer & Cabinet Lock Pro
Trade Mark:	N/A
Model Number:	ZNGS09YSB
Test Model:	ZNGS09YSB
Model Difference:	N/A
Operation Frequency:	2402~2480MHz
Channel numbers:	40 Channels
Channel separation:	2MHz
Data Rate:	1Mbps
Modulation technology:	GFSK
Antenna Type:	Internal Antenna
Antenna gain:	3.27 dBi
Power supply:	DC 3V from battery

Note:
1.For a more detailed features description, please refer to the manufacturer's specifications or the User's Manual.
2.The EUT's all information provided by client.

2. Channel Lis

Channel List					
Channel	Frequency (MHz)	Channel	Frequency (MHz)	Channel	Frequency (MHz)
00	2402	14	2430	28	2458
01	2404	15	2432	29	2460
02	2406	16	2434	30	2462
03	2408	17	2436	31	2464
04	2410	18	2438	32	2466
05	2412	19	2440	33	2468
06	2414	20	2442	34	2470
07	2416	21	2444	35	2472
08	2418	22	2446	36	2474
09	2420	23	2448	37	2476
10	2422	24	2450	38	2478
11	2424	25	2452	39	2480
12	2426	26	2454		
13	2428	27	2456		

2.2. DESCRIPTION OF TEST MODES

To investigate the maximum EMI emission characteristics generates from EUT, the test system was pre-scanning tested base on the consideration of following EUT operation mode or test configuration mode which possible have effect on EMI emission level. Each of these EUT operation mode(s) or test configuration mode(s) mentioned above was evaluated respectively.

Pretest Mode	Modulation	Channel
Mode 1	GFSK	CH00
Mode 2		CH19
Mode 3		CH39

Note: (1) The measurements are performed at the highest, middle, lowest available channels.
(2) For the two items of conducted disturbance at the power supply end and space radiation below 1GHz, all modes have undergone pre-tests. The report only shows the worst test results of mode 1.

2.3. BLOCK DIGRAM SHOWING THE CONFIGURATION OF SYSTEM TESTED

Radiated Spurious Emission Test

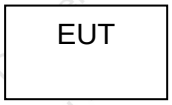

2.4. DESCRIPTION OF SUPPORT UNITS(CONDUCTED MODE)

The EUT has been tested as an independent unit together with other necessary accessories or support units. The following support units or accessories were used to form a representative test configuration during the tests.

Item	Equipment	Model/Type No.	Series No.	Note

Item	Shielded Type	Ferrite Core	Length	Note

Note:

(1) For detachable type I/O cable should be specified the length in cm in『Length』column.

2.5. TABLE OF PARAMETERS OF TEST SOFTWARE SETTING

During testing, channel & power controlling software provided by the customer was used to control the operating channel as well as the output power level. The RF output power selection is for the setting of RF output power expected by the customer and is going to be fixed on the end product.

Test software Version	Test program: FCC TEST V1.0		
Frequency	2402 MHz	2440MHz	2480 MHz
Power Setting of Softwave	10	10	10

2.6. EQUIPMENTS LIST FOR ALL TEST ITEMS

Radiation test, Band-edge test and 6db bandwidth test equipment

Item	Equipment	Manufacturer	Type No.	Serial No.	Last calibration	Calibrated until
1	966 chamber	YIHENG	966 Room	966	Nov. 06, 2023	Nov. 05, 2026
2	Spectrum Analyzer (9kHz-26.5GHz)	Agilent	E4408B	MY50140780	Oct. 25, 2025	Oct. 24, 2026
3	Test Receiver (9kHz-7GHz)	R&S	ESRP7	101393	Oct. 25, 2025	Oct. 24, 2026
4	Bilog Antenna (30MHz-1GHz)	R&S	VULB9162	00306	Oct. 25, 2025	Oct. 24, 2026
5	Horn Antenna (1GHz-18GHz)	Schwarzbeck	BBHA9120D	02139	Oct. 25, 2025	Oct. 24, 2026
6	Horn Antenna (18GHz-40GHz)	A.H. Systems	SAS-574	588	Oct. 25, 2025	Oct. 24, 2026
7	Amplifier (9KHz-6GHz)	Schwarzbeck	BBV9743B	00153	Oct. 25, 2025	Oct. 24, 2026
8	Amplifier (1GHz-18GHz)	EMEC	EM01G8GA	00270	Oct. 25, 2025	Oct. 24, 2026
9	Amplifier (18GHz-40GHz)	Quanjuda	DLE-161	97	Oct. 25, 2025	Oct. 24, 2026
10	Loop Antenna (9KHz-30MHz)	Schwarzbeck	FMZB1519B	00014	Oct. 25, 2025	Oct. 24, 2026
11	RF cables1 (9kHz-1GHz)	ChengYu	966	004	Oct. 25, 2025	Oct. 24, 2026
12	RF cables2 (1GHz-40GHz)	ChengYu	966	003	Oct. 25, 2025	Oct. 24, 2026
13	Antenna connector	Florida RF Labs	N/A	RF 01#	Oct. 25, 2025	Oct. 24, 2026
14	Power probe	KEYSIGHT	U2021XA	MY55210018	Oct. 25, 2025	Oct. 24, 2026
15	Signal Analyzer 9kHz-26.5GHz	Agilent	N9020A	MY55370280	Oct. 25, 2025	Oct. 24, 2026
16	Test Receiver 20kHz-40GHz	R&S	ESU 40	100376	Oct. 25, 2025	Oct. 24, 2026
17	D.C. Power Supply	LongWei	PS-305D	010964729	Oct. 25, 2025	Oct. 24, 2026

Conduction Test equipment

Item	Equipment	Manufacturer	Type No.	Serial No.	Last calibration	Calibrated until
1	843 Shielded Room	ChengYu	843 Room	843	Nov. 05, 2023	Nov. 04, 2026
2	EMI Receiver	R&S	ESR	101421	Oct. 25, 2025	Oct. 24, 2026
3	LISN	R&S	ENV216	102417	Oct. 25, 2025	Oct. 24, 2026
4	843 Cable 1#	ChengYu	CE Cable	001	Oct. 25, 2025	Oct. 24, 2026

Other

Item	Name	Manufacturer	Model	Software version
1	EMC Conduction Test System	FALA	EZ_EMC	EMC-CON 3A1.1
2	EMC radiation test system	FALA	EZ_EMC	FA-03A2
3	RF test system	MAIWEI	MTS8310	2.0.0.0
4	RF communication test system	MAIWEI	MTS8200	2.0.0.0

3.. EMC EMISSION TEST

3.1. CONDUCTED EMISSION MEASUREMENT

3.1.1. POWER LINE CONDUCTED EMISSION Limits (Frequency Range 150KHz-30MHz)

FREQUENCY (MHz)	Limit (dBuV)		Standard
	Quasi-peak	Average	
0.15 -0.5	66 - 56 *	56 - 46 *	FCC
0.50 -5.0	56.00	46.00	FCC
5.0 -30.0	60.00	50.00	FCC

Note:

(1) The tighter limit applies at the band edges.

(2) The limit of " * " marked band means the limitation decreases linearly with the logarithm of the frequency in the range.

The following table is the setting of the receiver

Receiver Parameters	Setting
Attenuation	10 dB
Start Frequency	0.15 MHz
Stop Frequency	30 MHz
IF Bandwidth	9 kHz

3.1.2. TEST PROCEDURE

a. The EUT was placed 0.8 meters from the horizontal ground plane with EUT being connected to the power mains through a line impedance stabilization network (LISN). All other support equipments powered from additional LISN(s). The LISN provide 50 Ohm/ 50uH of coupling impedance for the measuring instrument.

b. Interconnecting cables that hang closer than 40 cm to the ground plane shall be folded back and forth in the center forming a bundle 30 to 40 cm long.

c. I/O cables that are not connected to a peripheral shall be bundled in the center. The end of the cable may be terminated, if required, using the correct terminating impedance. The overall length shall not exceed 1 m.

d. LISN at least 80 cm from nearest part of EUT chassis.

e. For the actual test configuration, please refer to the related Item –EUT Test Photos.

3.1.3. DEVIATION FROM TEST STANDARD

No deviation

3.1.4. TEST SETUP

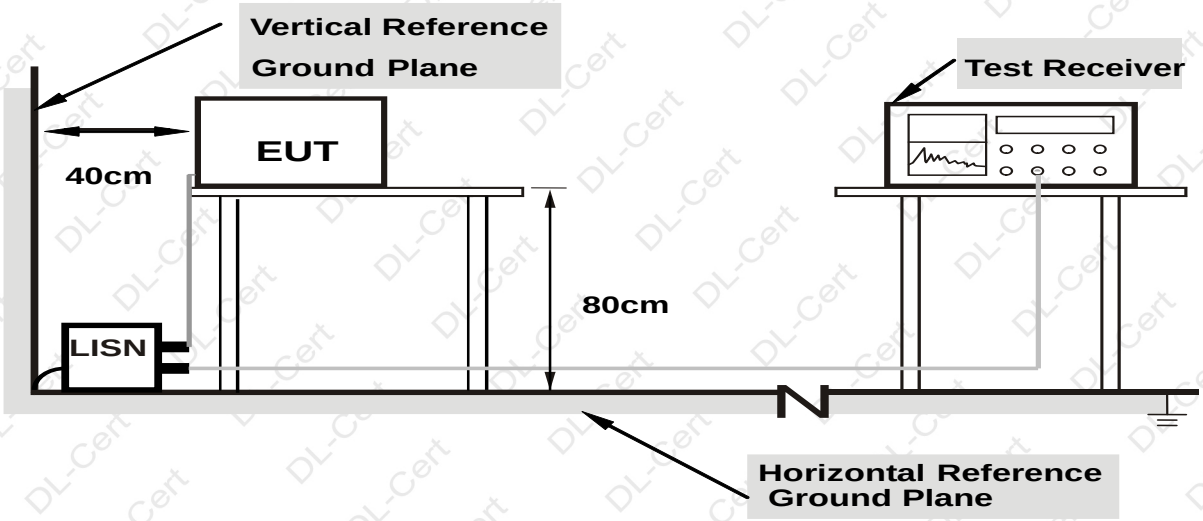

Note: 1.Support units were connected to second LISN.
2.Both of LISNs (AMN) are 80 cm from EUT and at least 80 cm from other units and other metal planes

3.1.5. EUT OPERATING CONDITIONS

The EUT was configured for testing in a typical fashion (as a customer would normally use it). The EUT has been programmed to continuously transmit during test. This operating condition was tested and used to collect the included data.
We pretest AC 120V and AC 230V, the worst voltage was AC 120V and the data recording in the report.

3.1.6. TEST RESULTS

The EUT is powered by DC, no requirements for this item.

3.2. RADIATED EMISSION MEASUREMENT

3.2.1. RADIATED EMISSION LIMITS (Frequency Range 9kHz-1000MHz)

In case the emission fall within the restricted band specified on 15.205(a), then the 15.209(a) limit in the table below has to be followed.

Frequencies (MHz)	Field Strength (micorvolts/meter)	Measurement Distance (meters)
0.009~0.490	2400/F(KHz)	300
0.490~1.705	24000/F(KHz)	30
1.705~30.0	30	30
30~88	100	3
88~216	150	3
216~960	200	3
Above 960	500	3

LIMITS OF RADIATED EMISSION MEASUREMENT (Above 1000MHz)

FREQUENCY (MHz)	Limit (dBuV/m) (at 3M)	
	PEAK	AVERAGE
Above 1000	74	54

Notes:

(1) The limit for radiated test was performed according to FCC PART 15C.

(2) The tighter limit applies at the band edges.

(3) Emission level (dBuV/m)=20log Emission level (uV/m).

Spectrum Parameter	Setting
Attenuation	Auto
Start Frequency	1000 MHz
Stop Frequency	25GHz
RB / VB (emission in restricted band)	1 MHz / 1 MHz for Peak, 1 MHz / 10Hz for Average

Receiver Parameter	Setting
Attenuation	Auto
Start ~ Stop Frequency	9kHz~150kHz / RB 200Hz for QP
Start ~ Stop Frequency	150kHz~30MHz / RB 9kHz for QP
Start ~ Stop Frequency	30MHz~1000MHz / RB 120kHz for QP

3.2.2. TEST PROCEDURE

Below 1GHz test procedure as below:

a. The EUT was placed on the top of a rotating table 0.8 meters above the ground at a 3 meter semi-anechoic camber. The table was rotated 360 degrees to determine the position of the highest radiation.
b. The EUT was set 3 meters away from the interference-receiving antenna, which was mounted on the top of a variable-height antenna tower.
c. The antenna height is varied from one meter to four meters above the ground to determine the maximum value of the field strength. Both horizontal and vertical polarizations of the antenna are set to make the measurement.
d. For each suspected emission, the EUT was arranged to its worst case and then the antenna was tuned to heights from 1 meter to 4 meters (for the test frequency of below 30MHz, the antenna was tuned to heights 1 meter) and the rotatable table was turned from 0 degrees to 360 degrees to find the maximum reading.
e. The test-receiver system was set to Peak Detect Function and Specified Bandwidth with Maximum Hold Mode.
f. If the emission level of the EUT in peak mode was 10dB lower than the limit specified, then testing could be stopped and the peak values of the EUT would be reported. Otherwise the emissions that did not have 10dB margin would be re-tested one by one using peak, quasi-peak or average method as specified and then reported in a data sheet.

Above 1GHz test procedure as below:

g. Different between above is the test site, change from Semi- Anechoic Chamber to fully Anechoic Chamber and change form table 0.8 metre to 1.5 metre.
h. Test the EUT in the lowest channel, the middle channel, the Highest channel

Note:
The horizontal and vertical polarities of the antenna were tested, and a pre-test was conducted on the EUT placement as three orthogonal axes X,Y,Z. The worst display of the test results was the Y-axis. The worst case emissions were reported.

3.2.3. DEVIATION FROM TEST STANDARD

No deviation

3.2.4. TEST SETUP

（A）Radiated Emission Test-Up Frequency Below 30MHz

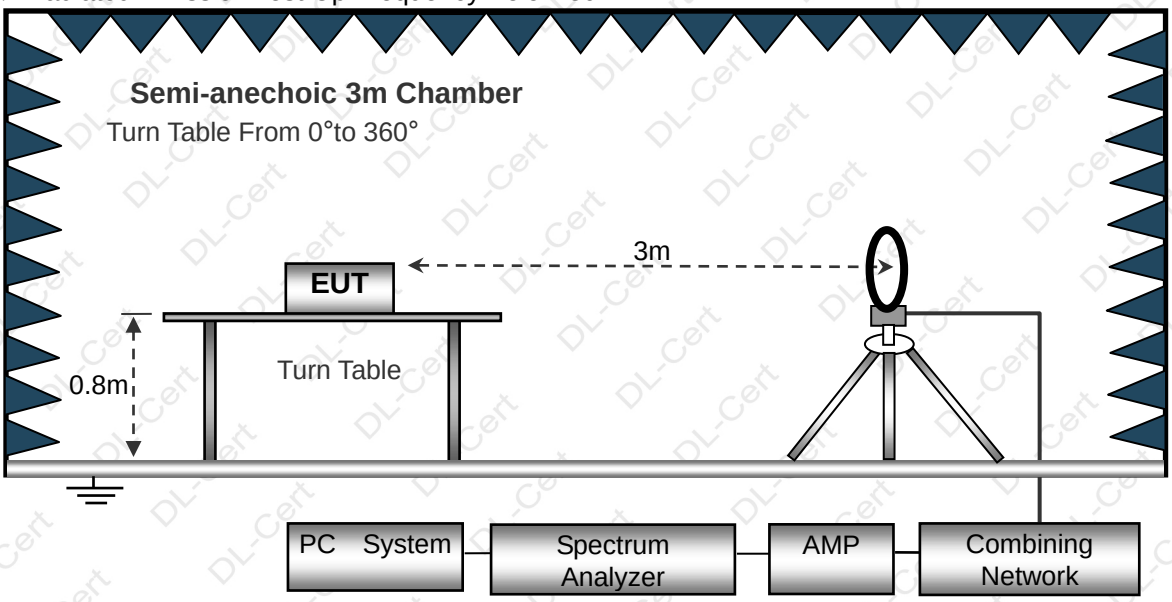

（B）Radiated Emission Test-Up Frequency 30MHz~1GHz

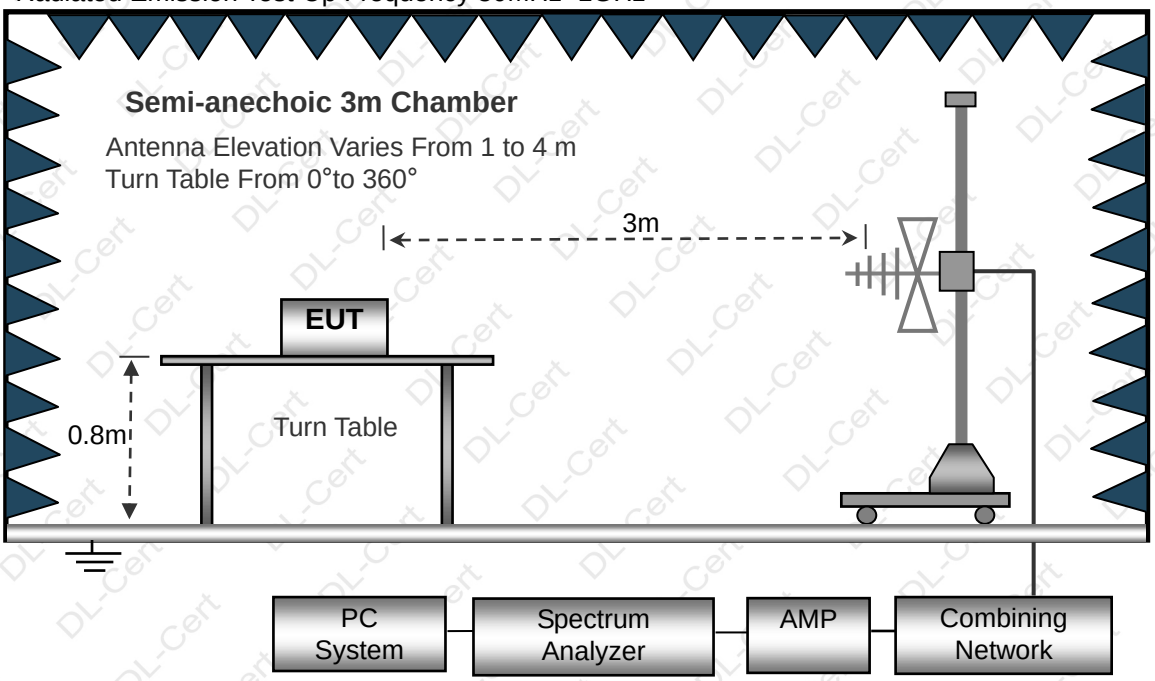

（C）Radiated Emission Test-Up Frequency Above 1GHz

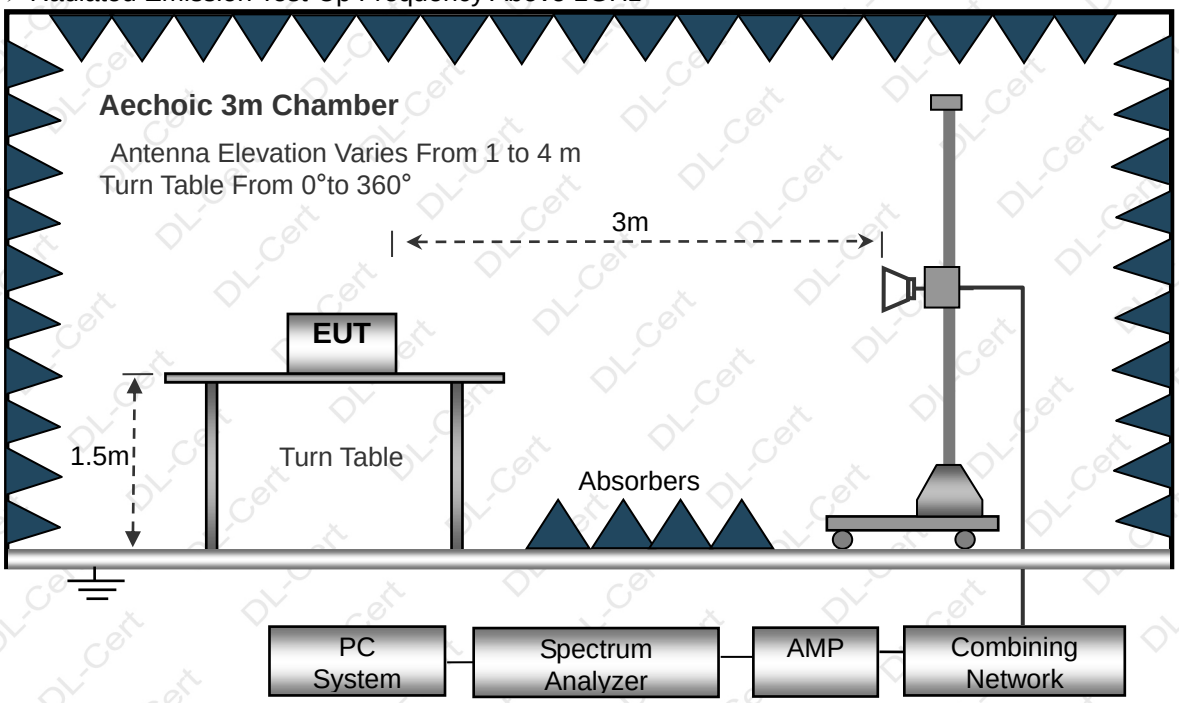

3.2.5. EUT OPERATING CONDITIONS

The EUT tested system was configured as the statements of 2.3 Unless otherwise a special operating condition is specified in the follows during the testing.

3.2.6. TEST RESULTS (BETWEEN 9KHZ – 30 MHZ)

Temperature:	20℃	Relative Humidtity:	48%
Pressure:	1010 hPa	Test Voltage :	DC 3V
Test Mode :	Mode 1	Polarization :	--

Freq.	Reading	Limit	Margin	State
(MHz)	(dBuV/m)	(dBuV/m)	(dB)	P/F
--	--	--	--	PASS
--	--	--	--	PASS

NOTE:

The amplitude of spurious emissions which are attenuated by more than 20dB below the permissible value has no need to be reported.
Distance extrapolation factor =40 log (specific distance/test distance)(dB);
Limit line = specific limits(dBuv) + distance extrapolation factor.

3.2.7. TEST RESULTS (BETWEEN 30MHZ – 1GHZ)

Temperature:	26℃	Relative Humidity:	54%
Pressure:	1010 hPa	Polarization :	Horizontal
Test Voltage :	DC 3V		
Test Mode :	Mode 1		

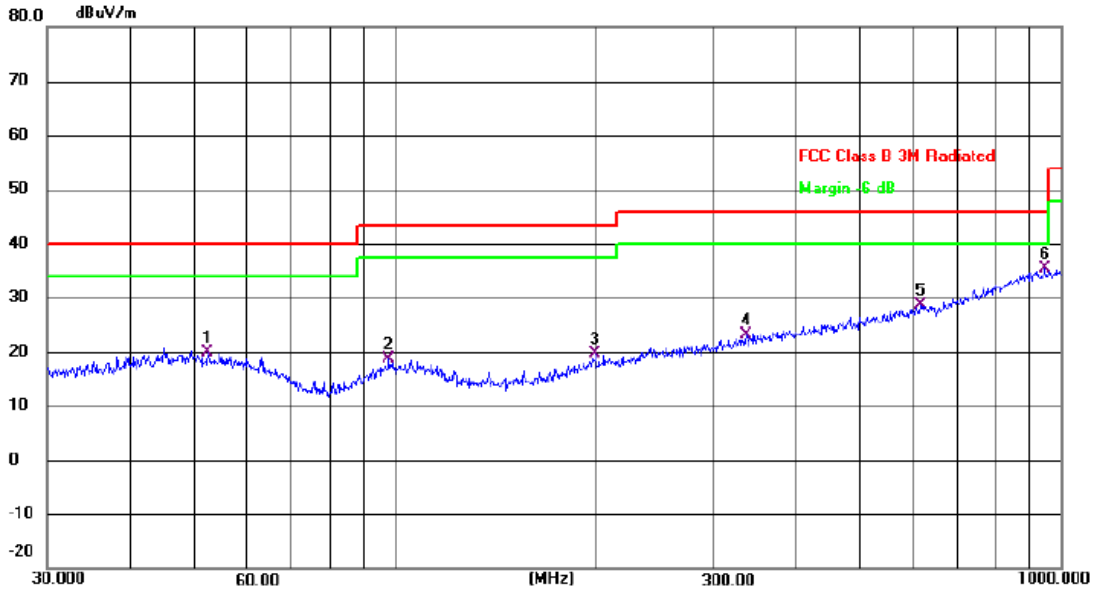

No.	Mk.	Freq.	Reading Level	Correct Factor	Measure-ment	Limit	Margin		
		MHz	dBuV	dB/m	dBuV/m	dBuV/m	dB	Detector	Comment
1		52.2079	27.05	-7.29	19.76	40.00	-20.24	QP	
2		97.7983	28.11	-9.48	18.63	43.50	-24.87	QP	
3		199.9856	28.67	-9.07	19.60	43.50	-23.90	QP	
4		337.2155	27.80	-4.67	23.13	46.00	-22.87	QP	
5		616.3718	28.22	0.38	28.60	46.00	-17.40	QP	
6	*	948.7610	28.80	6.65	35.45	46.00	-10.55	QP	

Remark:
Correct Factor = Cable loss + Antenna factor – Preamplifier;
Level = Reading Level + Correct Factor; Margin = Limit – Level;

Temperature:	26℃	Relative Humidity:	54%
Pressure:	1010 hPa	Polarization :	Vertical
Test Voltage :	DC 3V		
Test Mode :	Mode 1		

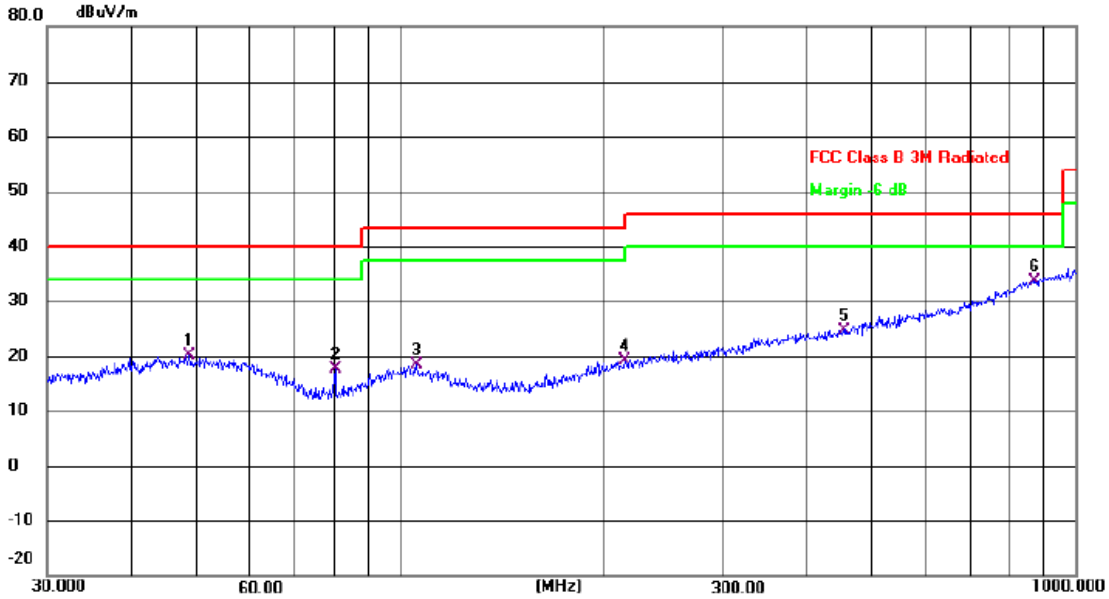

No.	Mk.	Freq.	Reading Level	Correct Factor	Measure-ment	Limit	Margin		
		MHz	dBuV	dB/m	dBuV/m	dBuV/m	dB	Detector	Comment
1		48.6719	27.23	-7.01	20.22	40.00	-19.78	QP	
2		80.0806	30.96	-13.41	17.55	40.00	-22.45	QP	
3		105.6415	27.25	-8.86	18.39	43.50	-25.11	QP	
4		215.2678	27.71	-8.58	19.13	43.50	-24.37	QP	
5		454.3100	27.38	-2.67	24.71	46.00	-21.29	QP	
6	*	872.1832	27.71	5.95	33.66	46.00	-12.34	QP	

Remark:

Correct Factor = Cable loss + Antenna factor – Preamplifier;

Level = Reading Level + Correct Factor; Margin = Limit – Level;

3.2.8. TEST RESULTS (1GHZ~25GHZ)

Polar (H/V)	Frequency (MHz)	Meter Reading (dBuV)	Pre-amplifier (dB)	Cable Loss (dB)	Antenna Factor (dB/m)	Emission Level (dBuV/m)	Limits (dBuV/m)	Margin (dB)	Detector Type
operation frequency:2402									
V	4804.00	57.12	50.65	6.88	31.29	44.64	74	-29.36	PK
V	4804.00	45.28	50.65	6.88	31.29	32.8	54	-21.2	AV
V	7236.00	47.41	49.98	7.16	36.63	41.22	74	-32.78	PK
V	7236.00	36.43	49.98	7.16	36.63	30.24	54	-23.76	AV
V	16087.00	44.18	51.53	11.34	41.52	45.51	74	-28.49	PK
H	4804.00	52.23	50.65	6.88	31.29	39.75	74	-34.25	PK
H	4804.00	41.41	50.65	6.88	31.29	28.93	54	-25.07	AV
H	7236.00	51.69	49.98	7.16	36.63	45.5	74	-28.5	PK
H	7236.00	40.52	49.98	7.16	36.63	34.33	54	-19.67	AV
H	16087.00	45.36	51.53	11.34	41.52	46.69	74	-27.31	PK
operation frequency:2440									
V	4880.00	56.52	50.67	6.89	31.38	44.12	74	-29.88	PK
V	4880.00	44.29	50.67	6.89	31.38	31.89	54	-22.11	AV
V	7311.00	46.25	50.02	7.24	36.63	40.1	74	-33.9	PK
V	7311.00	35.59	50.02	7.24	36.63	29.44	54	-24.56	AV
V	16087.00	43.21	51.53	11.34	41.52	44.54	74	-29.46	PK
H	4880.00	51.74	50.67	6.89	31.38	39.34	74	-34.66	PK
H	4880.00	46.46	50.67	6.89	31.38	34.06	54	-19.94	AV
H	7311.00	54.92	50.02	7.24	36.63	48.77	74	-25.23	PK
H	7311.00	42.84	50.02	7.24	36.63	36.69	54	-17.31	AV
H	16087.00	44.33	51.53	11.34	41.52	45.66	74	-28.34	PK
operation frequency:2480									
V	4960.00	56.23	50.67	6.89	31.38	43.83	74	-30.17	PK
V	4960.00	44.41	50.67	6.89	31.38	32.01	54	-21.99	AV
V	7386.00	45.23	50.02	7.24	36.63	39.08	74	-34.92	PK
V	7386.00	32.57	50.02	7.24	36.63	26.42	54	-27.58	AV
V	16087.00	43.55	51.53	11.34	41.52	44.88	74	-29.12	PK
H	4960.00	54.96	50.67	6.89	31.38	42.56	74	-31.44	PK
H	4960.00	45.41	50.67	6.89	31.38	33.01	54	-20.99	AV
H	7386.00	52.36	50.02	7.24	36.63	46.21	74	-27.79	PK
H	7386.00	41.21	50.02	7.24	36.63	35.06	54	-18.94	AV
H	16087.00	42.36	51.53	11.34	41.52	43.69	74	-30.31	PK

Remark:

1. Emission Level = Meter Reading + Antenna Factor + Cable Loss – Pre-amplifier,
   Margin= Emission Level - Limit
2. If peak below the average limit, the average emission was no test.
3. The amplitude of spurious emissions which are attenuated by more than 20dB below the permissible value has no need to be reported.

3.3 RADIATED BAND EMISSION MEASUREMENT

3.3.1 TEST REQUIREMENT:

FCC Part15 C Section 15.209 and 15.205

LIMITS OF RADIATED EMISSION MEASUREMENT (Above 1000MHz)

FREQUENCY (MHz)	Limit (dBuV/m) (at 3M)	
	PEAK	AVERAGE
Above 1000	74	54

Notes:

(1) The limit for radiated test was performed according to FCC PART 15C.

(2) The tighter limit applies at the band edges.

(3) Emission level (dBuV/m)=20log Emission level (uV/m).

Spectrum Parameter	Setting
Attenuation	Auto
Start Frequency	2300MHz
Stop Frequency	2520
RB / VB (emission in restricted band)	1 MHz / 1 MHz for Peak, 1 MHz / 10Hz for Average

3.3.2 TEST PROCEDURE

Above 1GHz test procedure as below:

a. 1. The EUT was placed on the top of a rotating table 1.5 meters above the ground at a 3 meter camber. The table was rotated 360 degrees to determine the position of the highest radiation.

b. The EUT was set 3 meters away from the interference-receiving antenna, which was mounted on the top of a variable-height antenna tower.

c. The antenna height is varied from one meter to four meters above the ground to determine the maximum value of the field strength. Both horizontal and vertical polarizations of the antenna are set to make the measurement.

d. For each suspected emission, the EUT was arranged to its worst case and then the antenna was tuned to heights from 1 meter to 4 meters and the rota table was turned from 0 degrees to 360 degrees to find the maximum reading.

e. The test-receiver system was set to Peak Detect Function and Specified Bandwidth with Maximum Hold Mode.

f. If the emission level of the EUT in peak mode was 10dB lower than the limit specified, then testing could be stopped and the peak values of the EUT would be reported. Otherwise the emissions that did not have 10dB margin would be re-tested one by one using peak, quasi-peak or average method as specified and then reported in a data sheet.

g. Test the EUT in the lowest channel,the Highest channel

Note:
The horizontal and vertical polarities of the antenna were tested, and a pre-test was conducted on the EUT placement as three orthogonal axes X,Y,Z. The worst display of the test results was the Y-axis. The worst case emissions were reported.

3.3.3 DEVIATION FROM TEST STANDARD

No deviation

3.3.4 TEST SETUP

Radiated Emission Test-Up Frequency Above 1GHz

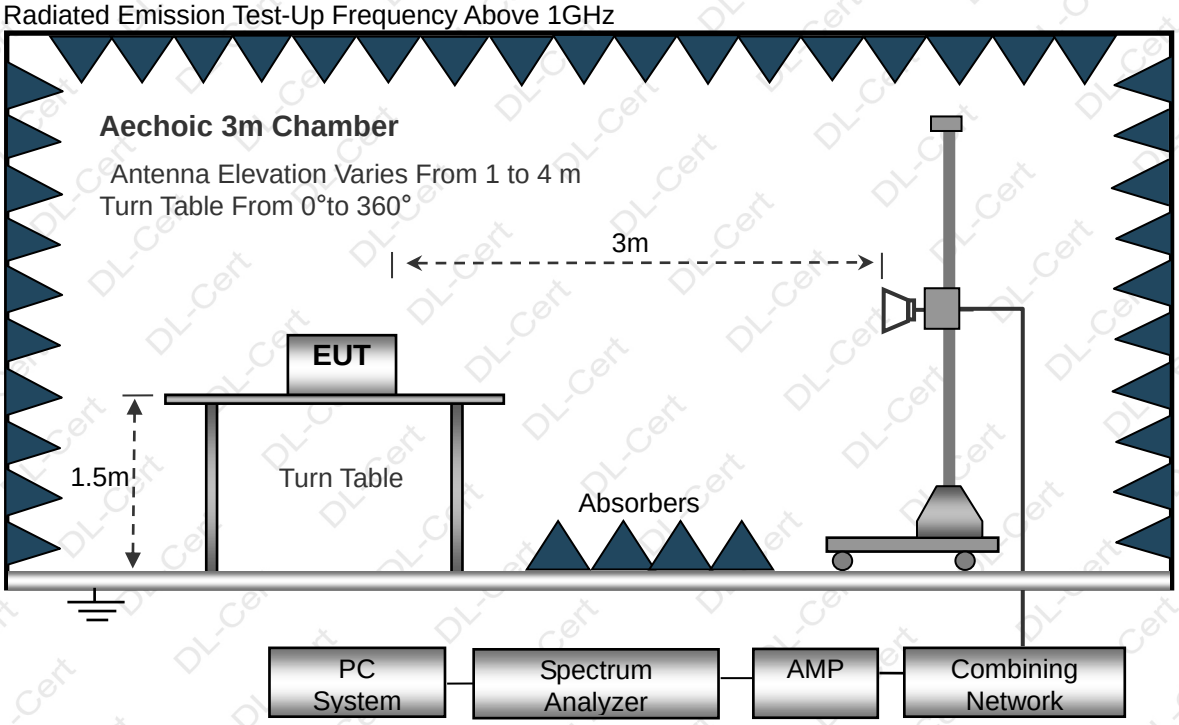

3.3.5 EUT OPERATING CONDITIONS

The EUT tested system was configured as the statements of 2.3 Unless otherwise a special operating condition is specified in the follows during the testing.

3.3.6 TEST RESULT

Polar (H/V)	Frequency (MHz)	Meter Reading (dBuV)	Pre-amplifier (dB)	Cable Loss (dB)	Antenna Factor (dB/m)	Emission Level (dBuV/m)	Limits (dBuV/m)	Margin (dB)	Detector Type
operation frequency:2402									
V	2390.00	62.25	52.11	2.68	27.32	40.14	74	-33.86	PK
V	2390.00	51.46	52.11	2.68	27.32	29.35	54	-24.65	AV
V	2400.00	61.23	52.13	2.52	27.46	39.08	74	-34.92	PK
V	2400.00	49.57	52.13	2.52	27.46	27.42	54	-26.58	AV
H	2390.00	63.52	52.11	2.68	27.32	41.41	74	-32.59	PK
H	2390.00	52.56	52.11	2.68	27.32	30.45	54	-23.55	AV
H	2400.00	62.41	52.13	2.52	27.46	40.26	74	-33.74	PK
H	2400.00	51.36	52.13	2.52	27.46	29.21	54	-24.79	AV

Polar (H/V)	Frequency (MHz)	Meter Reading (dBuV)	Pre-amplifier (dB)	Cable Loss (dB)	Antenna Factor (dB/m)	Emission Level (dBuV/m)	Limits (dBuV/m)	Margin (dB)	Detector Type
operation frequency:2480									
V	2483.50	63.23	52.23	2.86	27.44	41.3	74	-32.7	PK
V	2483.50	52.89	52.23	2.86	27.44	30.96	54	-23.04	AV
V	2500.00	62.52	52.26	2.88	27.49	40.63	74	-33.37	PK
V	2500.00	51.43	52.26	2.88	27.49	29.54	54	-24.46	AV
H	2483.50	62.41	52.23	2.86	27.44	40.48	74	-33.52	PK
H	2483.50	52.26	52.23	2.86	27.44	30.33	54	-23.67	AV
H	2500.00	61.52	52.26	2.88	27.49	39.63	74	-34.37	PK
H	2500.00	50.96	52.26	2.88	27.49	29.07	54	-24.93	AV

Remark:

1. Emission Level = Meter Reading + Factor, Margin= Emission Level - Limit
2. If peak below the average limit, the average emission was no test.
3. The amplitude of spurious emissions which are attenuated by more than 20dB below the permissible value has no need to be reported.

3.4 CONDUCTED BAND EDGE EMISSION&CONDUCTED SPURIOUS EMISSIONS MEASUREMENT

Test Requirement:	FCC Part15 C Section 15.247 (d)
Test Method:	KDB558074 D0115.247 Meas Guidance v05r02

3.4.1 APPLICABLE STANDARD

in any 100 kHz bandwidth outside the frequency bands in which the spread spectrum intentional radiator in operating, the radio frequency power that is produced by the intentional radiator shall be at least 20dB below that in the 100kHz bandwidth within the band that contains the highest level of the desired power, In addition, radiated emissions which fall in the restricted bands, as defined in§15.205(a), must also comply with the radiated emission limits specified in15.209(a).
If the transmitter complies with the conducted power limits based on the use of RMS averaging over a time interval, as permitted under paragraph (b)(3) of this section, the attenuation required under this paragraph shall be 30 dB instead of 20 dB.

3.4.2 TEST PROCEDURE

Using the following spectrum analyzer setting:
Set the RBW = 100KHz.
Set the VBW = 300KHz.
Sweep time = auto couple.
Detector function = Peak.
Trace mode = max hold.
Allow trace to fully stabilize.

3.4.3 DEVIATION FROM STANDARD

No deviation.

3.4.4 TEST SETUP

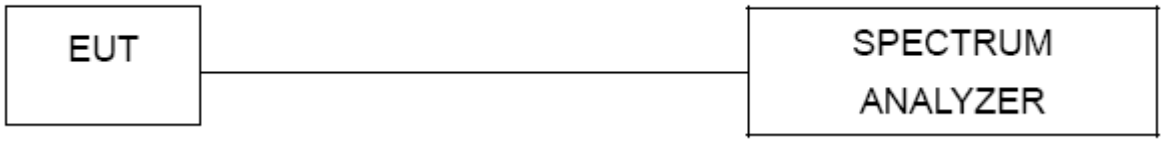

3.4.5 EUT OPERATION CONDITIONS

The EUT tested system was configured as the statements of 2.2 Unless otherwise a special operating condition is specified in the follows during the testing.

3.4.6 TEST RESULTS

Pass, the table and plot please see annex.

4.. PEAK OUTPUT POWER

4.1. APPLIED PROCEDURES / LIMIT

FCC Part15 (15.247) , Subpart C				
Section	Test Item	Limit	Frequency Range (MHz)	Result
15.247 (b)(3)	Peak Output Power	1 watt or 30dBm	2400-2483.5	PASS

4.1.1. TEST PROCEDURE

The testing follows Subclause 11.9.1.1 of ANSI C63.10
The RF output of EUT was connected to the spectrum analyzer by RF cable and attenuator.
The path loss was compensated to the results for each measurement.
Set to the maximum power setting and enable theEUT transmit continuously.
The EUT was operating in controlled its channel.
Use the following spectrum analyzer settings:
Set the RBW ≧DTS bandwidth.
Set VBW=3*RBW.
Set the span ≧3*RBW
Set Sweep time = auto couple.
Set Detector = peak.
Set Trace mode = max hold.
Allow trace to fully stabilize.
Use peak marker function to determine the peak amplitude level.

4.1.2. DEVIATION FROM STANDARD

No deviation.

4.1.3. TEST SETUP

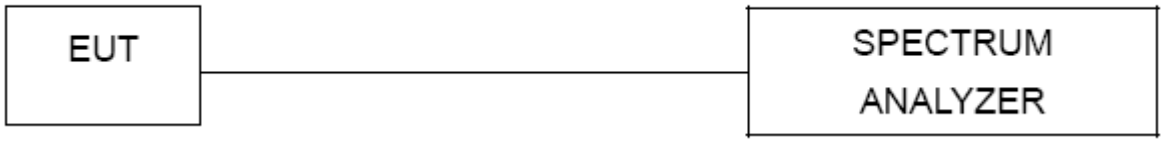

4.1.4. EUT OPERATION CONDITIONS

The EUT tested system was configured as the statements of 2.2 Unless otherwise a special operating condition is specified in the follows during the testing.

4.1.5. TEST RESULTS

Pass, the table and plot please see annex.

5.. POWER SPECTRAL DENSITY TEST

5.1. APPLIED PROCEDURES / LIMIT

FCC Part15 (15.247) , Subpart C				
Section	Test Item	Limit	Frequency Range (MHz)	Result
15.247	Power Spectral Density	8 dBm (in any 3KHz)	2400-2483.5	PASS

Spectrum Parameters	Setting
Attenuation	Auto
Span Frequency	= the frequency band of operation
RB	RBW ≥ 3kHz
VB	VBW ≥ 3RBW
Detector	Peak
Trace	Max Hold
Sweep Time	Auto

5.1.1. TEST PROCEDURE

a. The EUT was directly connected to the spectrum analyzer and antenna output port as show in the block diagram below,

5.1.2. DEVIATION FROM STANDARD

No deviation.

5.1.3. TEST SETUP

5.1.4. EUT OPERATION CONDITIONS

The EUT tested system was configured as the statements of 2.2 Unless otherwise a special operating condition is specified in the follows during the testing.

5.1.5. TEST RESULTS

Pass, the table and plot please see annex.

6.. 6DB BANDWIDTH TEST

6.1. APPLIED PROCEDURES / LIMIT

FCC Part15 (15.247) , Subpart C				
Section	Test Item	Limit	Frequency Range(MHz)	Result
15.247(a)(2)	Bandwidth	>= 500KHz (6dB bandwidth)	2400-2483.5	PASS

6.1.1. TEST PROCEDURE

6dB bandwidth test procedure

1. Set RBW = shall be in the range of 1% to 5% of the OBW but not less than 100 kHz.
2. Set the video bandwidth (VBW) ≥[3 × RBW].
3. Detector = Peak.
4. Trace mode = max hold.
5. Sweep = auto couple.
6. Allow the trace to stabilize.
7. Measure the maximum width of the emission that is constrained by the frequencies associated with the two outermost amplitude points (upper and lower frequencies) that are attenuated by 6 dB relative to the maximum level measured in the fundamental emission.

99% OBW test procedure

1. Set RBW = 1% to 5% of the OBW.
2. Set the video bandwidth (VBW) Approximately three times the RBW.
3. Detector = Peak.
4. Trace mode = max hold.
5. Sweep = auto couple.
6. Allow the trace to stabilize.
7. If the instrument does not have a 99% power bandwidth function, then the trace data points arerecovered and directly summed in linear power terms. The recovered amplitude data points,beginning at the lowest frequency, are placed in a running sum until 0.5% of the total is reached;that frequency is recorded as the lower frequency. The process is repeated until 99.5% of the totalis reached; that frequency is recorded as the upper frequency. The 99% power bandwidth is thedifference between these two frequencies.

6.1.2. DEVIATION FROM STANDARD

No deviation.

6.1.3. TEST SETUP

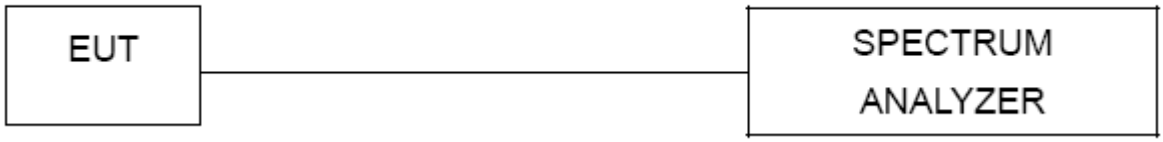

6.1.4. EUT OPERATION CONDITIONS

The EUT tested system was configured as the statements of 2.2 Unless otherwise a special operating condition is specified in the follows during the testing.

6.1.5. TEST RESULTS

Pass, the table and plot please see annex.

7.. ANTENNA REQUIREMENT

7.1. STANDARD REQUIREMENT

15.203 requirement: For intentional device, according to 15.203: an intentional radiator shall be designed to ensure that no antenna other than that furnished by the responsible party shall be used with the device.

7.2. EUT ANTENNA

The EUT antenna is Internal Antenna, It comply with the standard requirement.

8.. TEST SEUUP PHOTO

Reference to the appendix I for details.

9.. EUT PHOTO

Reference to the appendix II for details.

※※※※※ **END OF REPORT** ※※※※※