ULTRASONIC DIFFUSER BLUETOOTH 360ml

Contents:
Ultrasonic Diffuser
Power Adapter
Remote Control
3 Essential Oil Bottles

Basic Setup:
1. Plug the power cord into the power port on the bottom of the diffuser.
2. Fill the tank with room temperature water. Do not fill past the maximum fill line. Distilled water is recommended.
3. Add 4-5 drops of essential oils. Add more drops for a stronger scent.
4. Put diffuser lid in place.
5. Place diffuser in desired location. Do not place anything on diffuser or place diffuser under anything.
6. Plug adapter into power source, making sure that cable is not a tripping hazard.
7. Press power button on the underside or use the remote (see "Remote Control" on the following page).
8. Place decorative cover on diffuser.
   - When the diffuser is turned on, colorful LEDs will cycle through a spectrum of colors.
   - Diffuser will automatically shut off when water level gets too low.
   - After auto shut off, the lights and music can be turned back on without refilling tank.
   - Remember to remove the power cord when not in use.

Timer:
After the diffuser is turned on, pressing the power button will activate one of the timer modes. Select 1, 3, or 6 hours.

Remote Control Batteries:
The remote uses a CR2025 button cell battery (included). To replace this battery when it is exhausted, follow these steps.
1. Slide out battery tray.
2. Remove old battery and replace with new battery. Be certain that the battery is positioned so that the smooth side (+) is towards the back of the remote.
3. Close battery tray and secure.

Functions
Use the remote to control the diffuser's advanced features.

Mist – When the power button is turned on, the mist is continuous. Press the mist button once to engage intermittent mode, press again to turn mist off.

Light – Turns on the light. The color will slowly shift in a soothing pattern. A second press will freeze the color at its current hue. Additional presses will cycle through a range of colors that will not change. The pale color after red is the shifting color mode. Hold for 3 seconds to turn this feature off.

Brightness – Progressively dims the light. The third push will restore full brightness.

Power – Turns the diffuser on or off.

Audio – Choice of two soothing tunes or two sets of nature sounds. Cycle through the options by pushing this button. Hold for 3 seconds to turn this feature off.

Increase/Decrease Volume – Adjusts sound level.

Timer – Set the diffuser to shut off after 1, 3 or 6 hours. An indicator light, visible when the ceramic shell is removed, will indicate which mode is selected.

Note: The diffuser will shut down if the water is depleted before the timer expires.

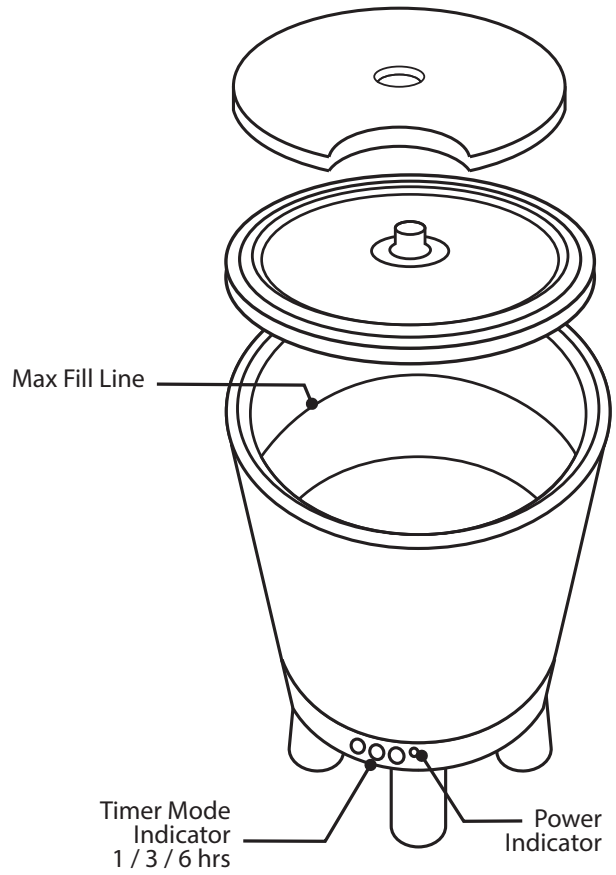

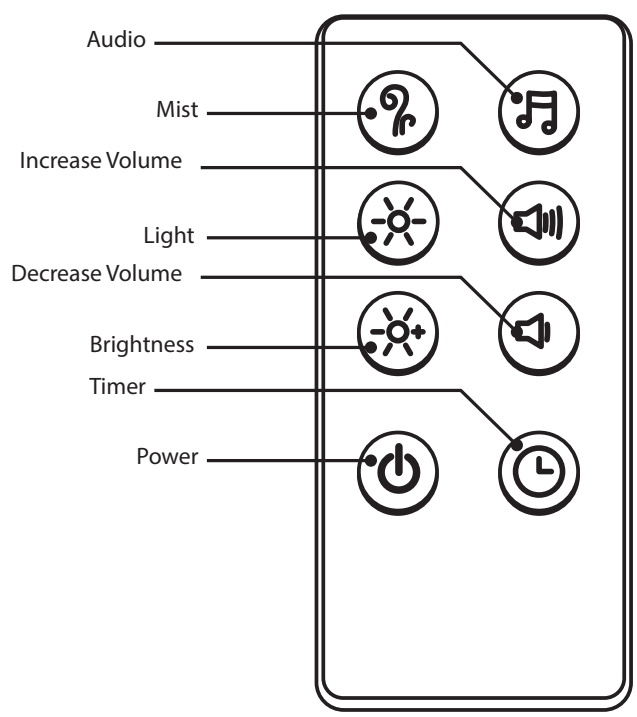

Printed in China

ULTRASONIC DIFFUSER BLUETOOTH 360ml

Bluetooth® Speaker
The Bluetooth® function is not controlled by the Remote Control.
1. Make sure Bluetooth® is enabled on your device.
2. Push the Bluetooth® button on the underside of the Diffuser. The Diffuser will announce that it is ready.
3. On your device, search for Bluetooth® devices and select "Sound Diffuser". TheDiffuser will announce that it is paired.
4. Control volume and content with your device.

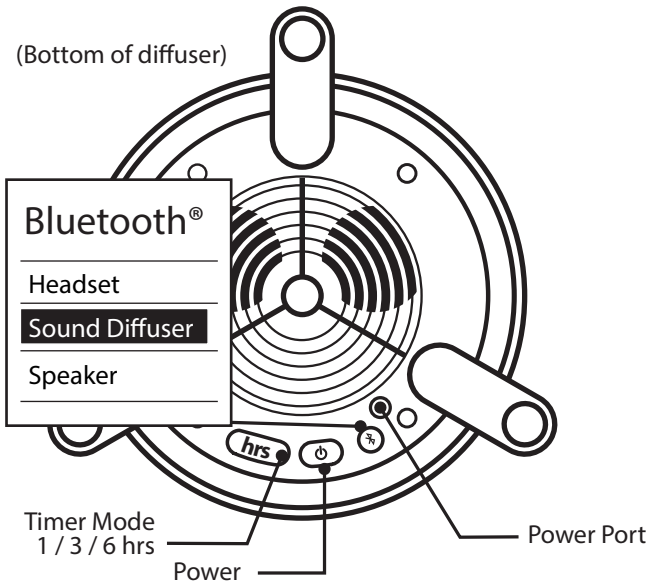

Care:
- Do not empty the water tank by pouring water through the air vent. Remove the top and pour out the contents normally.
- Distilled water is recommended to avoid mineral build up.
- Use only water for cleaning, or a cotton swab moistened with alcohol to remove traces of aromatic essential oils. DO NOT immerse in water.
- Any remaining water in the diffuser tank should be poured out if diffuser will not be used for an extended period of time. Allow to air dry before reassembling.

Cleaning:
The diffuser should be cleaned on a regular basis to avoid mineral build up or algae growth.
1. Disconnect power cord from diffuser
2. Use only water for cleaning. DO NOT immerse in water.
3. Dry with a soft cloth or allow to air dry.

Button cell battery warning:
This product contains a Button or Coin Cell Battery. A swallowed Button or Coin Cell Battery can cause internal chemical burns in as little as two hours and lead to death. Dispose of used batteries immediately. Keep new and used batteries away from children. If you think batteries might have been swallowed or placed inside any part of the body, seek immediate medical attention
- Keep remote control out or reach of children
- Do not short-circuit the battery supply terminals.
- Do not dispose of batteries in fire, batteries may explode or leak.
- Recycle or dispose of batteries according to federal, state, and local laws.

To avoid the risk of electric shock or fire:
- Do not subject this product to impact or drop it.
- Disconnect from power source before carrying or storing product.
- Allow product to thoroughly dry before storing.
- Disconnect from power before cleaning this product.
- Do not insert any objects into the diffuser vent.
- Do not touch plug with wet hands or allow water to contact plug.
- Do not immerse in water or use in a damp area such as a bathroom.

SAFETY WARNINGS: PLEASE READ BEFORE USE
- Not a children's item. Keep out of the reach of children.
- Essential Oils Can be harmful or fatal if swallowed. Do not ingest. Can cause allergic reactions – read labels on bottles carefully.
- Thoroughly inspect products before every use. If the product appears worn, frayed/splintered, cracked, or broken in any manner, discontinue use and discard immediately.
- Read all directions before using this product and do not allow others to use it unless they understand these instructions.
- Operate only on a level, stable surface.
- Only use the included power cable for operation.
- Do not attempt to use this product for other purposes.
- Do not place in an area where items may be damaged by mist, including furniture and clothing.

SPECIFICATIONS:

Diffuser Operating Time:	18 Hours Continuous, 36 Hours Intermittent
Diffuser Capacity:	360ml / 1.5 cup / 12 oz.
Color Sequence:	Color Changing > Pink > Magenta > Light Purple > Dark Purple > Light Blue > Dark Blue > Light Green > Dark Green > Red
Soothing Sounds:	Tranquil > Ocean > Peace > Rainforest > Meditate > Calm > Relax > Ambience
Power Supply:	24V, 750mA

©2018 MerchSource, LLC and all associated logos are trademarks of MerchSource, LLC. All rights reserved.

For technical support, please call 1-800-374-2744

Due to continuous product improvements, the pictures on this manual may differ slightly from the actual product.

KEEP THIS INSTRUCTION MANUAL AS IT CONTAINS IMPORTANT INFORMATION FOR FUTURE REFERENCE.

FCC WARNING
This device complies with Part 15 of the FCC Rules. Operation is subject to the following two conditions: (1) this device may not cause harmful interference, and (2) this device must accept any interference received, including interference that may cause undesired operation.
Warning: Changes or modifications to this unit not expressly approved by the party responsible for compliance could void the user's authority to operate the equipment.
NOTE: This equipment has been tested and found to comply with the limits for a Class B digital device, pursuant to Part 15 of the FCC Rules. These limits are designed to provide reasonable protection against harmful interference in a residential installation. This equipment generates, uses and can radiate radio frequency energy and, if not installed and used in accordance with the instructions, may cause harmful interference to radio communications. However, there is no guarantee that interference will not occur in a particular installation. If this equipment does cause harmful interference to radio or television reception, which can be determined by turning the equipment off and on, the user is encouraged to try to correct the interference by one or more of the following measures:
- Reorient or relocate the receiving antenna.
- Increase the separation between the equipment and receiver.
- Connect the equipment into an outlet on a circuit different from that to which the receiver is connected.
- Consult the dealer or an experienced radio / TV technician for help.