EXPLORE®
SCIENTIFIC

5-in-1 Wi-Fi
Professional Wearther Station
Art. NO.: WSX1001

ABOUT THIS USER'S MANUAL

⚠ This symbol represents a warning. To ensure safe use, always adhere to the instructions described in this documentation.

This symbol is followed by a user's tip.

PRECAUTIONS

- Keep and reading the "User manual" is highly recommended. The manufacturer and supplier cannot accept any responsibility for any incorrect readings, export data lost and any consequences that occur should an inaccurate reading take place.
- This product is designed for use in the home only as indication of weather conditions. This product is not to be used for medical purposes or for public information
- Do not subject the unit to excessive force, shock, dust, temperature or humidity.
- Do not cover the ventilation holes with any items such as newspapers, curtains etc.
- Do not immerse the unit in water. If you spill liquid over it, dry it immediately with a soft, lint-free cloth.
- Do not clean the unit with abrasive or corrosive materials.
- Do not tamper with the unit's internal components. This invalidates the warranty.
- Placement of this product on certain types of wood may result in damage to its finishing for which manufacturer will not be responsible. Consult the furniture manufacturer's care instructions for information.
- Only use fresh batteries. Do not mix new and old batteries.
- Only use attachments / accessories specified by the manufacturer.
- Images shown in this manual may differ from the actual display.
- When disposing of this product, ensure it is collected separately for special treatment.
- Dispose of used batteries according to the instructions.
- CAUTION! risk of explosion if battery is replaced by an incorrect type.
- The socket-outlet shall be installed near the equipment and easily be accessible.
- The contents of this manual may not be reproduced without the permission of the manufacturer.
- Technical specifications and user manual contents for this product are subject to change without notice.
- When replacement parts are required, be sure the service technician uses replacement parts specified by the manufacturer that have the same characteristics as the original parts. Unauthorized substitutions may result in fire, electric shock, or other hazards.
- This product is not a toy. Keep out of the reach of children.
- Place the console at least 20cm from nearby persons.
- The console shall be used with the adaptor according to product specification.
- This device is only suitable for mounting at height < 2m.
- These products are intended to be used only indoors.

TABLE OF CONTENTS

INTRODUCTION . . . 1

OVERVIEW . . . 1
- CONSOLE . . . 1
- LCD DISPLAY . . . 2
- WIRELESS 5-IN-1 WEATHER SENSOR . . . 2

INSTALLATION AND SETUP . . . 3
- INSTALL WIRELESS 5-IN-1 WEATHER SENSOR . . . 3
- POWER UP CONSOLE . . . 5
- PAIRING WIRELESS 5-IN-1 WEATHER SENSOR & CONSOLE . . . 6
- PAIRING ADDITIONAL WIRELESS SENSOR(S) & CONSOLE (OPTIONAL) . . . 6

CREATE WEATHER SERVER ACCOUNT & SETUP WI-FI CONNECTION . . . 6
- CREATE WEATHER UNDERGROUND ACCOUNT . . . 6
- CREATE WEATHERCLOUD ACCOUNT . . . 8
- SETUP WI-FI CONNECTION . . . 9
- SETUP THE WEATHER SERVER CONNECTION . . . 11
- ADVANCE SETTING IN WEB INTERFACE . . . 12
- VIEW YOUR WEATHER DATA IN WUNDERGROUND . . . 13
- VIEW YOUR WEATHER DATA IN WEATHERCLOUD . . . 13
- FIRMWARE UPDATE . . . 14

OTHER SETTING & FUNCTIONS OF THE CONSOLE . . . 15
- MANUAL CLOCK SETTING . . . 15
- MOON PHASE . . . 15
- POINTING THE WIRELESS 5-IN-1 SENSOR TO SOUTH . . . 15
- SETTING ALARM TIME . . . 16
- ACTIVATING ALARM AND TEMPERATURE PRE-ALARM FUNCTION . . . 16
- TEMPERATURE / HUMIDITY FUNCTION & TREND . . . 16
- COMFORT INDICATION . . . 17
- WIRELESS SENSOR SIGNAL RECEIVING . . . 17
- WIND . . . 17
- WEATHER INDEX . . . 18
- WEATHER FORECAST . . . 18
- BAROMETRIC PRESSURE . . . 19
- RAINFALL . . . 19
- MAX / MIN DATA RECORD . . . 19
- PAST 24 HOURS HISTORY DATA . . . 20
- WEATHER ALERT SETTING . . . 20
- BACKLIGHT . . . 21

MAINTENANCE . . . 21
- BATTERY REPLACEMENT . . . 21
- CLEANING THE RAIN COLLECTOR . . . 21
- CLEANING HYGRO-THERMO SENSOR OF WIRELESS 5-IN-1 SENSOR . . . 22

SPECIFICATION . . . 22
- CONSOLE . . . 22
- WIRELESS 5-IN-1 SENSOR . . . 24

FCC COMPLIANCE STATEMENT . . . 25

INTRODUCTION

Thank you for selecting Wi-fi weather station with 5-in-1 professional sensor. This system gathers and automatically uploads accurate and detailed weather data to Weather Underground and Weathercloud website - the famous weather service which allows weather observers to upload their local weather data with automated personal weather stations (PWS) - at which you can access and upload your weather data freely. This product offers professional weather observers or serious weather enthusiasts robust performance with a wide range of options and sensors. You will get your own local forecast, high/lows, totals and averages for virtually all weather variables without using a PC / Mac.

This Weather Station which transmits outdoor temperature, humidity, wind and rain data, which can add to a sensor array of maximum 7 units, transmits your temperature & humidity to the console. Both sensors are fully assembled and calibrated for your easy installation. They send data at a low power radio frequency to the console from up to 150m/450 feet away (line of sight).

In the console, a high-speed processor is embedded to analyze the received weather data and these real-time data can be published to *Wunderground.com* and *weathercloud.net* through your home Wi-fi router. The console can also synchronize with internet time server to keep the time and weather data time stamp of high precision. The color background LCD display shows informative weather readings with advanced features, such as high/low alert alarm, different weather index, and MAX/MIN records. With calibration and moon phase feature, this system is truly a remarkably personal yet professional weather station for your own backyard.

NOTE:

This instruction manual contains useful information on the proper use and care of this product. Please read this manual through to fully understand and enjoy its features, and keep it handy for future use.

OVERVIEW

CONSOLE

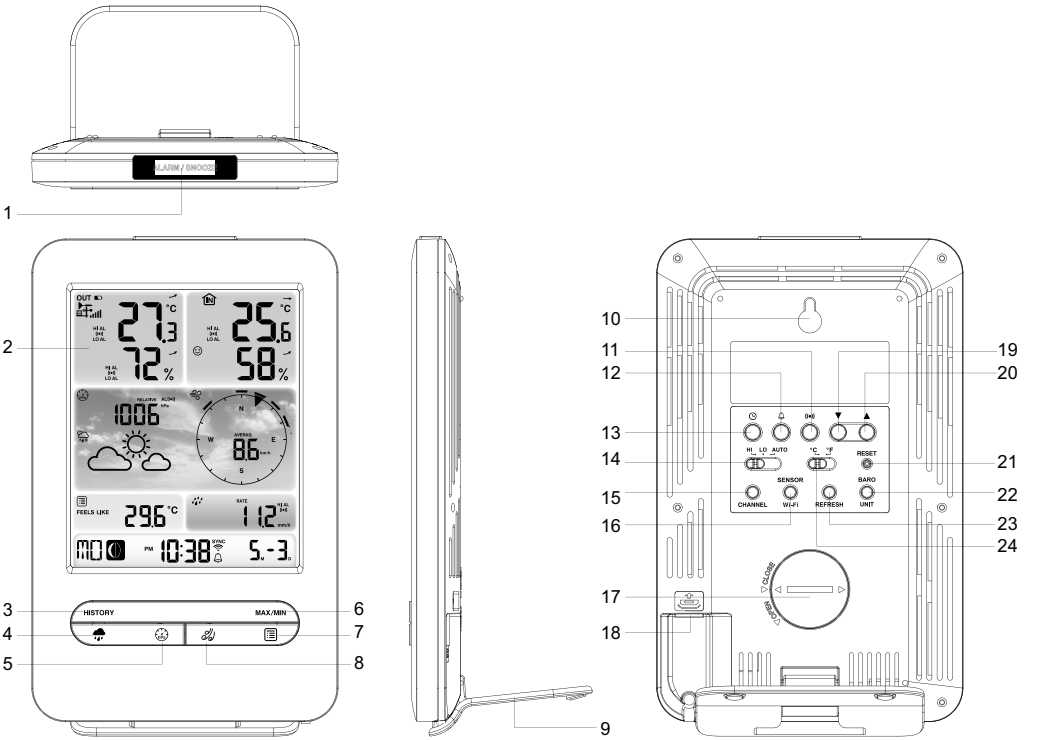

1. **[ALARM/SNOOZE]** key
2. LCD display
3. **[HISTORY]** key
4. **[RAIN]** key
5. **[BARO]** key
6. **[MAX / MIN]** key
7. **[INDEX]** key
8. **[WIND]** key
9. Table stand
10. Wall mounting holder
11. **[ALERT]** key
12. **[ALARM]** key
13. **[CLOCK SET]** key
14. **[HI / LO / AUTO]** key
15. **[CHANNEL]** key
16. **[SENSOR / WI-FI]** key
17. Battery door
18. USB Power socket
19. **[▼]** key
20. **[▲]** key
21. **[RESET]** key
22. **[BARO UNIT]** key
23. **[REFRESH]** key
24. **[°C / °F]** slide switch

LCD DISPLAY

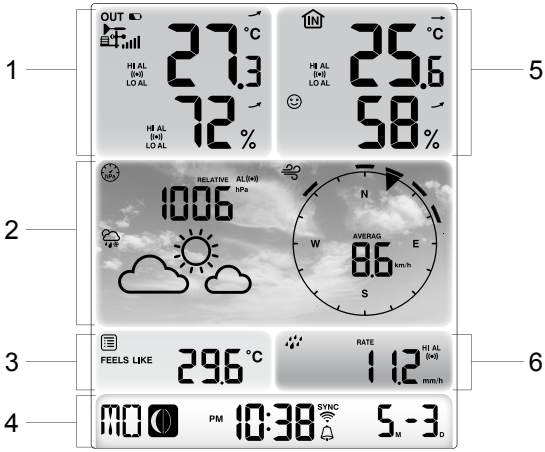

Display section:
1. Outdoor temperature & humidity
2. Weather forecast, Barometer, Wind direction & speed
3. Weather index
4. Time, calendar & moon phase
5. Indoor / CH temperature & humidity
6. Rainfall & Rain rate

WIRELESS 5-IN-1 WEATHER SENSOR

1. Rain collector
2. Balance indicator
3. Antenna
4. Wind cups
5. Mounting pole
6. Radiation shield
7. Wind vane
8. Mounting base
9. Mounting clamp
10. Red LED indicator
11. **[RESET]** key
12. Battery door
13. Screws

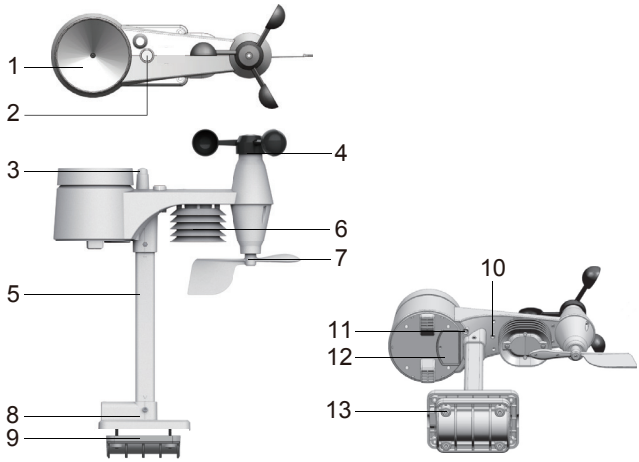

RAIN GAUGE

1. Rain collector
2. Tipping bucket
3. Drain holes
4. Rain sensor

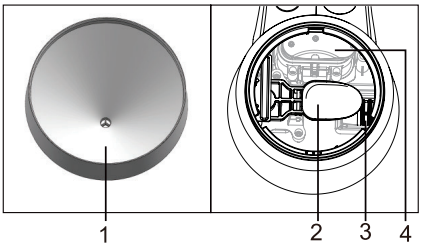

TEMPERATURE AND HUMIDITY SENSOR

1. Radiation shield Sensor casing
2. Temperature and humidity sensor (inside the radiation shield)

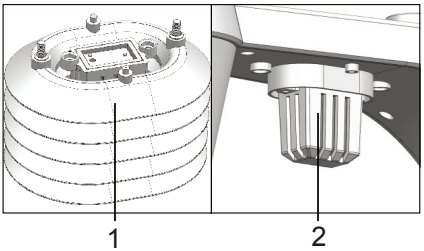

WIND SENSOR

1. Wind cups (anemometer)
2. Wind vane

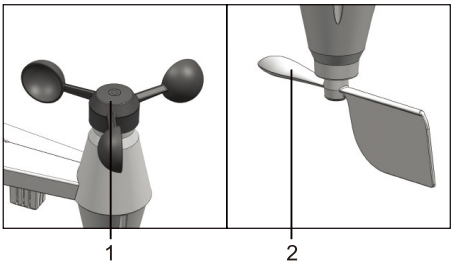

INSTALLATION AND SETUP

INSTALL WIRELESS 5-IN-1 WEATHER SENSOR

Your wireless 5-IN-1 sensor measures wind-speed, wind-direction, rainfall, temperature and humidity for you. It's assembled and calibrated for your easy installation.

INSTALL BATTERIES

Unscrew the battery door at bottom of unit and insert the batteries according to the +/- polarity indicated.
Screw the battery door compartment on tightly.

NOTE:

- Ensure the water tight O-ring is properly aligned in place to ensure water resistant.
- The red LED will begin flashing every 12 seconds.

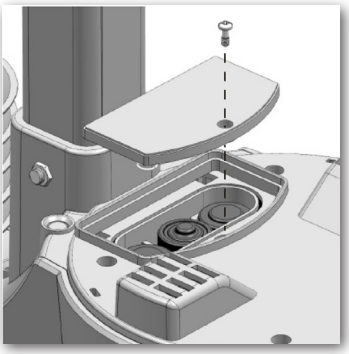

ASSEMBLY THE STAND AND POLE

Step 1 Insert the top side of the pole to the square hole of the weather sensor. **NOTE:** Ensure the pole and sensor's indicator align.	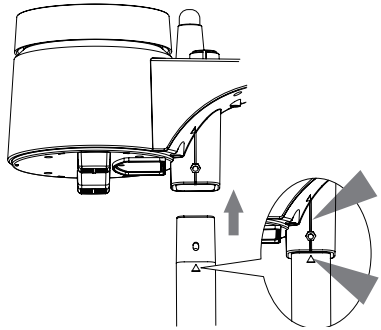
Step 2 Place the nut in the hexagon hole on the sensor, then insert the screw in other side and tighten it by the screw driver.	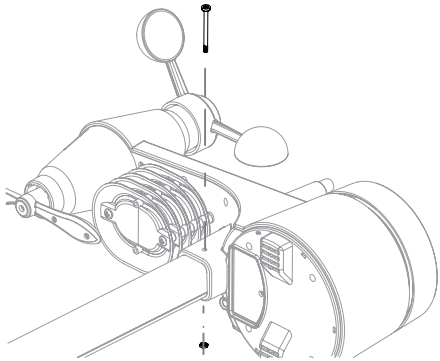
Step 3 Insert the other side of the pole to the square hole of the plastic stand. **NOTE:** Ensure the pole and stand's indicator align.	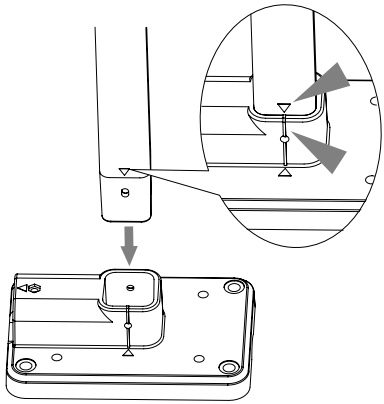
Step 4 Place the nut in the hexagon hole of the stand, then insert the screw in other side and then tighten it by the screw driver.	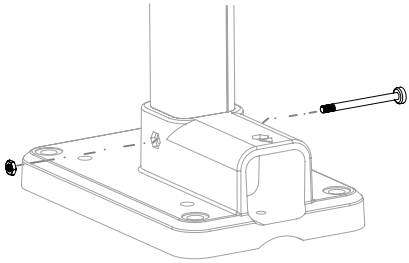

Install the wireless 5-IN-1 sensor in an open location with no obstructions above and around the sensor for accurate rain and wind measurement. Install the sensor with the smaller end facing the North to properly orient the wind direction vane.
Secure the mounting stand and bracket (included) to a post or pole, and allow minimum 1.5m off the ground.

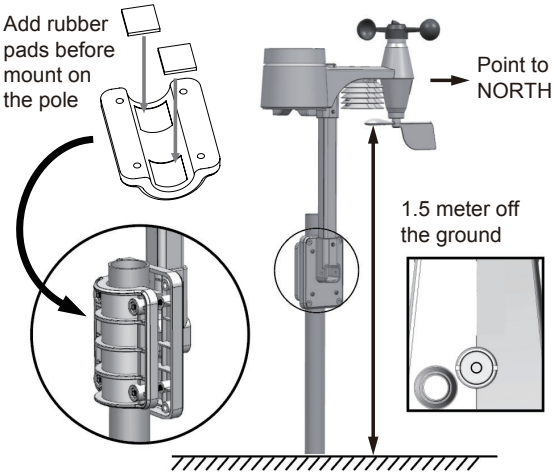

POWER UP CONSOLE

Your console can pairing up with the wireless 5-IN-1 outdoor weather sensor and up to 7 optional wireless sensors. (Not included)

INSTALL THE BACKUP BATTERY

1. Remove the battery door of the console.
2. Insert a new CR2032 battery as per the polarity information marked on the battery compartment.
3. Replace the battery door.

NOTE:
The backup battery can backup: Time & Date, Max/Min & Past 24 hours weather records, Alert setting values, offset value of weather data and Sensor(s) channel history.
The built-in memory can backup: Router setting and Weather server setting

POWER UP THE CONSOLE

1. Plug the power adapter USB plug to power up the main unit.
2. Once the main unit power up, all the segments of the LCD will be shown.
3. The console will automatically start AP mode.

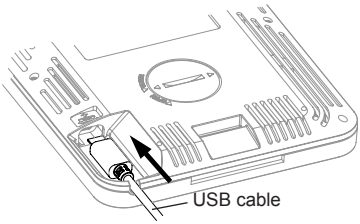

NOTE:
If no display appears on the LCD after you plug the adaptor, press **[RESET]** key by using a pointed object.

TABLE STAND INSTALLATION

The unit is designed for desktop or wall mount for easy viewing. follow the steps to hook the table stand on the botton of the console.

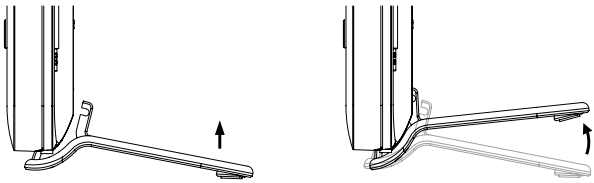

Step 1 Step 2

SET LCD DISPLAY VIEWING ANGLE

Press **[▲]** or **[▼]** key in normal mode to adjust LCD viewing angle to fit table stand or wall mount situation.

PAIRING WIRELESS 5-IN-1 WEATHER SENSOR & CONSOLE

After insert of batteries, the console will automatically search and connect the wireless 5-IN-1 sensor (the sensor antenna icon blinking).
Once the connection is successful, antenna icon and readings for outdoor temperature & humidity, wind speed, wind direction and rainfall will appear on the LCD.

CHANGING BATTERIES AND MANUAL PAIRING OF SENSOR

Whenever you changed the batteries of the wireless 5-IN-1 sensor, pairing must be done manually.

1. Change all the batteries to new ones in the sensor.
2. Press **[SENSOR / WI-FI]** key on the console.
3. Press **[RESET]** key on the wireless 5-IN-1 sensor.

PAIRING ADDITIONAL WIRELESS SENSOR(S) & CONSOLE (OPTIONAL)

This console can support up to 7 additional wireless sensor(s). You can press **[SENSOR / WIFI]** key to search the on display channel's sensor manually. Once your sensor paired up, the sensor signal strength indicator and weather reading will appear on your console display.

NOTE:

- The additional wireless sensor(s) is not included.
- This console can support different type of additional wireless sensor, e.g. soil moisture and pool sensor. Check with your retailer for more detail.

CREATE WEATHER SERVER ACCOUNT & SETUP WI-FI CONNECTION

The console can upload weather data to WUnderground and / or Weathercloud through WI-FI router. you can follow the step below to setup your device.

NOTE:

The Weather Underground and Weathercloud website are subject to change.

CREATE WEATHER UNDERGROUND ACCOUNT

1. In *https://www.wunderground.com* click the "**Join**" on the top right corner to open the registration page. Follow the instructions to create your account.

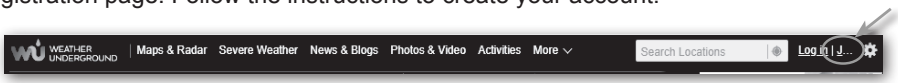

NOTE:

Use the valid email address to register your account.

2. After you have created your account and completed the Email validation, please go back to the WUndergound web page to login. Then, click "*My Profile*" button on the top to open the drop-down menu and click **"My Weather Station"**.

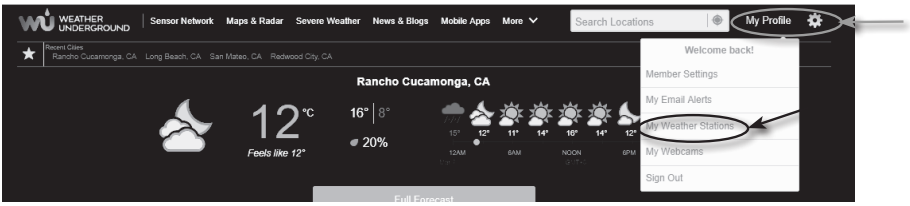

3. In "My Weather Station" page bottom, press the "Add New Device" button to add your device.
4. In step “Select a Device Type”, choose “Other” in the list, then press “Next”.

5. In step “Set Device Name & Location”, select your location in on the map.

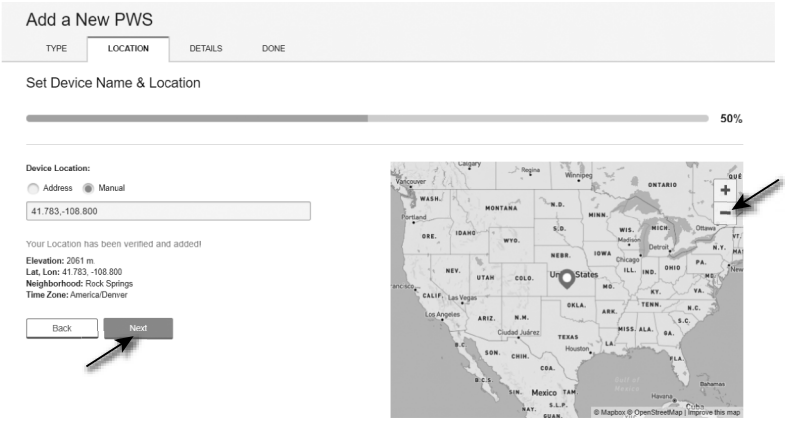

6. Follow their instruction to enter your station information, in the Step "Tell Us More About Your Device", enter a Name for your weather station, then choose “**Other**” in “**Device Hardware**” section. fill in other the other information and select "**I Accept**" to accept Weather underground's privacy terms, then click “**Next**” to create your station ID and key.

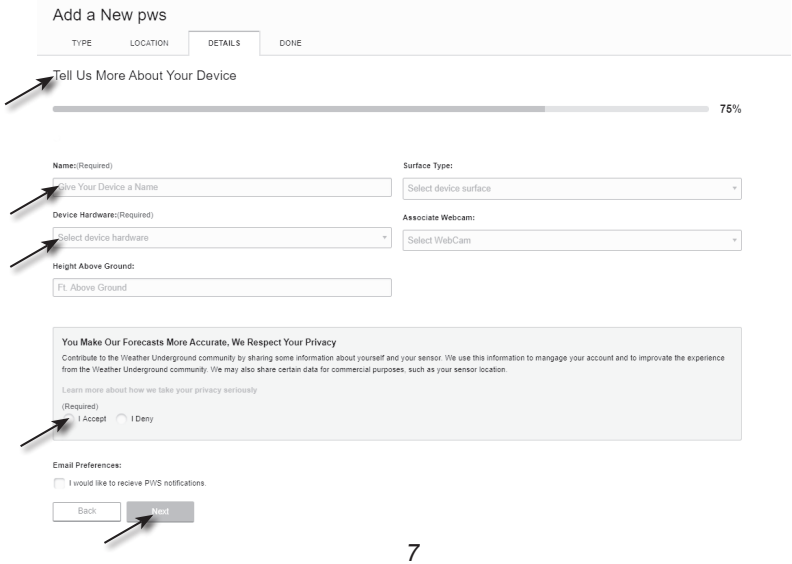

7. Jot down Your "Station ID" and "Station key" for the further setup step.

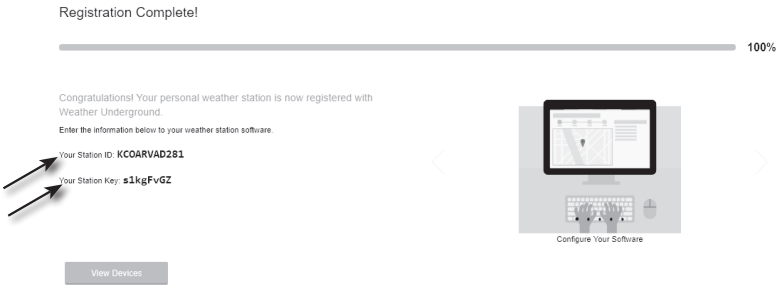

CREATE WEATHERCLOUD ACCOUNT

1. In *https://weathercloud.net* enter your information in "**Join us today**" section, then follow the instructions to create your account.

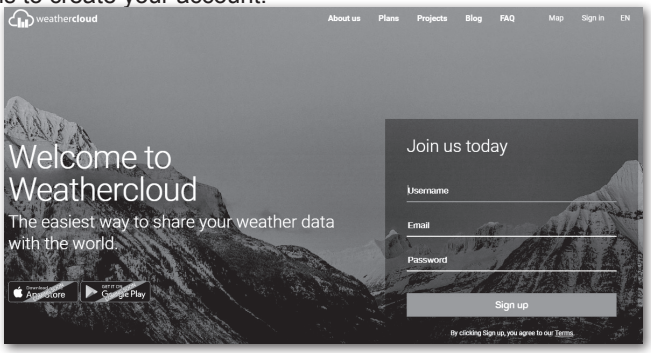

NOTE:
Use the valid email address to register your account.

2. Sign in weathercloud and then you will go the "Devices" page, click "+ New" to create new device.

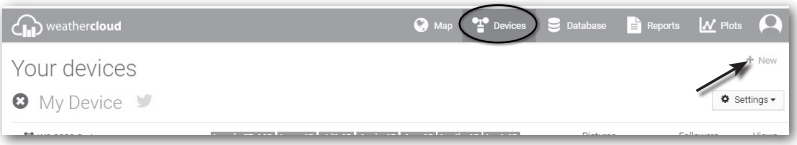

3. Enter all the information in **Create new device** page, for the **Model*** selection box select the "W100 Series" under "CCL" section. for the Link type* selection box select the "Pro Weather Link", Once you have completed, click **Create**.

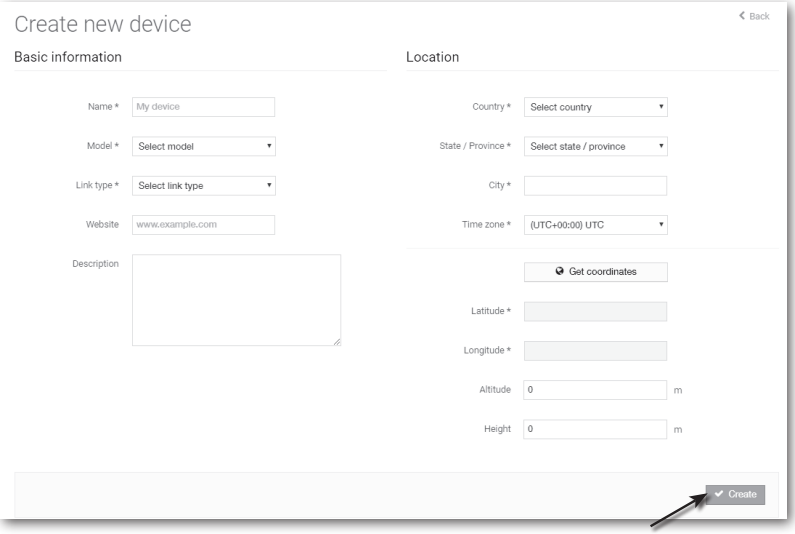

4. Jot down your ID and key for the further setup step.

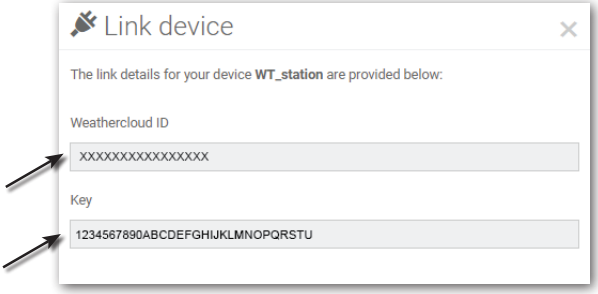

SETUP WI-FI CONNECTION

1. When you first power up the console, or press and hold the **[SENSOR / WI-FI]**key for 6 seconds in normal mode, the console LCD will show "AP" and " ⌔ " icon to signify that it has entered AP (access point) mode, and is ready for WI-FI settings.

2. Use the smart phone, tablet, or computer to connect to the console through WI-FI.

3. In PC / Mac choose WiFi network settings or In Android / iOS choose setting → WI-FI to select the console's SSID: *PWS-XXXXXX* in the list and it will need several second to connect.

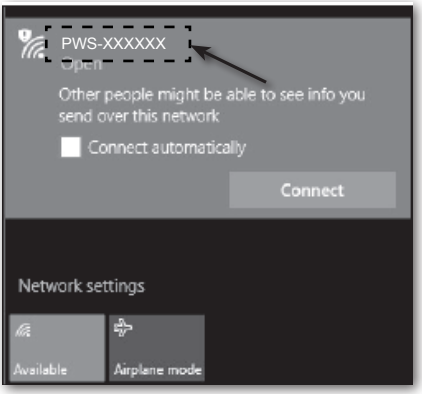

PC WI-FI network interface

Android WI-FI network interface

4. Once connected, enter the following IP address into your internet browser's address bar, to access the console's web interface:

http://192.168.1.1

NOTE :

- Some browsers will treat **192.168.1.1** as a search, so make sure you include **http://** header.
- Recommended browsers, such as the latest version of Chrome, Safari, Edge, Firefox or Opera.

SETUP THE WEATHER SERVER CONNECTION

Enter the following information into the below web interface "SETUP" page. If you choose not to use *Wunderground.com* or *Weathercloud.net*, leave the check boxes unchecked.

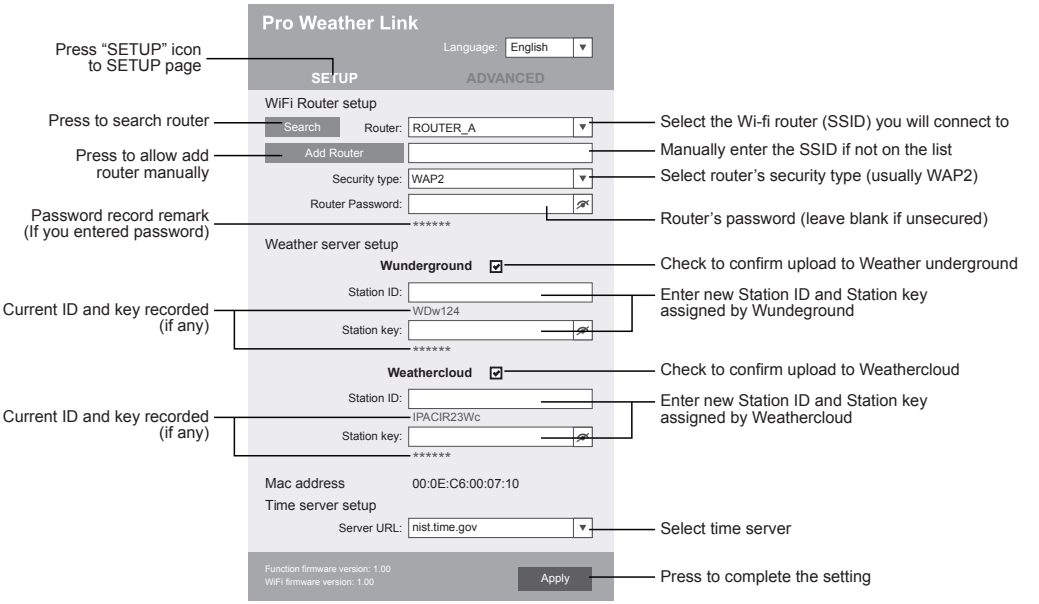

SETUP page

NOTE:

- When WI-FI setup is complete, your PC / Mac or mobile will resume your default WI-FI connection.
- During AP mode, you can press and hold the **[SENSOR / WI-FI]**key for 6 seconds to stop AP mode and the console will restore your previous setting.

WI-FI CONNECTION STATUS

Below is the WI-FI icon status on the console LCD:

Stable: Console is in connection with WI-FI router	Flashing: Console is trying to connect to WI-FI router	Flashing: Console currently in Access Point (AP) mode

TIME SERVER CONNECTION STATUS

After the console has connected to the internet, it will attempt to connect to the internet time server to obtain the UTC time. Once the connection succeeds and the console's time has been updated, the " **SYNC** " icon will appear on the LCD.

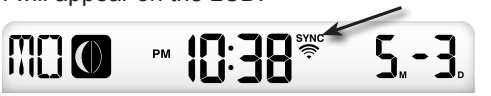

Time zone: To display the time of your time-zone, change the time zone in CLOCK setting mode from '00' (default) to your time zone (e.g.08 for Hong Kong).

1. Press and hold **[CLOCK SET]** key for 2s to enter time setting mode.
2. Press **[▲]** or **[▼]** key to enter your time zone, then press and hold **[CLOCK SET]** key to confirm and exit. Please refer to MANUAL CLOCK SETTING session of manual for details of

other setting for the console.
The time will automatically synchronize Internet time server at 12:00AM and 12:00PM per day. Also you can press the **[REFRESH]** key to get the internet time manually within 1 minute.

ADVANCE SETTING IN WEB INTERFACE

Press **"ADVANCED"** key at the top of web interface to enter the advance setting page, this page allow you to set and view the calibration data of the console, also you can update the firmware in here (Only available in PC / Mac platform).

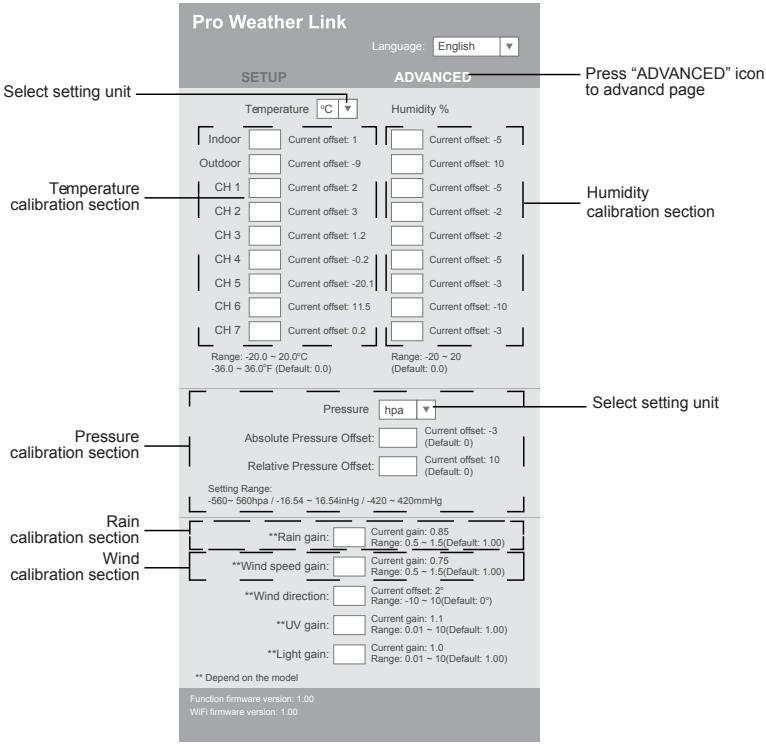

Advancd page

CALIBRATION

1. User may enter or change the offset and gain values for different measurement parameters while current offset and gain values are shown next to their corresponding boxes.
2. Once completed, press Apply in the SETUP page

The current offset value will show the previous value that you entered, if you want to change, just input the new value in the blank, the new value will valid once you press Apply icon in SETUP page.

NOTE:

Calibration of most parameter is not required, with the exception of Relative Pressure, which

must be calibrated to sea-level to account for altitude effects.

VIEW YOUR WEATHER DATA IN WUNDERGROUND

To view your weather station live data in a web browser (PC / Mac or mobile version), please visit *http://www.wunderground.com*, and then enter your “Station ID” in the searching box. Your weather data will show up on the next page. You can also login your account to view and download the recorded data of your weather station.

Another way to view your station is use the web browser URL bar, type below in the URL bar:

https://www.wundergound.com/dashboard/pws/XXXX

Then replace the XXXX by your Weather underground station ID to go to your station live view directly.

You can also check Weather Underground web site to learn more about their mobile App for Android and iOS.

VIEWING YOUR WEATHER DATA IN WEATHERCLOUD

1. To view your weather station live data in a web browser (PC / Mac or mobile version), please visit https://weathercloud.net and sign in your own account.
2. Click the View icon inside the Settings pull down menu of your station.

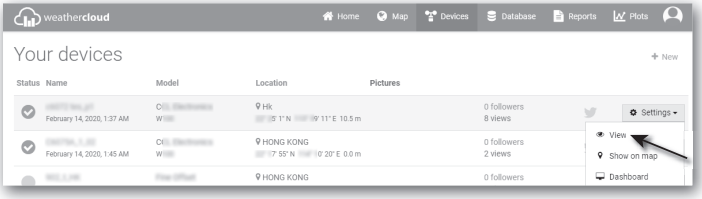

3. Click "**Current**", "**Wind**", "**Evolution**" or "**Inside**" icon to view the live data of your weather station.

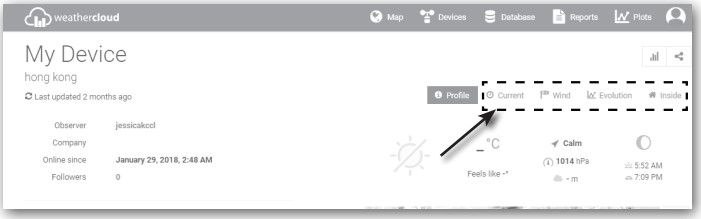

FIRMWARE UPDATE

The console supports OTA firmware update capability. Its firmware may be updated over the air anytime (whenever necessary) through any web-browser on a PC / Mac with WI-FI connectivity. Update function, however, is not available through mobile/smart devices.
Two types of firmware updates are available, namely Function Firmware and System WI-FI Firmware, and are located at the bottom of ADVANCED page.

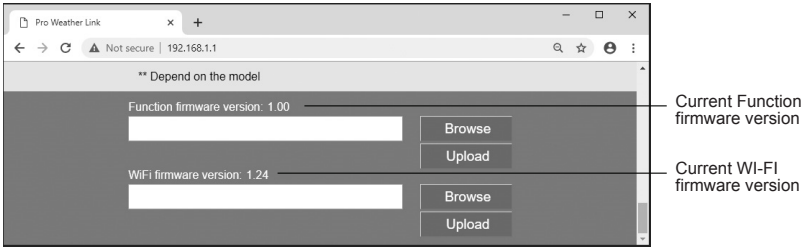

FIRMWARE UPDATE STEP

1. Download the latest version firmware (function or WI-FI) to your PC / Mac.
2. Set the Console into AP (access point) mode then connect the PC / Mac to the console (ref to "SETUP WI-FI CONNECTION" section in previous page).
3. To update the Function firmware, click the Browse in Function firmware section and browse to the location of the file you download in step 1. To update the WI-FI firmware, click the Browse in WI-FI firmware section.
4. Click the corresponding Upload to start transfer the firmware file to console (indicated by a transfer completion %).

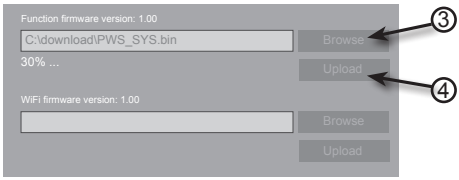

5. Once the console received the firmware file, it executes the update automatically as indicated by the update progress on display (i.e. 100 is completion).

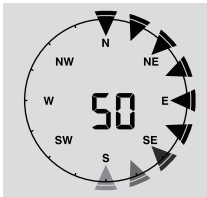

6. The console will restart once the update completed.

NOTE:

- Function and WI-FI firmware cannot be updated at the same time, you need to update one by one.
- Please keep connecting the power during the firmware update process.
- Please make sure your PC / Mac's WI-FI connection is stable.

- When the update process start, do not operate the PC / Mac and console.
- During firmware update the console will stop upload data. It will reconnect to your WI-FI router and upload the data again once the update success. If the console cannot connect to your router, please end the SETUP page to setup again.
- After the firmware updates, user might need to input the Weather Underground ID and password again.

OTHER SETTING & FUNCTIONS OF THE CONSOLE

MANUAL CLOCK SETTING

This console is designed to obtain the local time by synchronize with the assigned internet time server. If you want to use it offline, you can set the time and date manually. During the first time startup, press and hold the **[SENSOR / WI-FI]**key for 6 seconds and let the console back to normal mode.

1. In normal mode, press and hold **[CLOCK SET]** key for 2 seconds to enter setting.
2. The setting sequence: Time Zone → DST ON/OFF → Hour → Minute → 12/24 hour format → Year → Month → Day → M-D/D-M format → Time sync ON/OFF → weekday Language.
3. Press **[▲]** or **[▼]** key to change the value. Press and hold the key for quick-adjust.
4. Press **[CLOCK SET]** key to save and exit the setting mode, or the unit will automatically exit the setting mode 60 seconds later without pressing any key.

NOTE:

- In normal mode, press **[CLOCK SET]** key to switch between year and date display.
- During the setting, you can press and hold **[CLOCK SET]** key for 2 seconds to back to normal model.

MOON PHASE

The moon phase is determined by the time, date and time zone. The following table explains the moon phase icons of the Northern and Southern hemispheres. Please refer to ***ORIENTING THE 5-IN-1 SENSOR TOWARDS SOUTH*** section about how to setup for the Southern hemispheres.

Northern hemisphere	Moon Phase	Southern hemisphere
	New Moon	
	Waxing Crescent	
	First quarter	
	Waxing Gibbous	
	Full Moon	
	Waning Gibbous	
	Third quarter	
	Waning Crescent	

POINTING THE WIRELESS 5-IN-1 SENSOR TO SOUTH

The outdoor 5-IN-1 sensor is calibrated to point to North for the maximum accuracy. However,

for the user's convenience (e.g. users in the Southern hemisphere), it is possible to use the sensor with the wind vane pointing to South.

1. Install the 5-IN-1 wireless sensor with its wind meter end pointing to South. (Please refer to **INSTALLATION OF THE WIRELESS SENSOR** for mounting details)
2. In normal mode of the console, press and hold **[INDEX]** key for 10 seconds to enter into the calibration mode, then press **[INDEX]** key again until the “N” icon appears on the left botton corner of the LCD to enter into the sensor orientation mode
3. Use **[▲]** or **[▼]** key to change to lower part (Southern Hemisphere).
4. Press **[INDEX]** key to confirm and exit.

NOTE:
Changing the hemisphere setting will automatically switch the direction of the moon phase on the display.

SETTING ALARM TIME

1. In normal time mode, press and hold **[ALARM]** key for 2 seconds until the alarm hour digit flashes to enter alarm time setting mode.
2. Press **[▲]** or **[▼]** key to change the value. Press and hold the key for quick-adjust.
3. Press **[ALARM]** key again to step the setting value to Minute with the Minute digit flashing.
4. Press **[▲]** or **[▼]** key to adjust the value of the flashing digit.
5. Press **[ALARM]** key to save and exit the setting.

NOTE:
- In alarm mode, the “ 🔔 ” icon will display on the LCD.
- The alarm function will turn on automatically once you set the alarm time.

ACTIVATING ALARM AND TEMPERATURE PRE-ALARM FUNCTION

1. In normal mode, press **[ALARM]** key to show the alarm time for 5 seconds.
2. When the alarm time displays, press **[ALARM]** key again to activate the alarm function. **Or** press **[ALARM]** key twice to activate the alarm with ice pre-alarm function.

Alarm off	**Alarm on**	**Alarm with ice-alert**

NOTE:
Once the ice pre-alert activates, the pre-set alarm will sound and ice-alert icon will flash 30 minutes earlier if the outdoor temperature is below -3°C.

When clock reach the alarm time, alarm sound will start.
Where it can be stopped by following operation:
- Auto-stop after 2 minutes alarming if without any operation and the alarm will activate again in the next day.
- By pressing **[ALARM/SNOOZE]** key to enter snooze that the alarm will sound again after 5 minutes.
- By pressing and hold **[ALARM/SNOOZE]** key for 2 seconds to stop the alarm and will activate again in the next day
- By pressing **[ALARM]** key to stop the alarm and the alarm will activate again in the next day.

NOTE:
- The snooze could be used continuously in 24 hours.
- During the snooze, the alarm icon “ 🔔 ” will keep flashing.

TEMPERATURE / HUMIDITY FUNCTION & TREND

Use the **[°C / °F]** slide switch to select the temperature display unit.
The temperature / humidity trend indicator shows the trends of changes in the forthcoming few minutes.

Arrow indicator	↗	→	↘
Temperature / Humidity trend	Rising	Steady	Falling

NOTE:

- When indoor temperature is below -40°C, the LCD will display “Lo”. If temperature is above 70°C, LCD will display “HI”.
- When outdoor temperature is below -40°C, the LCD will display “Lo”. If temperature is above 80°C, LCD will display “HI”.
- When humidity is below 1%, LCD will display “Lo”. If humidity is above 99%, LCD will display “HI”.

COMFORT INDICATION

The comfort indication is a pictorial indication based on indoor air temperature and humidity in an attempt to determine comfort level.

☹	☺	☹
Too cold	**Comfortable**	**Too hot**

NOTE:

- Comfort indication can vary under the same temperature, depending on the humidity.
- There is no comfort indication when temperature is below 0°C (32°F) or over 60°C (140°F).

WIRELESS SENSOR SIGNAL RECEIVING

1. The console display signal strength for the wireless 5-IN-1 sensor, as per table below:

No signal	**Weak signal**	**Good signal**

2. If the signal has discontinued and does not recover within 15 minutes, the signal icon will disappear. The temperature and humidity will display “Er” for the corresponding channel.
3. If the signal does not recover within 48 hours, the “Er” display will become permanent. You need to replace the batteries and then press **[SENSOR / WI-FI]** key to pair up the sensor again.

VIEW THE OUTDOOR CHANNEL (OPTIONAL FEATURE WITH ADD ON EXTRA THERMAL HYGRO SENSORS)

This console is capable to pair with a wireless 5-IN-1 sensor and up to 7 wireless thermal-hygro sensors. If you have 2 or more sensors, you can press **[CHANNEL]** key to switch between different wireless channels in normal mode, or press and hold **[CHANNEL]** key for 2 seconds to toggle auto-cycle mode to display the connected channels at 4 seconds interval.
During auto-cycle mode, press **[CHANNEL]** key to stop auto cycle and display the current channel.

WIND

WIND SPEED AND DIRECTION SECTION OVERVIEW

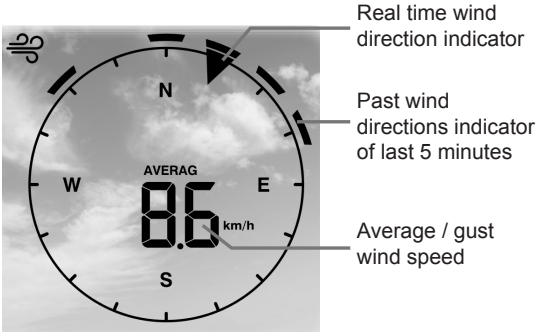

TO SET THE WIND SPEED UNIT AND DIRECTION DISPLAY FORMAT

1. In normal mode, press and hold **[WIND]** key for 2 seconds to enter into wind speed unit mode and the unit will flash. Press **[▲]** or **[▼]** key to change the wind speed unit in this sequence: m/s → km/h → knots → mph
2. Press **[WIND]** key again to return to normal mode.

TO SELECT THE WIND DISPLAY MODE

In normal mode, press **[WIND]** key to switch between **AVERAGE** and **GUST** wind speed.

WEATHER INDEX

At the WEATHER INDEX section, you can press **[INDEX]** key to view the weather index in this sequence: **FEELS LIKE → HEAT INDEX → WIND CHILL → DEWPOINT.**

FEELS LIKE

The feels like temperature index determine how the outdoor temperature that people actually feel.

HEAT INDEX

The heat index, which is determined by the wireless 5-IN-1 sensor's temperature & humidity data, when the temperature is between 27°C (80°F) and 50°C (120°F).

Heat Index range	Warning	Explanation
27°C to 32°C (80°F to 90°F)	Caution	Possibility of heat exhaustion
33°C to 40°C (91°F to 105°F)	Extreme Caution	Possibility of heat dehydration
41°C to 54°C (106°F to 129°F)	Danger	Heat exhaustion likely
≥55°C (≥130°F)	Extreme Danger	Strong risk of dehydration / sun stroke

WIND CHILL

A combination of the wireless 5-IN-1 sensor's temperature and wind speed data determines the current wind chill factor.

DEW POINT

- The dew point is the temperature below which the water vapor in air at constant barometric pressure condenses into liquid water at the same rate at which it evaporates. The condensed water is called *dew* when it forms on a solid surface.
- The dew point temperature is determined by the temperature & humidity data from wireless 5-IN-1 sensor.

WEATHER FORECAST

The built-in barometer can notice atmosphere pressure changes. Based on the data collected,

it can predict the weather conditions in the forthcoming 12~24 hours within a 30~50km (19~31 miles) radius.

Sunny	Partly cloudy	Cloudy	Rainy	Rainy / Stormy	Snowy

NOTE:
- The accuracy of a general pressure-based weather forecast is about 70% to 75%.
- The weather forecast is reflecting the weather situation for next 12~24 hours, it may not necessarily reflect the current situation.
- The **SNOWY** weather forecast is not based on the atmospheric pressure, but based on the temperature of outdoor. When the temperature is below -3°C (26°F), the **SNOWY** weather icon will be displayed on the LCD.

BAROMETRIC PRESSURE

The atmospheric pressure is the pressure at any location of the earth caused by the weight of the column of air above it. One atmospheric pressure refers to the average pressure and gradually decreases as altitude increases. Meteorologists use barometers to measure atmospheric pressure. Since variation in atmospheric pressure greatly affected by weather, it is possible to forecast the weather by measuring the changes in pressure.

TO SET THE BAROMETER UNIT

In normal mode, press **[BARO UNIT]** key to change the barometer unit in this sequence: hPa → inHg → mmHg

TO VIEW THE ABSOLUTE / RELATIVE BAROMETRIC READING

In normal mode, press **[BARO]** key to switch between **ABSOLUTE / RELATIVE** barometric reading.

RAINFALL

The **RAINFALL** section shows the rainfall and rain rate information.

TO SET THE RAINFALL UNIT

1. Press and hold **[RAIN]** key for 2 seconds to enter unit setting mode.
2. Press **[▲]** or **[▼]** key to toggle the rainfall unit between mm and in.
3. Press **[RAIN]** key to confirm and exit the setting.

TO SELECT THE RAINFALL DISPLAY MODE

Press **[RAIN]** key to toggle between:

1. **HOURLY** - the total rainfall in the past hour
2. **DAILY** - the total rainfall from midnight
3. **WEEKLY** - the total rainfall of the current week
4. **MONTHLY**- the total rainfall of the current calendar month

5. **Total** - the total rainfall since the last reset
6. **Rate** - Current rainfall rate in past an hour (Update every 24 seconds)

TO RESET THE TOTAL RAINFALL RECORD
In normal mode, press and hold **[HISTORY]** key for 2 seconds to reset all the rainfall record.

NOTE:
To ensure correct data, please reset all the rainfall record when you reinstall your wireless 5-IN-1 sensor to other location

MAX / MIN DATA RECORD
The console can record the accumulated MAX / MIN weather data with the corresponding time stamp for you to easy review.

TO VIEW THE ACCUMULATED MAX / MIN
In normal mode, press **[MAX / MIN]** key to check MAX/MIN records. The display sequence is: indoor (or current channel) MAX temperature → indoor (or current channel) MIN temperature → indoor (or current channel) MAX humidity → indoor (or current channel) MIN humidity → outdoor MAX temperature → outdoor MIN temperature → outdoor MAX humidity → outdoor MIN humidity → MAX average wind speed → MAX gust → MAX relative pressure → MIN relative pressure → MAX absolute pressure → MIN absolute pressure → MAX FEELS LIKE → MIN FEELS LIKE → MAX heat index → MIN heat index → MAX wind chill → MIN wind chill → MAX dew point → MIN dew point → MAX daily rainfall.

TO CLEAR THE MAX/MIN RECORDS
Press and hold **[MAX / MIN]** key for 2 seconds to reset the MAX / MIN records of specify weather display section.

NOTE:
The LCD will also display the "HISTORY" icon, data records time & date.

PAST 24 HOURS HISTORY DATA
The console automatically stores the weather data of the past 24 hours.
1. Press **[HISTORY]** key to check the beginning of the current hour's weather data, e.g. the current time is 7:25 am, March 8, the display will show the data of 7:00am, March 8.
2. Press **[HISTORY]** key repeatedly to view older readings of the past 24 hours, e.g. 6:00am (Mar 8), 5:00am (Mar 8), …, 10:00am (Mar 7), 9:00am (Mar 7), 8:00am (Mar 7)

NOTE:
The LCD will also display the "HISTORY" icon, history data records with time & date.

WEATHER ALERT SETTING
Weather Alert can alert you of certain weather conditions. Once the alert criterion is met, the alarm sound will activate and the LCD's alert icon will flash.

TO SET ALERT
1. Press **[ALERT]** to select and display the desired weather alert reading in the sequence below:

Alert reading Sequence	Setting Range	Display Section	Default Value

Indoor Temperature High Alert (current channel)	-40°C ~ 80°C	Indoor / CH temperature & humidity	40°C
Indoor Temperature Low Alert (current channel)			0°C
Indoor Humidity High Alert (current channel)	1% ~ 99%		80%
Indoor Humidity Low Alert (current channel)			40%
Outdoor Temperature High Alert	-40°C ~ 80°C	Outdoor temperature & humidity	40°C
Outdoor Temperature Low Alert			0°C
Outdoor Humidity High Alert	1% ~ 99%		80%
Outdoor Humidity Low Alert			40%
Average Wind Speed	0.1m/s ~ 50m/s	Wind direction & speed	17.2mm/h
Pressure Drop	1hPa ~ 10hPa	Barometer	3hPa
Hourly Rainfall	1mm ~ 1000mm	Rainfall	100mm

2. Under the current alert reading, press and hold **[ALERT]** key for 2 seconds to enter alert setting and the alert reading will flash.
3. Press **[▲]** or **[▼]** key to adjust the value or press and hold the key to change rapidly.
4. Press **[ALERT]** key to confirm the value.
5. Press **[ALARM]** key to toggle the regarding alert on / off.
6. Press **[ALERT]** key to step to next alert reading.

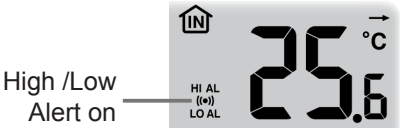

Alert on

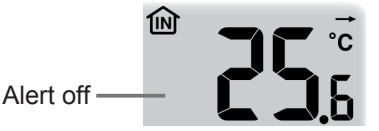

Alert off

7. Press any key on the front side to save alert on /off status and back to normal mode, or it will automatically back to normal mode after 30 seconds without pressing any key.

TO SILENCE THE ALERT ALARM

Press **[ALARM / SNOOZE]** key to silence the alert alarm or let the alarm automatically turn off after 2 minutes.

NOTE:

- Once the alert is triggered, the alarm will sound for 2 minutes and the related alert icon and readings will flash.
- If the alert alarm is automatically off after 2 minutes, the alert icon and readings will still keep flash until the weather reading is out of the alert range.
- The weather alert will sound again when the weather readings falls into the alert range again.

BACKLIGHT

The main unit backlight can be adjust, using the **[HI / LO / AUTO]** sliding switch to select the appropriate brightness:

- Slide to the **[HI]** position for the brighter backlight.
- Slide to the **[LO]** position for the dimmer backlight.
- Slide to the **[AUTO]** position for the auto adjust backlight that according to environment light level.

MAINTENANCE

BATTERY REPLACEMENT

If the low battery indicator " " displayed in OUT or CH section, it indicates that the current channel wireless or outdoor 5-in-1 sensor battery power is low. You should replace all the batteries in the current channel sensor at once.

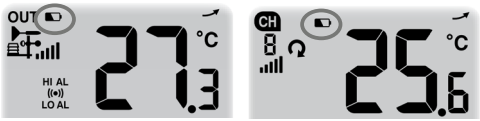

CLEANING THE RAIN COLLECTOR

1. Unscrew the rain collector by turning it 30°anti-clockwise.
2. Gently remove the rain collector.
3. Clean and remove any debris or insects.
4. Install the collector when it is clean and fully dried.

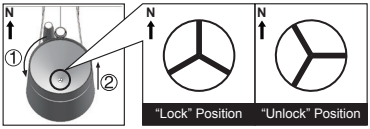

CLEANING HYGRO-THERMO SENSOR OF WIRELESS 5-IN-1 SENSOR

1. Remove the 2 screws at the bottom of the radiation shield.
2. Gently pull out the shield.
3. Carefully remove any dirt or insects on the sensor casing (do not let the sensors inside get wet).
4. Clean the shield with water to remove any dirt or insects.
5. Install all the parts back when they are clean and fully dried.

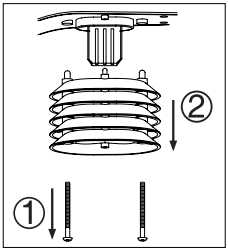

SPECIFICATIONS

CONSOLE

General Specification	
Dimensions (W x H x D)	118 x 192.5 x 21mm (4.6 x 7.6 x 0.83in)without attach table stand
Weight	370g (with batteries)
Main power	DC 5V, 1A adaptor
Backup battery	CR2032, 3V batteries
Operating temperature range	-5˚C ~ 50˚C
Wi-fi Communication Specification	
Wi-fi standard	802.11 b/g/n
Wi-fi operating frequency :	2.4GHz
Supported router security type	WPA/WPA2, OPEN, WEP (WEP only support Hexadecimal pressword)
Supported device for setup UI	Built-in WI-FI with AP mode function smart devices, laptops e.g.: Android smart phone, Android pad, iPhone, iPad or PC/ Mac computer.
Recommended web browser for setup UI	Web browsers that support HTML 5, such as the latest version of Chrome, Safari, Edge, Firefox or Opera.
Wireless Sensor side Communication Specification	
Support sensors	1 Wireless 5-in-1 weather outdoor sensor and up to 7 Wireless hygro-thermo indoor sensors

RF frequency	915Mhz (US version) / 868Mhz (EU or UK version) / 917Mhz (AU version)
RF transmission range	150m
Time Related Function Specification	
Time display	HH: MM
Hour format	12hr AM / PM or 24 hr
Date display	DD / MM or MM / DD
Time synchronize method	Through Internet time server to synchronize the UTC
Weekday languages	EN / DE / FR / ES / IT / NL / RU
Time Zone	+13 ~ -12 hour
DST	ON / OFF
Barometer Display & Function Specification **Note:** The following details are listed as they are displayed or operate on the console.	
Barometer unit	hPa, inHg and mmHg
Measuring range	540 ~ 1100hPa
Accuracy	(700 ~ 1100hPa ± 5hPa) / (540 ~ 696hPa ± 8hPa) (20.67 ~ 32.48inHg ± 0.15inHg) / (15.95 ~ 20.55inHg ± 0.24inHg) (525 ~ 825mmHg ± 3.8mmHg) / (405 ~ 522mmHg ± 6mmHg) Typical at 25°C (77°F)
Resolution	1hPa / 0.01inHg / 0.1mmHg
Weather forecast	Sunny / Clear, Slightly Cloudy, Cloudy, Rainy, Rainy / Stormy and Snowy
Display modes	Current
Memory modes	Historical data of past 24 hours, daily Max / Min
Alarm	Pressure change alert
Indoor / Outdoor Temperature Display & Function Specification **Note:** The following details are listed as they are displayed or operate on the console.	
Temperature unit	°C and °F
Indoor Accuracy	<0°C or >40°C ± 2°C (<32°F or >104°F ± 3.6°F) 0~40°C ±1°C (32~104°F ± 1.8°F)
Outdoor Accuracy	60.1 ~ 80°C ± 0.8°C (140.2 ~ 176°F ± 1.4°F) 5.1 ~ 60°C ± 0.4°C (41.2 ~ 140°F ± 0.7°F) -19.9 ~ 5°C ± 1°C (-3.8 ~ 41°F ± 1.8°F) -40 ~ -20°C ± 1.5°C (-40 ~ -4°F ± 2.7°F)
Resolution	°C / °F (1 decimal place)
Display modes	Current
Memory modes	Historical data of past 24 hours, daily Max / Min
Alarm	Hi / Lo temperature alert
Indoor / Outdoor Humidity Display & Function Specification **Note:** The following details are listed as they are displayed or operate on the console.	
Humidity unit	%
Indoor Accuracy	20~39% or 71~90% RH ±8%RH @ 25°C (77°F) 40~70% RH ±5%RH @ 25°C (77°F) Other range > ±8%RH
Outdoor Accuracy	1 ~ 20% RH ± 6.5% RH @ 25°C (77°F) 21 ~ 80% RH ± 3.5% RH @ 25°C (77°F) 81 ~ 99% RH ± 6.5% RH @ 25°C (77°F)

Resolution	1%
Display modes	Current
Memory modes	Historical data of past 24 hours, Max / Min
Alarm	Hi / Lo Humidity Alert
Wind Speed & Direction Display and Function Specification **Note:** The following detail are listed as they are displayed or operate on the console.	
Wind speed unit	mph, m/s, km/h and knots
Wind speed display range	0 ~ 112mph, 50m/s, 180km/h, 97knots
Resolution	mph, m/s, km/h and knots (1 decimal place)
Speed accuracy	< 5m/s: ± 0.5m/s; > 5m/s: ± 6% (whichever is greater)
Display mode	Gust / Average
Memory modes	Historical Data of past 24 hours, Max Gust / Average
Alarm	Hi Wind Speed Alert (Average / Gust)
Wind direction resolutions	16 directions
Rain Display & Function Specification **Note:** The following details are listed as they are displayed or operate on the console.	
Unit for rainfall	mm and in
Accuracy for rainfall	± 7% or 1 tip
Range of rainfall	0 ~ 19999mm (0 ~ 787.3 in)
Resolution	0.254mm (0.01in)
Display modes	Current
Memory modes	Historical Data of the past 24 hours, Max
Rainfall display mode	Hourly / Daily / Weekly / Monthly / Total rainfall
Alarm	Hi Daily Rainfall Alert
Weather Index Display & Function Specification **Note:** The following details are listed as they are displayed or operate on the console	
Weather index mode	Feels like, Wind Chill, Heat Index and Dew point
Feels like range	-40 ~ 50°C
Wind chill range	-40 ~ 18°C, wind speed >4.8km/h
Heat index range	26 ~ 50°C
Dew point range	-20 ~ 60°C
Display modes	Current
Memory modes	Historical Data of past 24 hours, Max / Min

WIRELESS 5-IN-1 SENSOR

Dimensions (W x H x D)	343.5 x 393.5 x 136mm (13.5 x 15.5 x 5.35in)
Weight	734g (with batteries)
Main power	3 x AA size 1.5V batteries (Lithium batteries recommended)
Weather data	Temperature, Humidity, Wind speed, Wind direction and Rainfall
RF transmission range	150m
RF frequency	915Mhz (US) / 868Mhz (EU, UK) / 917Mhz (AU)
Transmission interval	• 12 seconds for wind speed and wind direction data • 24 seconds for temperature, humidity and rain data
Operating range	-40 ~ 60°C (-40 ~ 140°F) Lithium batteries required

FCC COMPLIANCE STATEMENT

This device complies with Part 15 of the FCC Rules. Operation is subject to the following two conditions:
(1) this device may not cause harmful interference, and (2) this device must accept any interference
received, including interference that may cause undesired operation.
Warning: Changes or modifications not expressly approved by the party responsible for compliance
could void the user's authority to operate the equipment.
NOTE: This equipment has been tested and found to comply with the limits for a Class B digital device,
pursuant to Part 15 of the FCC Rules. These limits are designed to provide reasonable protection
against harmful interference in a residential installation. This equipment generates, uses and can
radiate radio frequency energy and, if not installed and used in accordance with the instructions, may
cause harmful interferenceto radio communications. However, there is no guarantee that interference
will not occur in a particular installation.
If this equipment does cause harmful interference to radio or television reception, which can be determined
by turning the equipment off and on, the user is encouraged to try to correct the interference by one or more of the following measures:
-- Reorient or relocate the receiving antenna.
-- Increase the separation between the equipment and receiver.
-- Connect the equipment into an outlet on a circuit different from that to which the receiver is connected.
-- Consult the dealer or an experienced radio/TV technician for help.

FCC responsible party: Explore Scientific, LLC
Company name: Explore Scientific, LLC
Address: 1010 S. 48th Street, Springdale, AR 72762
Phone: 866.252.3811