JETSON

Alpha L Race Kart + All-Terrain Hoverboard.

A guide for your ride.

IMPORTANT, RETAIN FOR FUTURE REFERENCE: READ CAREFULLY

MODEL: ALPHA (JALPHA-BLK)

Designed in Brooklyn | Made in China

Remember to be safe and, most importantly, have fun!

Table of Contents

Safety Warnings 4

What's in the Box 6

Specs & Features 8

Attaching the Seat 10

Attaching the Cushion 12

Inserting the Brackets 15

Attaching the Nose Cap 17

Inserting the Footrests 19

Attaching the Hoverboard 21

Indicator Lights 24

Connecting to Bluetooth® 25

Recalibrating the Hoverboard 26

Turning the Lights On 27

Getting on the Alpha L 28

Riding the Alpha L 29

Riding the Hoverboard 30

Care & Maintenance 31

Safety Warnings

• Before use, please read the user manual and safety warnings carefully, and make sure you understand and accept all the safety instructions. The user will be responsible for any loss or damage caused by improper use.
• Before each cycle of operation, the operator shall perform the preoperation checks specified by the manufacturer: That all guards and pads originally supplied by the manufacturer are in proper place and in serviceable condition; That the braking system is functioning properly; That any and all axle guards, chain guards, or other covers or guards supplied by the manufacturer are in place and in serviceable condition; That tires are in good condition, inflated properly, and have sufficient tread remaining; The area that the product is to be operated should be safe and suitable for safe operation.
• Components shall be maintained and repaired in accordance with the manufacturer's specifications and using only the manufacturer's authorized replacement parts with installation performed by dealers or other skilled persons.
• Warning against recharging non-rechargeable batteries.
• Don't allow hands, feet, hair, body parts, clothing, or similar articles to come in contact with moving parts, wheels, or drive train, while the motor is running.
• This product should not be used by children or persons with reduced physical, sensory or mental capabilities, or lack of experience and knowledge, unless they have been given supervision or instruction (IEC 60335-1/A2:2006).
• Unsupervised children should not play with the product (IEC 60335-1/A2:2006).
• Adult supervision is required.
• The rider should not exceed 220 lb.
• Units shall not be operated to perform racing, stunt riding, or other maneuvers, which may cause loss of control, or may cause uncontrolled operator/passenger actions or reactions.
• Never use near motor vehicles.
• Avoid sharp bumps, drainage grates, and sudden surface changes. Scooter may suddenly stop.
• Avoid streets and surfaces with water, sand, gravel, dirt, leaves, and other debris. Wet weather impairs traction, braking, and visibility.
• Avoid riding around flammable gas, steam, liquid, or dust that could cause fire.
• Operators shall adhere to all of the manufacturer's recommendations and instructions, as well as comply with all laws and ordinances: Units without headlights shall be operated only with adequate daylight conditions of visibility, and; Owners shall be encouraged to highlight (for conspicuity) using lighting, reflectors, and for low-riding units, signal flags on flexible poles.
• Persons with the following conditions shall be cautioned not to operate: Those with heart conditions; Pregnant women; Persons with head, back, or neck ailments, or prior surgeries to those areas of the body; and persons with any mental or physical conditions that may make them susceptible to injury or impair their physical dexterity or mental capabilities to recognize, understand, and perform all of the safety instructions and to be able to assume the hazards inherent in unit use.
• Do not ride at night.
• Do not ride after drinking or taking prescription medication.
• Do not carry items when riding.
• Never operate the product barefooted.
• Always wear shoes and keep shoelaces tied.

• Make sure your feet are always placed securely on the deck.
• Operators always shall use appropriate protective clothing, including but not limited to a helmet, with appropriate certification, and any other equipment recommended by the manufacturer: Always wear protective equipment such as helmet, knee pads, and elbow pads.
• Always give way to pedestrians.
• Be alert to things in front and far away from you.
• Do not allow distractions when riding, such as answering the phone or engaging in any other activities.
• The product cannot be ridden by more than one person.
• When you ride the product along with other riders, always keep a safe distance to avoid a collision.
• When turning, be sure to maintain your balance.
• Riding with improperly adjusted brakes is dangerous and can result in serious injury or death.
• The brake may become hot while operating, do not touch the brake with your bare skin.
• Applying brakes too hard or too suddenly can lock up a wheel, which could cause you to lose control and fall. Sudden or excessive application of the brake may result in injury or death.
• If the brake loosens, please adjust with the hexagon wrench, or please contact Jetson Customer Care.
• Replace worn or broken parts immediately.
• Check whether all safety labels are in place and understood before riding.
• The owner shall allow the use and operation of the unit after a demonstration that such operators can understand and operate all components of the unit before use.
• Do not ride without proper training. Do not ride at high speeds, on uneven terrain, or on slopes. Do not perform stunts or turn abruptly.
• Recommended for indoor use.
• Prolonged exposure to UV rays, rain and the elements may damage the enclosure materials, store indoors when not in use.

California Proposition 65

⚠WARNING:

This product can expose you to a chemical such as Cadmium that is known to the state of California to cause cancer or birth defects or other reproductive harm. For more information go to www.p65warnings.ca.gov/product

MODIFICATIONS

Do not attempt to disassemble, modify, repair, or replace the unit or any components of the unit without instruction from Jetson Customer Care. This will void any warranty, and can lead to malfunctions which may cause injury.

ADDITIONAL OPERATION CAUTIONS

Do not lift the product off the ground while it is on and the wheels are in motion. This can result in freely spinning wheels, which may cause injury to yourself or others nearby. Do not jump on or off the product, and do not jump while using it. Always keep your feet firmly planted on the foot rest while in operation. Always check the battery charge before using.

What's in the Box

1. FRAME
2. SEAT
3. CUSHION
4. HOVERBOARD
5. BRACKET (2X)
6. VELCRO STRAP (2X)
7. FOOTREST (2X)
8. NOSE CAP

HARDWARE / TOOLS INCLUDED:

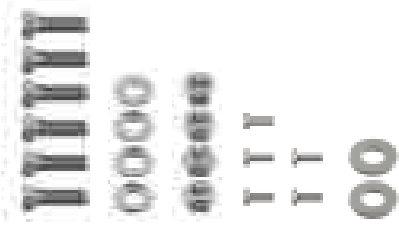

A (6X) B (4X) C (4X) D1 (3X) D2 (2X) E (2X)

WRENCH SCREW

*ADULTS MUST ASSIST CHILDREN IN THE INITIAL ADJUSTMENT PROCEDURES OF THE PRODUCT.

PLEASE NOTE: IMAGES MAY NOT REFLECT EXACT APPEARANCE OF ACTUAL PRODUCT.

Specs & Features

ALPHA L:

- WEIGHT LIMIT: 220 LB
- PRODUCT WEIGHT: 16 LB
- RECOMMENDED AGE: 12+
- TIRE SIZE: 4”
- DIMENSIONS: 47.3” (L) × 22.8” (W) × 15.3” (H)

HOVERBOARD:

- MAX SPEED: UP TO 9 MPH
- MAX RANGE: UP TO 12 MILES
- BATTERY: 25.2V, 4.0AH LITHIUM-ION
- MOTOR: 500W DUAL HUB MOTOR, (250W X 2)
- PRODUCT WEIGHT: 16.5 LB
- PRODUCT DIMENSIONS: 24.4” × 7.7” × 7.4”
- TIRE SIZE: 6.5”
- CHARGER: UL LISTED, 100-240V
- CHARGE TIME: UP TO 4 HOURS
- CLIMBING ANGLE: UP TO 15°
- WEIGHT LIMIT: 220 LB
- RECOMMENDED AGE: 12+

1. Get Started

1.1 Attaching the Seat

• PLACE SEAT ON TOP OF ALPHA L'S FRAME. ALIGN SCREW HOLES IN SEAT WITH SCREW HOLES ON FRAME.
• SCREW BOLTS THROUGH SEAT AND FRAME.
• ON THE UNDERSIDE OF THE FRAME THREAD WASHER AND NUTS ONTO BOLTS AND TIGHTEN.

NOTE: BE CAREFUL NOT TO OVERTIGHTEN THE BOLTS. DOING SO MAY CAUSE THE SEAT TO CRACK.

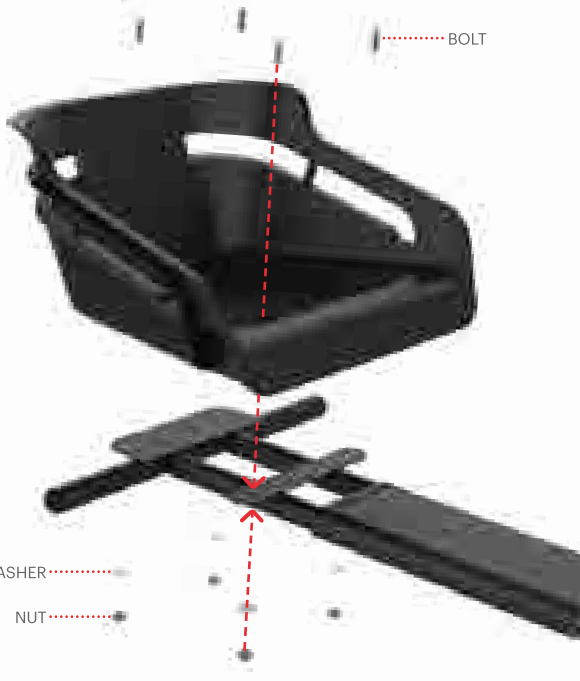

- MAKE SURE SEAT IS SECURELY ATTACHED.

1.2 Attaching the Cushion

• TEAR OFF THE WHITE PROTECTIVE PAPER ON THE UNDERSIDE OF CUSHION.

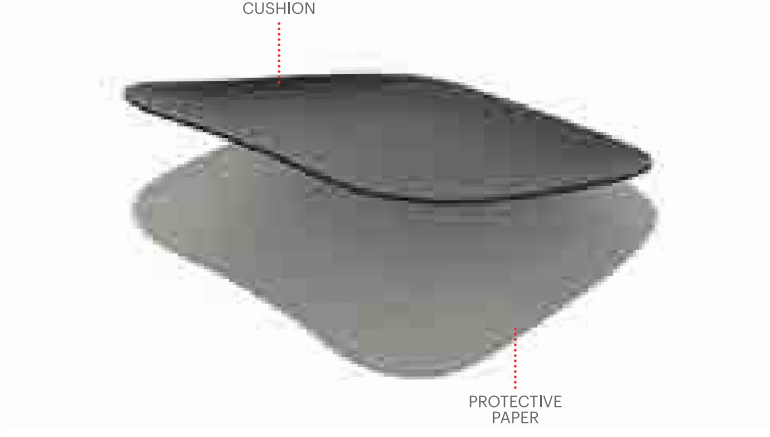

• CAREFULLY PLACE THE CUSHION TO THE SEAT GLUE SIDE DOWN.

• MAKE SURE CUSHION IS SECURELY ATTACHED TO THE SEAT.

1.3 Inserting the Brackets

- INSERT RIGHT BRACKET INTO RIGHT SIDE OF THE REAR HORIZONTAL AXIS.
- SCREW BRACKET IN PLACE USING BOLT AND WASHER.
- INSERT LEFT BRACKET INTO LEFT SIDE OF THE REAR HORIZONTAL AXIS.
- SCREW BRACKET IN PLACE USING BOLT AND WASHER.

- MAKE SURE BRACKETS ARE SECURELY ATTACHED.

1.4 Attaching the Nose Cap

• SNAP NOSE CAP ONTO FRONT PLATE OF ALPHA L.
•SCREW NOSE CAP INTO PLACE VIA THE UNDERSIDE OF THE FRAME. (D1)

NOTE: DO NOT OVERTIGHTEN THE NOSE CAP. DOING SO MAY CAUSE THE NOSE CAP TO CRACK.

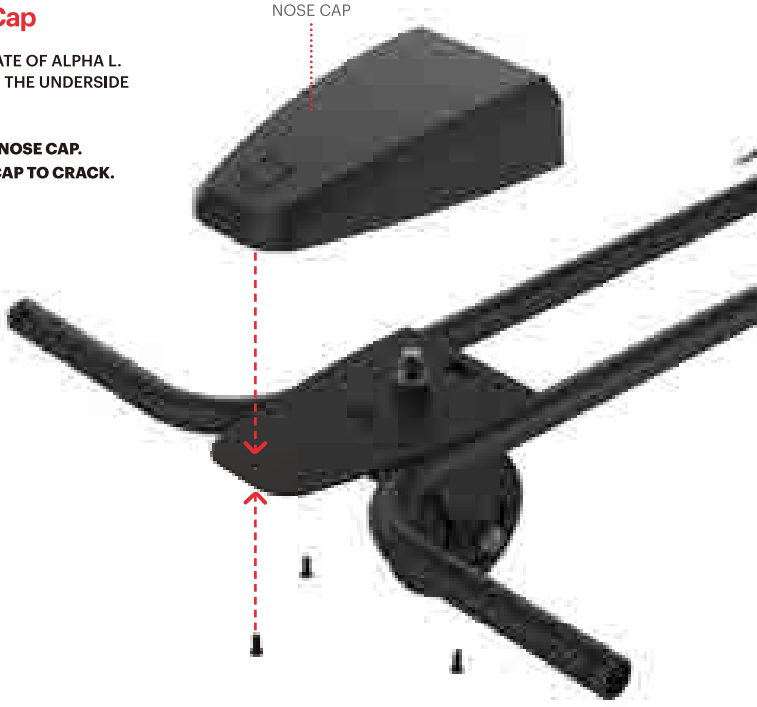

• MAKE SURE IT IS SECURELY ATTACHED.

1.5 Inserting the Footrests

- INSERT FOOTREST INTO EACH SIDE OF THE FRONT TUBE ON THE ALPHA L FRAME.
- ALIGN FOOTREST WITH SCREW HOLES ON THE FRONT TUBE.
- USING THE SMALL SCREW SUPPLIED, SCREW PEDALS IN PLACE. (D2)

• MAKE SURE FOOTREST ARE SECURELY IN PLACE.

1.6 Attaching the Hoverboard

• PLACE ALPHA L ON TOP OF HOVERBOARD. MAKE SURE HOVERBOARD IS TURNED OFF WHEN DOING THIS.

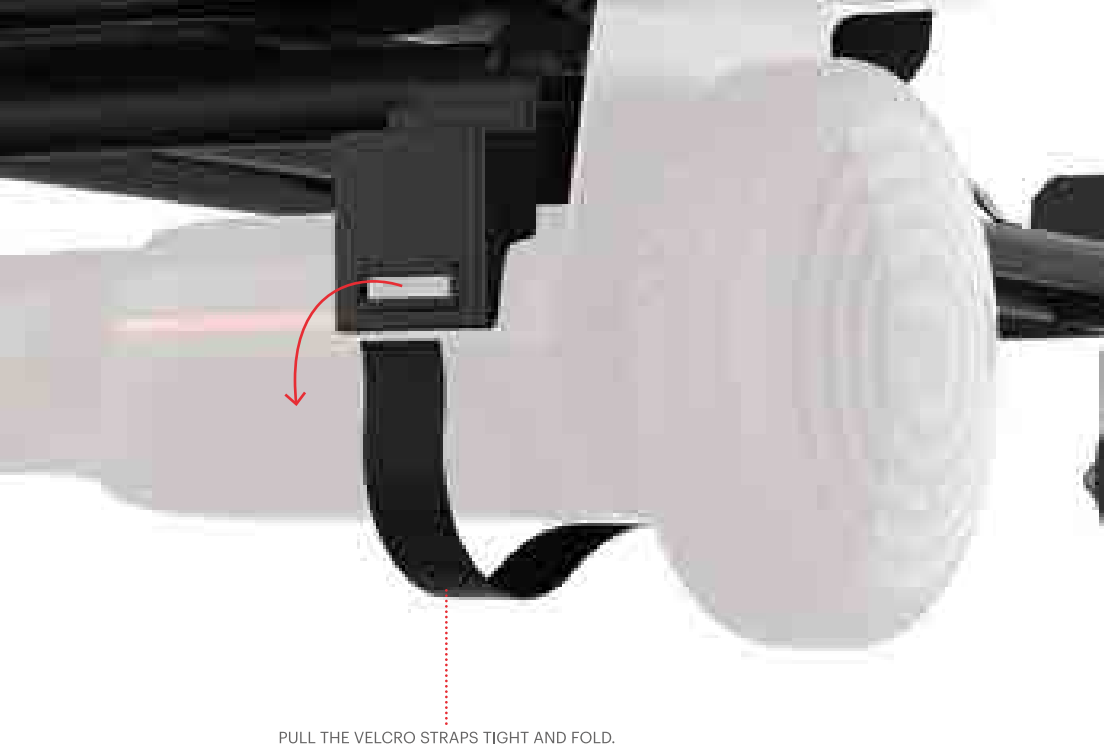

PULL THE VELCRO STRAPS TIGHT AND FOLD.

• MAKE SURE HOVERBOARD IS SECURELY IN PLACE.

1.7 Indicator Lights

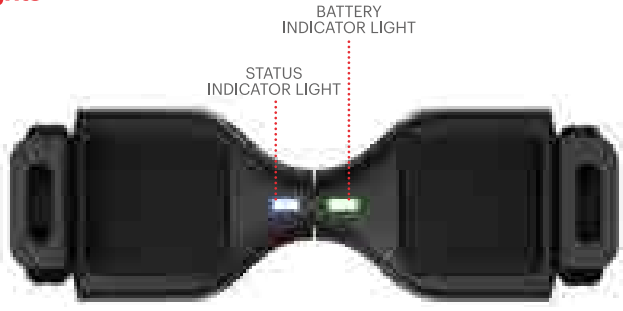

BATTERY INDICATOR LIGHT			
PERCENTAGE	< 20%	20-49%	50% +

WARNING: THE HOVERBOARD WILL AUTOMATICALLY SLOW DOWN AND LEAN UP ONCE THE BATTERY POWER GOES BELOW 10% AS A SAFETY PRECAUTION.

STATUS INDICATOR LIGHT		
STATUS	LIGHTS UP BLUE WHEN YOU STEP ON THE HOVERBOARD. READY TO RIDE.	RECALIBRATE YOUR HOVERBOARD.

1.8 Connecting to Bluetooth®

THE HOVERBOARD COMES EQUIPPED WITH A BLUETOOTH® SPEAKER.

TO CONNECT TO YOUR BLUETOOTH® SPEAKER:

- TURN ON THE HOVERBOARD, AND IT WILL BECOME DISCOVERABLE TO YOUR HANDHELD DEVICE.
- ACTIVATE YOUR BLUETOOTH® IN YOUR HANDHELD DEVICE'S SETTINGS.
- FIND THE HOVERBOARD IN YOUR HANDHELD DEVICE'S LIST AND SELECT IT.
- NOW YOU CAN PLAY YOUR MUSIC.

Warning: Changes or modifications to this unit not expressly approved by theparty responsible for compliance could void the user's authority to operate the equipment.

NOTE: This equipment has been tested and found to comply with the limits for a Class B digital device, pursuant to Part 15 of the FCC Rules. These limits are designed to provide reasonable protection against harmful interference in a residential installation. This equipment generates, uses and can radiate radio frequency energy and, if not installed and used in accordance with the instructions, may cause harmful interference to radio communications. However, there is no guarantee that interference will not occur in a particular installation. If this equipment does cause harmful interference to radio or television reception, which can be determined by turning the equipment off and on, the user is encouraged to try to correct the interference by one or more of the following measures:

- **Reorient or relocate the receiving antenna.**
- **Increase the separation between the equipment and receiver.**
- **Connect the equipment into an outlet on a circuit different from that to which the receiver is connected.**
- **Consult the dealer or an experienced radio/TV technician for help**

THE BLUETOOTH® WORD MARK AND LOGOS ARE REGISTERED TRADEMARKS OWNED BY THE BLUETOOTH SIG, INC. AND ANY USE OF SUCH MARKS BY JETSON ELECTRIC BIKE LLC. IS UNDER LICENSE. OTHER TRADEMARKS AND TRADE NAMES ARE THOSE OF THEIR RESPECTIVE OWNERS.

1.9 Recalibrating the Hoverboard

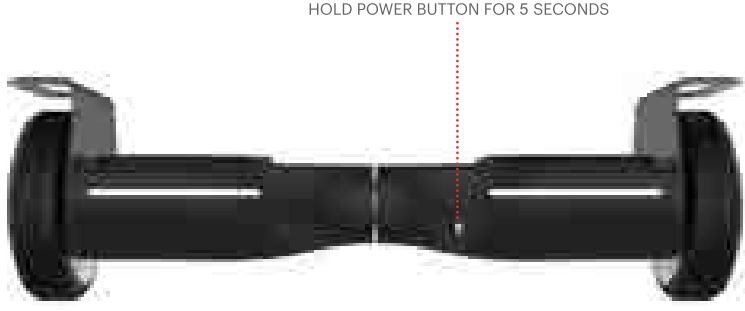

• PLACE POWERED OFF HOVERBOARD ON A FLAT SURFACE. HOLD THE POWER BUTTON FOR 5 SECONDS UNTIL TUNE IS COMPLETED.
• LET GO OF POWER BUTTON AND THEN PRESS IT AGAIN TO TURN HOVERBOARD OFF.
• TURN HOVERBOARD BACK ON; RECALIBRATION IS NOW COMPLETE.

* KEEP THE HOVERBOARD LEVELED AND STILL THROUGHOUT RECALIBRATION PROCESS.

1.10 Turning the Lights On

• CONNECT THE REAR SEAT WIRE TO THE HOVERBOARD'S CHARGING PORT.
• POWER ON THE HOVERBOARD – THE LIGHTS WILL TURN ON ONCE THE HOVERBOARD AND THE SEAT WIRE ARE PLUGGED IN.
• THE DEFAULT LIGHTING MODE WILL DISPLAY WHEN THE ALPHA L AND HOVERBOARD ARE BOTH CONNECTED AND POWERED ON.
• SHORT PRESS THE POWER BUTTON TO SWITCH BETWEEN DIFFERENT LIGHTING EFFECTS.

PLEASE NOTE: THE CONNECTOR SHOULD ALWAYS BE CONNECTED WHILE RIDING.

2. Make Moves

2.1 Getting on the Alpha L

- PLACE THE ALPHA L ON A FLAT SURFACE WITH THE HOVERBOARD TURNED OFF.
- CAREFULLY SIT IN ALPHA L PLACING YOUR FEET ON THE FOOTREST.
- MAKE SURE THE HOVERBOARD IS LEVELED.
- TURN ON HOVERBOARD.

NOTE: DO NOT TURN ON THE HOVERBOARD BEFORE YOU SIT DOWN. IF THE HOVERBOARD IS NOT LEVELED WHEN YOU TURN IT ON, THE ALPHA L WILL GO FORWARD OR BACKWARD IMMEDIATELY.

2.2 Now for the fun part. Riding the Alpha L.

NOTE: TIGHTEN ALL SCREWS AND LOCKING NUTS BEFORE EACH RIDE.

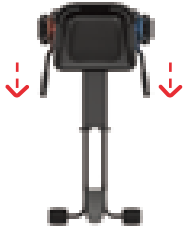

TO GO FORWARD - PUSH DOWN BOTH HANDLES

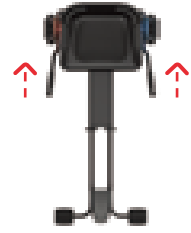

TO BRAKE / REVERSE - PULL UP BOTH HANDLES

TO TURN RIGHT – PUSH DOWN LEFT HANDLE,
PULL UP RIGHT HANDLE

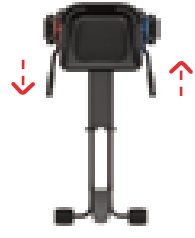

TO TURN LEFT – PULL UP LEFT HANDLE,
PUSH DOWN RIGHT HANDLE

2.3 Riding the Hoverboard

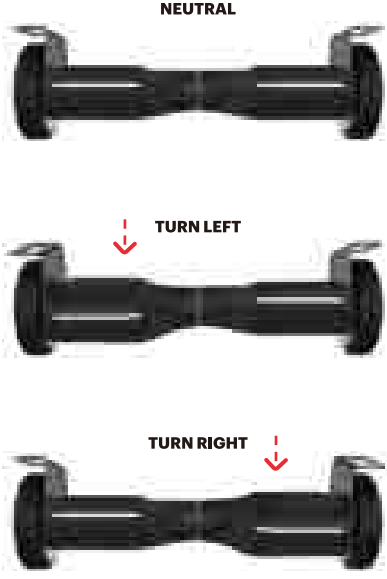

Care & Maintenance

CLEANING THE ALPHA L

TO CLEAN THE ALPHA L, CAREFULLY WIPE WITH A DAMP CLOTH, THEN DRY WITH A DRY CLOTH. DO NOT USE WATER TO CLEAN THE ALPHA L, THIS MAY DAMAGE THE FRAME OR SEAT.

STORAGE

- STORE THE ALPHA L INDOORS IN A DRY PLACE.
- COVER THE ALPHA L TO PROTECT AGAINST DUST.

FEW MUST-DO'S

- KEEP AWAY FROM FIRE AND EXCESSIVE HEAT.
- AVOID INTENSE PHYSICAL SHOCK, SEVERE VIBRATION, OR IMPACT.
- PLEASE RIDE THE ALPHA L ON A SMOOTH, FLAT SURFACE.
- PROTECT FROM WATER OR MOISTURE.
- CONTACT JETSON CUSTOMER CARE IF THERE ARE ANY ISSUES WITH THE ALPHA L.

Enjoying the ride?

Leave a review on ridejetson.com/reviews or share your photos with us online using the #RideJetson hashtag!

Follow us **@ridejetson**

#MakeMoves

JETSON

Questions? Let us know.

support.ridejetson.com

Hours of Operation:
7 Days a Week, 10am-6pm

Imported by Jetson Electric Bikes LLC.
86 34th Street 4th Floor, Brooklyn, New York 11232

www.ridejetson.com

UL SNND CERTIFIED

Made in China
Date Code: 05/2021

JETSON

CONFIDENTIAL FILE INFORMATION
THIS PAGE NOT FOR PRINT

DATE: 04/12/2021
FILE NAME: Alpha-L-manual.indd
PAGE SIZE: L5.5” * H4.25” | L13.97cm * H10.795cm
BOOKLET FORMAT; SADDLE STICHED BINDING
BLEED: .125” on all sides

PRINTER SPECIFICATIONS

SCALE: 100%
MATERIALS:

- 250g C2S
- Printed double sided: 4C

PANTONE®
CMYK

CMYK
0 93 76 0

DO NOT PRINT COMMENT,SCORING OR DIELINES LAYERS!

Physical sample according to specs must be approved by JETSON Bike before proceeding to production.
COMMENTS (Internal reference only)
File created by Eitan Adika, Jangmu Lama & Angelina Zavilevich