DIMENSION
TECHNOLOGY

AutoGet WiFi

Intelligent Wireless Portable Fiber End Face Microscope

User Manual

Please read this manual thoroughly before use.
Properly keep this manual with the equipment
for future reference.

Introduction

Dear customer：

Thank you for choosingAUTOGETWIFIproduct. This product has high quality and excellent performance. To make full use of this product, please read this manual carefully before using. Whenever you have any questions, please contact us and we are happy to support.

Symbols

The following symbols are used for the important information in this manual.

prompt The notice andrestrictions in the process.

Attention

1. Any change of this manual will not do any notice. Please kindly understand.

2. As far as possible, the content of this manual is to maintain accurate. However , If it is found that there is no clear, erroneous or ambiguous content, please contact us.

Considerations about the product

1.Keep the face clean video microscope, no fat, no pollution.

2.Keep the handheld display clean, prevent TFT LCD screen by the sharp cut, or crushed by the weight.

3.Put it in suit box if longtime no use.

4.Please check the device before use, if you only have a lamp flashing that lights please charge before use.

Product Warranty

Warranty Term

We warrants that for a period of one (1) year from the Shipping Date, the product purchased by customer shall be free of defects in material and workmanship under normal authorized use consistent with the product instructions.

Warranty Content

In the event that we receives notice during the warranty period that any part does not conform to its warranty, our sole and exclusive liability shall be, at its sole option, to either repair or replace the non-conforming part in accordance with this limited warranty.

Warranty Exception

No warranty will apply if

1) Device damage caused by wrong operation;

2) Unconventional repair or modification;

3) The causes of failure outside of the instrument;

4) Used in high temperature and humidity, corrosive gas, harsh conditions such as vibration；

5) Fires, earthquakes and other natural disasters as well as the pollution caused by radioactive substances and harmful substances, and when the other force majeure such as war, riot, crime.

6) Consumables and consumable parts.

Structure OfThis Manual

1	**Profile**	This chapter describes the name and function of each part.
2	**Hardware basic operation**	This chapter describes performance characteristics and the basic operation of the equipment.
3	**Software basic operation**	This chapter introduces software installation, features, interface and basic operation instructions.
4	**Contact us**	This chapter mainly list the contact information.

CONTENTS

INTRODUCTION 1

PRODUCT WARRANTY 2

STRUCTURE OF THIS MANUAL 3

CONTENTS 4

1 PROFILE 6

1.1 CHECK THE PACKAGING 6
1.2 PRODUCT DESCRIPTION 6

2 HARDWARE BASIC OPERATION 9

2.1 FEATURES 9

2.2 PERFORMANCE 9

2.3 HARDWARE OPERATION 10
2.3.1 Power On/Off *10*
2.3.2 Remove the battery *10*
2.3.3 Handle angle adjustment *11*
2.3.4 Install WiFi module *12*
2.3.5Measurement *12*
2.3.6 Floodlight switch *13*
2.3.7Replace the adapter *13*

3 SOFTWARE BASIC FUNCTIONS 14

3.1 SOFTWARE INSTALLATION AND UPDATE 14

3.2 MOBILE TERMINAL INTERFACE 14
3.2.1 Main interface 14
3.3.2 15
Measurement task setting 15
3.3.3 Device Settings 16
3.3.4 About 16
3.4 MOBILE TERMINAL SOFTWARE OPERATION INSTRUCTIONS 17
3.4.1 Measurement 17
3.4.2 Layer 17
3.4.3 Image magnification and reduction 18
3.4.4 File view 18
4CONTACT US 20

1 Profile

1.1 Check the packaging

Check whether include the following parts. We very carefully delivered of each package, such as found missing, Please contact our after-sales staff.

According to the packing list of the products, please check whether all items contained, if there are any missing items, please according to provide the way to contact us.

1.2 Product description

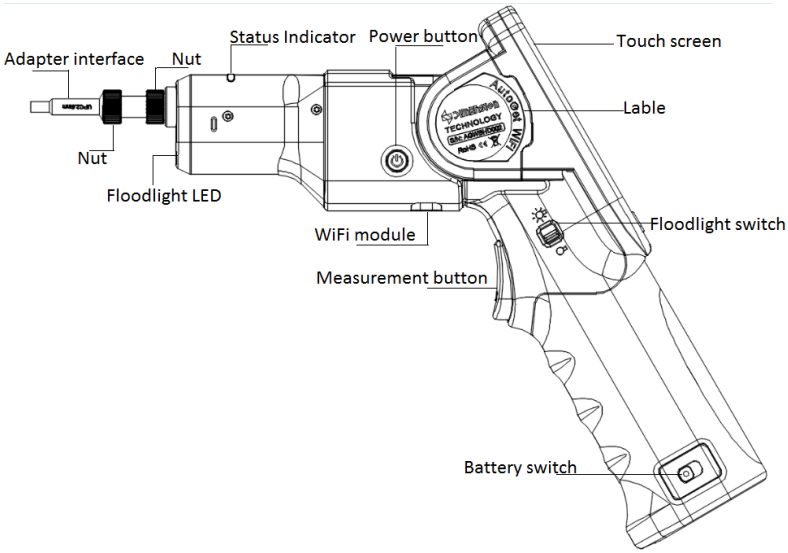

Figure 1- 1

Adapter interface: connect different connector.

Nut: Fixed interface.

Floodlight LED:Conducive to the operation of various environments.

Status Indicator:Indicates the status of the device. The operating status is blue. If the measurement passes, it is green, if the measurement fails, it is red.

Power button:Switch need long press power button.

Touch screen: Display image and software operation interface.

Label: Indicates important information about the product.

WiFi module:Support wireless transmission.

Floodlight switch: Used for control lighting.

Measurement button:Trigger measurement.

Battery switch:For battery removal.

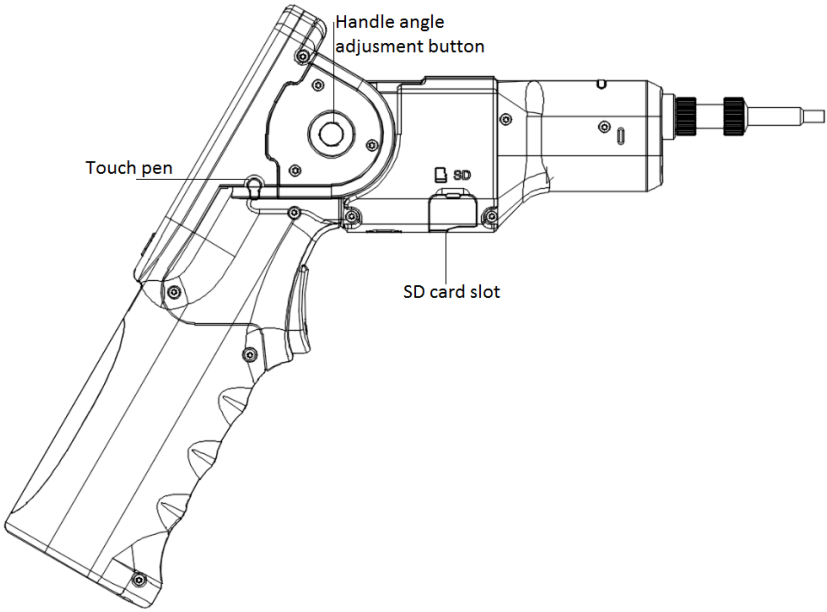

Figure 1- 2

Touch pen:For touch screens.

Handle angle adjustment button:

SD card slot:Install SD card to store data and reports.

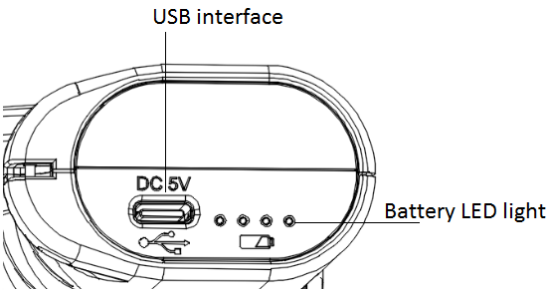

Figure 1- 3

USB interface:The battery can be charged using the supplied USB cable and the adapter.

Battery LEDlight:Displays the battery power and the storage status during the charging process.

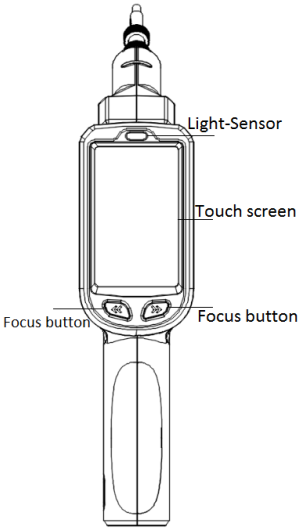

Figure 1-4

Light-Sensor:The screen brightness can be adjusted according to the ambient light intensity.

Touch screen:Display image and software operation interface.

Focus button:Manual focus button.

2 Hardware basic operation

2.1 Features

1.Varies of adapters meet different requirements on inspect male fiber connectorfemale fiber connector, such as FC SC ST E2000 LCMU and TOSA ROSA fiber end-face.

2.AutoGetWiFihas high quality optical component and high resolution CCD sensor.

3.Support SD card storage.

4. Equipped with a dedicated rechargeable battery, a charge can work continuously for more than 5 hours.

5. User-friendly design, the use of lighting in the dark when the use of more convenient light; the use of protective cover in the use of transport process, the equipment interface to protect and prevent dust fall.

6.The device is equipped with a quick measurement button function, which can record the measurement of the optical fiber end face at any time by data and report and store it on the SD card.

2.2 Performance

parameter	performance
Optical magnification	8.72X
Visual range	480μm*480μm
Focus Mode	Manual/Auto
Power consumption	2.5W
working temperature	-20℃~+60℃
Storage Temperature	-20℃~+50℃
Communication interface	2.4G-WiFi 802.11b, g, n
power supply mode	Removable battery module
Power Adapter	DC 5V/2A
Charging time	4h
Usage time	More than 5h
Weight	565g
Size	281mm*201mm*57mm

2.3 Hardware operation

2.3.1 Power On/Off

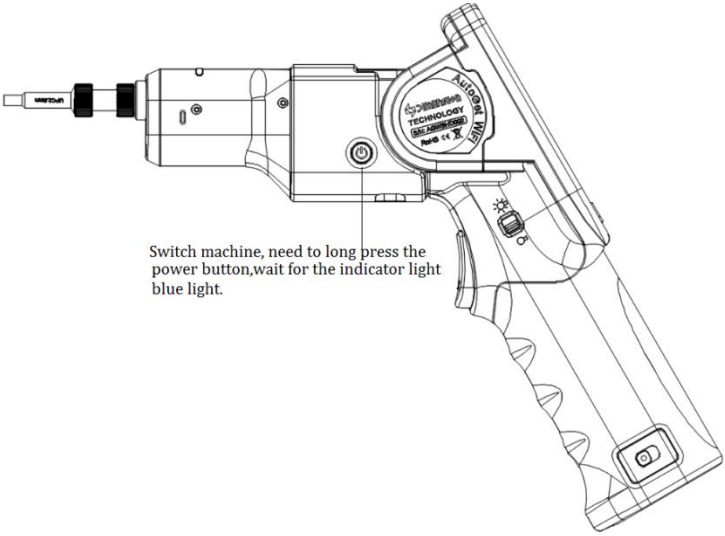

Figure 2- 1

2.3.2 Remove the battery

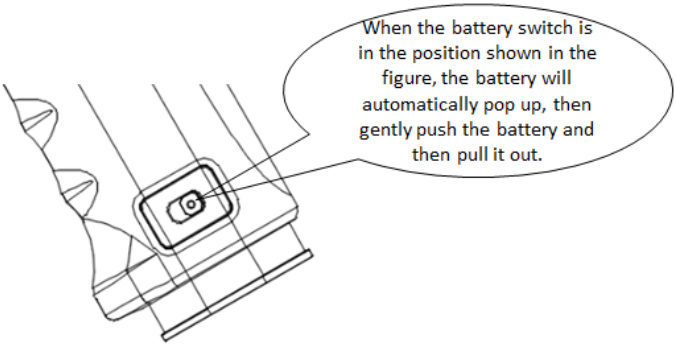

Figure 2- 2

NOTE:

1. Use a power supply to charge during the shutdown state of the device, and it will take about 4 hours to charge.

2. When the low light of the power indicator is flashing, the equipment needs to be charged, otherwise, the equipment will be automatically cut off after a certain time. In order not to affect the performance of the equipment and normal use, please charge in time.

4. In the charging process, the power indicator will be in sequence: the four indicators will blink in sequence. The four lights are always bright and the battery is full.

2.3.3 Handle angle adjustment

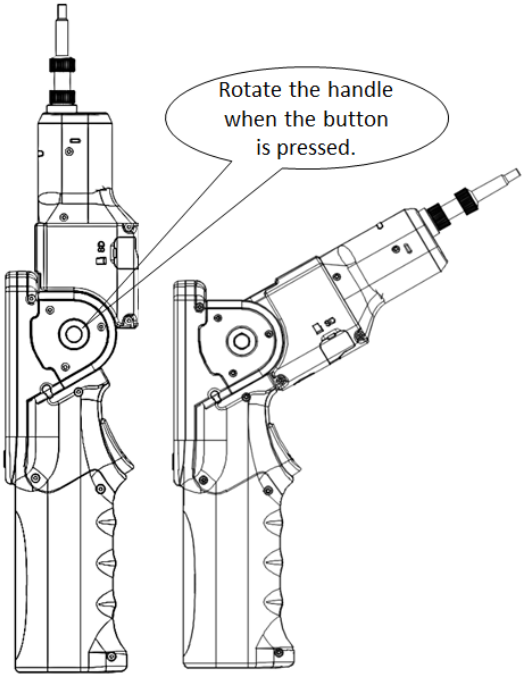

Figure 2- 3

2.3.4 Install WiFi module

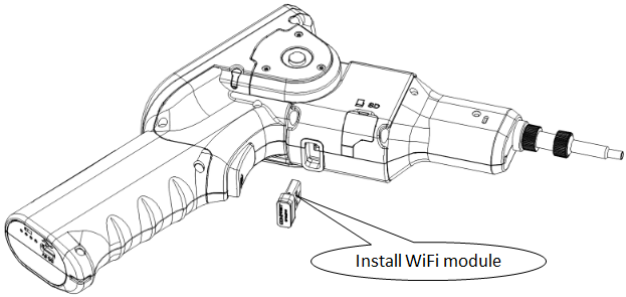

Figure 2- 4

Note:The wifi module is a custom module, single module cannot work. Can only be used after being paired with the product.

2.3.5Measurement

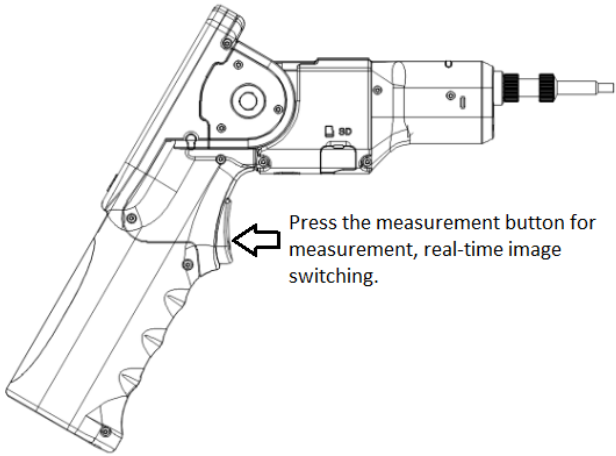

Figure 2- 5

2.3.6Floodlight switch

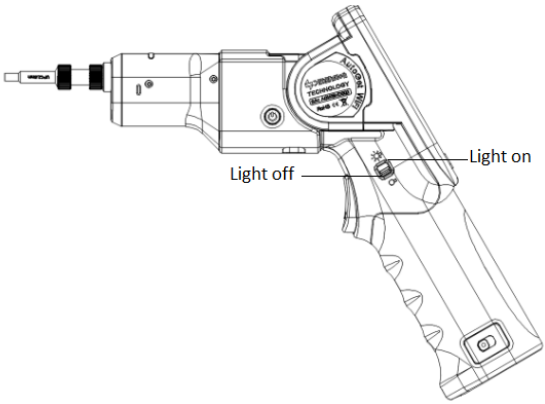

Figure 2- 6

Turn on the light switch to illuminate when the outside light is dark.

2.3.7Replace the adapter

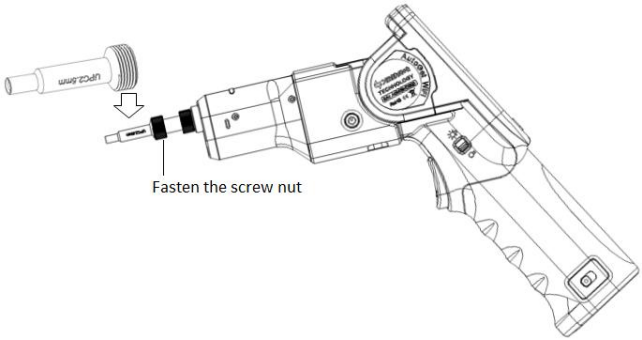

Figure 2- 7

Replace the adapter:

1.Loosen the lock nut of the adapter.

2. Remove the adapter.

3. Insert a new adapter.

4. Groove alignment.

5. Re-tighten the lock nut

3 Software basic functions

3.1 Software installation and update

1. Copy the software that needs to be updated to the AUTOGETWIFI device SD card, and then install the SD card to the AUTOGETWIFI device card slot.

2. Start the AUTOGETWIFI device and enter the Software Settings - About interface, click Upgrade. After the upgrade is complete, it prompts you to restart the device.

Note:

1. If there is no updateable software in the SD card, the system will prompt "No upgradeable version found inSDCard"

3.2Mobile terminal interface

3.2.1 Main interface

AutoGetWiFi power on,Enter the software main interface.

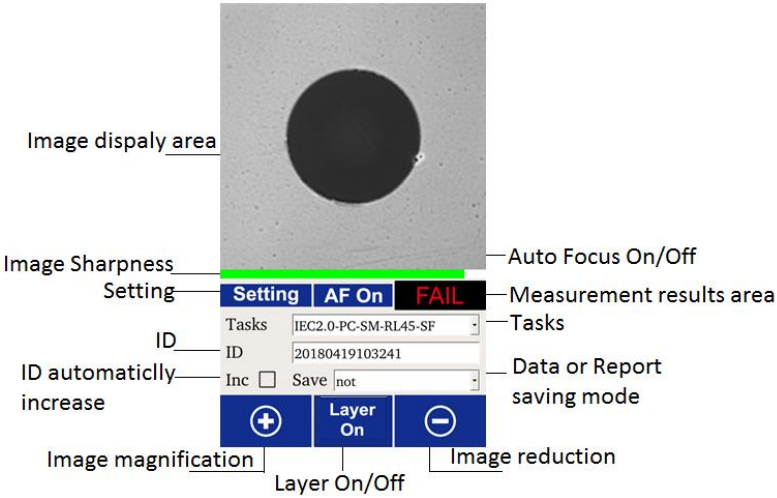

Figure 3- 1 Main interface

Image display area: Display real-time images, measurement results.

Image sharpness:The progress bar green indicates that the image is in a clear state.

Setting: Software system settings and measurement task settings.

ID: ID number.

INC☐:ID automaticallyincrease.

AF On: Auto focus switch.

Measurement results area: PASS or FAIL.

Task:Measurement task, optional.

Save: Data or report saving mode.

+:Image magnification.

_: Image reduction.

Layer on:Can switch Layer Off.

3.3.2Measurement task setting

Click “Setting” on the interface to enter the measurement task setting interface as follows:

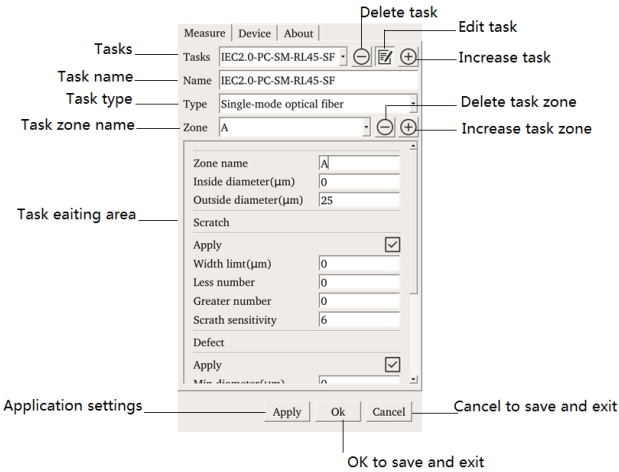

Figure 3- 2

Note: The default measurement task cannot be deleted or modified.

3.3.3 DeviceSettings

Click “Setting - Device” on the interface to enter the device setting interface as follows:

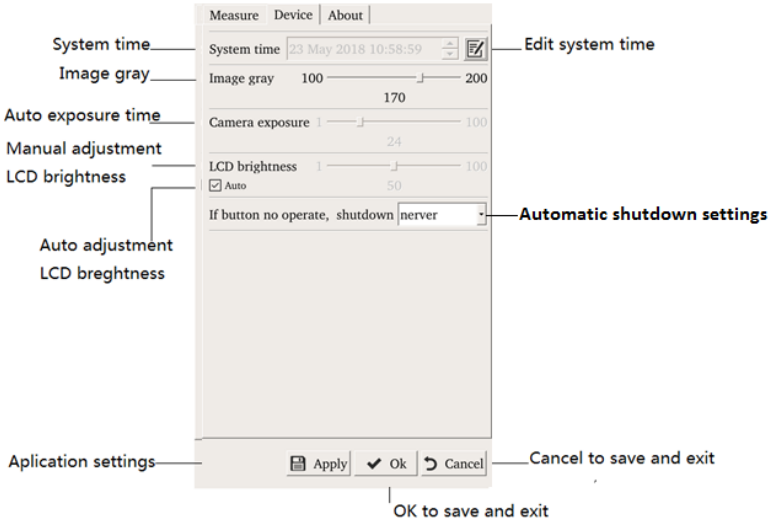

Figure 3- 3

3.3.4 About

Click “Setting - About” on the interface to enter the about interface as follows:

Figure 3- 4

Note:

It is necessary to restart the device after restoring factory settings and switching languages.

3.4 Mobile terminal software operation instructions

3.4.1 Measurement

In the real-time image display state, press the device measurement button to measure. After the measurement is completed, the measurement result is displayed. Press the measurement button again to display the real-time image.

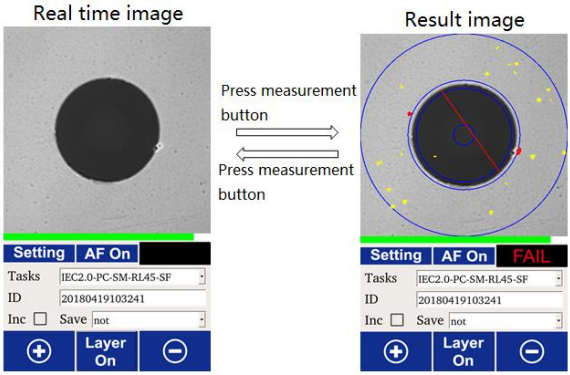

Figure 3- 5

3.4.2 Layer

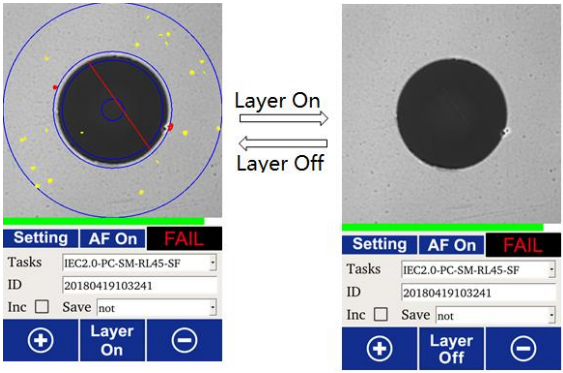

Figure 3- 6

3.4.3 Image magnification and reduction

Figure 3- 7

3.4.4 File view

The storage file format is: data and report, saved in the device SD card.

The file storage method is:

1. Not
2. Data
3. Report
4. Data and report

Data file:

DIMENSION AutogetWifi Inspector

ID	Description	Pass/ Fail	Zone A		Zone B		Zone C		Zone D		Test Task	Operator	Date	Time
			Defects	Scratches	Defects	Scratches	Defects	Scratches	Defects	Scratches				
7	Test	PASS	0	2	0	0			0	0	MM-SF-Ver2009	Operator	2018/7/6	16:33:29
8	Test	PASS	0	2	0	0			0	0	MM-SF-Ver2009	Operator	2018/7/6	16:33:35
9	Test	PASS	0	0	0	2			0	0	SM_RL_26-SF-Ver2009	Operator	2018/7/6	16:33:42

Figure 3- 8

Report file:

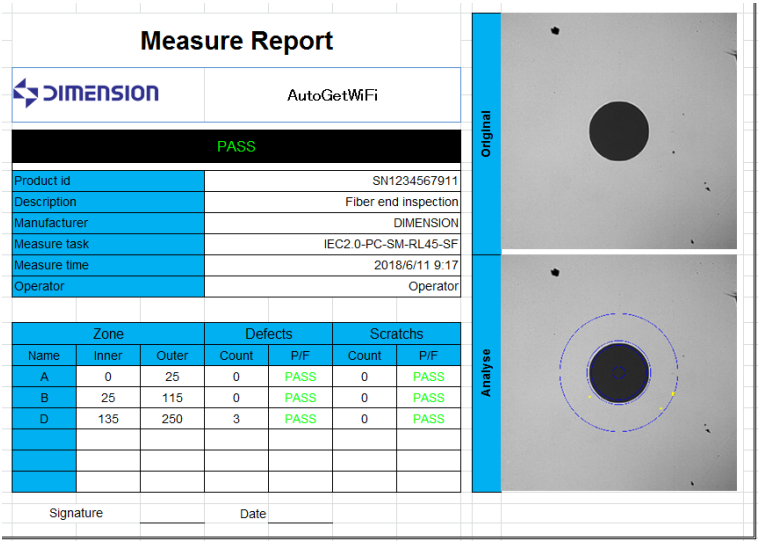

Measure Report

DIMENSION AutoGetWiFi

PASS

Product id	SN1234567911
Description	Fiber end inspection
Manufacturer	DIMENSION
Measure task	IEC2.0-PC-SM-RL45-SF
Measure time	2018/6/11 9:17
Operator	Operator

Zone			Defects		Scratchs	
Name	Inner	Outer	Count	P/F	Count	P/F
A	0	25	0	PASS	0	PASS
B	25	115	0	PASS	0	PASS
D	135	250	3	PASS	0	PASS

Signature _____ Date _____

Original

Analyse

Figure 3- 9

4 Contact us

If you have any further problem, please contact Dimension Technology Co., Ltd

Tel:+86 755-26480850

Fax:+86 755-26480895-0

E-mail:

Sales consultant: sales@weidujs.com

After-sales service: servers@weidujs.com

Technical support: support@weidujs.com

Web Url:www.weidujs.com

Address: 3F,Minlida industrial park, Hong hua ling industrial zone, Liuxian Blvd, Xili town, Nan shan district, Shenzhen, China

East China office

Tel: +86 21-36532952

Fax: +86 21-36532952

Address: Shanghai putuo district peach pu road306,room 1809

South West China Office

Telephone:+86 28-83198070

Fax:+86 755-26480895-0

Address:4F,Derun science and Technology Park,No.2 Xingsheng West Road,Jinniu Distrist,Chengdu ,China

FCC Caution:

This device complies with part 15 of the FCC Rules. Operation is subject to the following two conditions: (1) This device may not cause harmful interference, and (2) this device must accept any interference received, including interference that may cause undesired operation.

Any Changes or modifications not expressly approved by the party responsible for compliance could void the user's authority to operate the equipment.

Note: This equipment has been tested and found to comply with the limits for a Class B digital device, pursuant to part 15 of the FCC Rules. These limits are designed to provide reasonable protection against harmful interference in a residential installation. This equipment generates uses and can radiate radio frequency energy and, if not installed and used in accordance with the instructions, may cause harmful interference to radio communications. However, there is no guarantee that interference will not occur in a particular installation. If this equipment does cause harmful interference to radio or television reception, which can be determined by turning the equipment off and on, the user is encouraged to try to correct the interference by one or more of the following measures:

-Reorient or relocate the receiving antenna.

-Increase the separation between the equipment and receiver.

-Connect the equipment into an outlet on a circuit different from that to which the receiver is connected.

-Consult the dealer or an experienced radio/TV technician for help.

The device has been evaluated to meet general RF exposure requirement. The device can be used in portable exposure condition without restriction.