PRODUCT SPECIFICATION

Version 1.0

IEEE 802.11 b/g/n 2T2R USB Module

Model Number:W2HM2001

(Ralink MT7603U)

Custom Approval Section		
Custom Name		
Department		
Approval		Date:

DESIGN	CHECK	APPROVAL

SUMEC YANGZHOU INTERNATIONAL CO., LTD.

125, South Daxue Road, Yangzhou, Jiangsu, China
TEL:+86 025-58638441
E-mail: zhouqiuping@sumec.com.cn

Document revision history

Rev.	Date	Author	Reason for Changes
Version 1.0	2017/3/8		Initial

1. General Description

W2HM2001 is to specify the product requirements for 802.11b/g/n USB Module. This Card is based on Ralink MT7603U chipset that complied with IEEE 802.11n,and it is also backward complied with IEEE 802.11b/g standard from 2.4~2.5GHz.It can be used to provide up to 54Mbps for IEEE 802.11g, 11Mbps for IEEE 802.11b and 300Mbps for IEEE 802.11n to connect your wireless LAN.

With seamless roaming, fully interoperability and advanced security with WEP standard, 802.11b/g/n USB Module offers absolute interoperability with different vendors 802.11b/g/n Access Points through the wireless LAN.

2. Features

a) Compatible with IEEE 802.11b standard to provide wireless 11Mbps data rate.
b)

c) Compatible with IEEE 802.11g standard to provide wireless 54Mbps data rate.

d) Compatible with IEEE 802.11n standard to provide wireless 300Mbps data rate.

e) Operation at 2.4~2.5GHz frequency band to meet worldwide regulations

f) Supports WEP,802.1x,WPA and WPA2 enhanced security

g) Friendly user configuration and diagnostic utilities

h) Drivers support Windows XP,Win7

i) High speed USB 2.0 interface

j) ROHS compliant

3. Application Diagrams

3.1 Functional Block Diagram

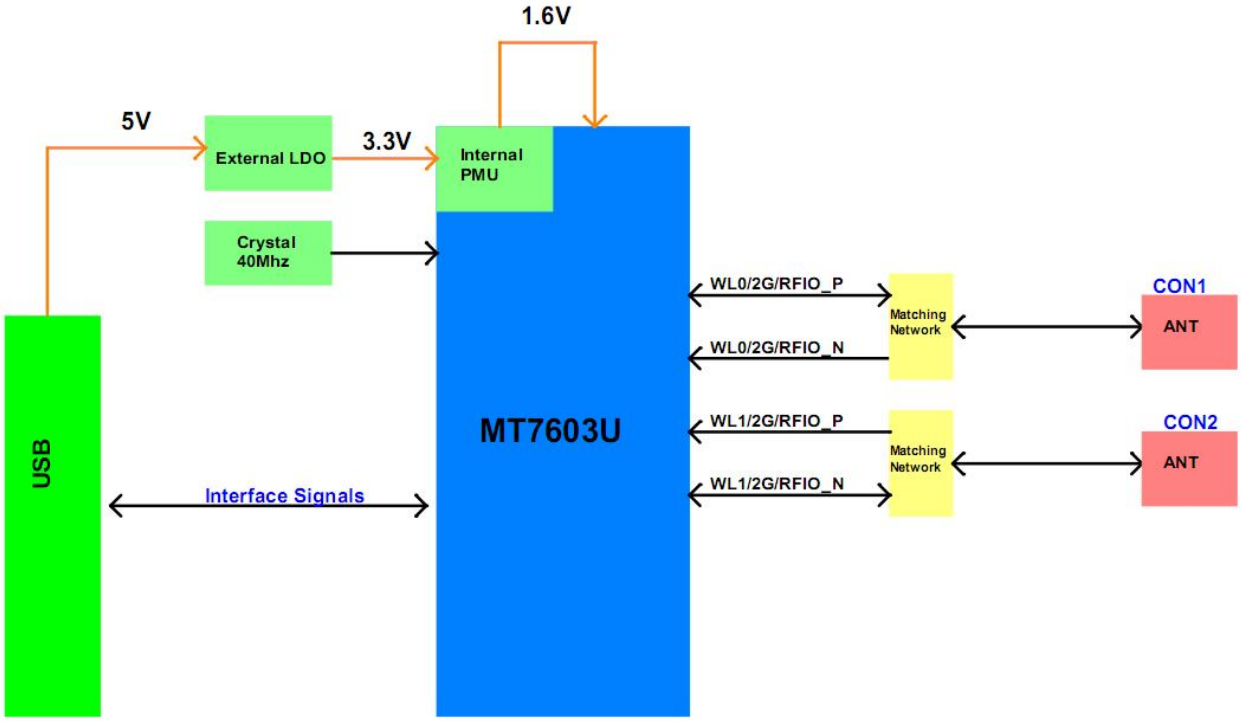

Figure 1

3.2 General Requirements

3.2.1 IEEE 802.11b Section

	Feature	Detailed Description
3.2.1.1	Standard	• IEEE 802.11b
3.2.1.2	Radio and Modulation Schemes	• DQPSK , DBPSK , DSSS , and CCK
3.2.1.3	Operating Frequency	• 2400 ～ 2497MHz ISM band
3.2.1.4	Channel Numbers	• 11 channels for United States • 13 channels for Europe Countries • 14 channels for Japan
3.2.1.5	Data Rate	• 11,5.5,2,and 1Mbps
3.2.1.6	Media Access Protocol	• CSMA/CA with ACK

3.2.1.7	Receiver Sensitivity at Antenna Connector	• Typical Sensitivity at Which Frame(1000-byte PDUs)Error Rate=8% • -76 dBm at 2Mbps • -76 dBm for 11Mbps

3.2.2 IEEE 802.11g Section

	Feature	Detailed Description
3.2.2.1	Standard	• IEEE 802.11g
3.2.2.2	Radio and Modulation Type	• QPSK , BPSK , 16QAM ,64QAM with OFDM
3.2.2.3	Operating Frequency	• 2400 ～ 2483.5MHz ISM band
3.2.2.4	Channel Numbers	• 11 channels for United States • 13 channels for Europe Countries • 13 channels for Japan
3.2.2.5	Data Rate	• 6, 9, 12, 18, 24, 36, 48, 54Mbps
3.2.2.6	Media Access Protocol	• CSMA/CA with ACK
3.2.2.7	at Antenna Connector	• Typical Sensitivity at each RF chain. Frame(1000-byte PDUs)Error Rate<10% at room Temp 25 degree C • -82 dBm at 6Mbps • -81 dBm at 9Mbps • -79 dBm at 12Mbps • -77 dBm at 18Mbps • -74 dBm at 24Mbps • -70 dBm at 36Mbps • -66 dBm at 48Mbps • -65 dBm at 54Mbps

3.2.3 IEEE 802.11n Section

	Feature	Detailed Description
3.2.3.1	Standard	• IEEE 802.11n
3.2.3.2	Radio and Modulation Type	• BPSK , QPSK , 16QAM ,64QAM with OFDM
3.2.3.3	Operating Frequency	• 2400 ～ 2483.5MHz
3.2.3.4	Data Rate(Mbps)	

MCS	GI=800ns		GI=800ns	
	20MHz	40MH	20MHz	40MHz
0	6.5	13.5	7.2	15
1	13	27	14.4	30
2	19.5	40.5	21.7	45
3	26	54	28.9	60
4	39	81	43.3	90
5	52	108	57.8	120
6	58.5	121.5	65.0	135
7	65	135	72.2	150
8	13	27	14.444	30
9	26	54	28.889	60
10	39	81	43.333	90
11	52	108	57.778	120
12	78	162	86.667	180
13	104	216	115.556	240
14	117	243	130.000	170
15	130	270	144.444	300

3.2.3.5	Media Access Protocol	• CSMA/CA with ACK
3.2.3.6	at Antenna Connector	• Typical Sensitivity at Which Frame(1000-byte PDUs)Error Rate=10% and at roomTemp. 25degree C HT-20 • -82dBm at MCS0/8 • -79dBm at MCS1/9 • -77dBm at MCS2/10 • -74dBm at MCS3/11 • -70dBm at MCS4/12 • -66dBm at MCS5/13 • -65dBm at MCS6/14 • -64dBm at MCS7/15 HT-40 • -79dBm at MCS0/8 • -76dBm at MCS1/9 • -74dBm at MCS2/10 • -71dBm at MCS3/11 • -67dBm at MCS4/12 • -63dBm at MCS5/13 • -62dBm at MCS6/14 • -61dBm at MCS7/15

4. Electrical and Thermal Characteristics

4.1 Temperature Limit Ratings

Parameter	Minimum	Maximum	Units
Storage Temperature	-40	+80	°C
Ambient Operating Temperature	0	60	°C
Junction Temperature	0	125	°C

4.2 General Section

	Feature	Detailed Description
5.2.1	Antenna Type	● Integrated anterna
5.2.2	Operating Voltage	● 3.3V±10%
5.2.3	Current Consumption	● 350mA at continuous transmit mode ● 220mA at receive mode w/o receiving packet
5.2.4	USB	● High Speed USB2.0 Interface

4.3 Software Requirements

The Configuration Software supports Microsoft Windows 2000,xp32/64-bit and Vista 32/64-bit. This configuration software includes the follwwing functions:

- Information
  Information allows you to moniter network status.

- Configuration
  Configuration allows you to configure parameters for wireless networking.

- Encryption
  Encryption provides WEP,WPA,WPA2,and802.1X security control.

- Diagnosis
  Diagnosis allows you to display all channel status and search neighboring access points

4.3.1 Mechanical Requirements

	Feature	Detailed Description
4.3.2.1	Length	● 27mm(PCB)
4.3.2.2	Width	● 16.1mm(PCB)
4.3.2.3	Height	● 0.8mm(PCB)

5. Mechanical Dimensions

NO	Name	Description
1	WOW	Wake up
2	GND	Ground connected
3	UDP	USB positive differential data lines
4	UDM	USB negative different ial data lines
5	3.3V	Power supply 3.3V is required
6	RST_N	Reset
7	GND	Ground connected
8	RF0	WIFI –Ant0
9	GND	Ground connected
10	GND	Ground connected
11	RF1	WIFI –Ant1
12	GND	Ground connected

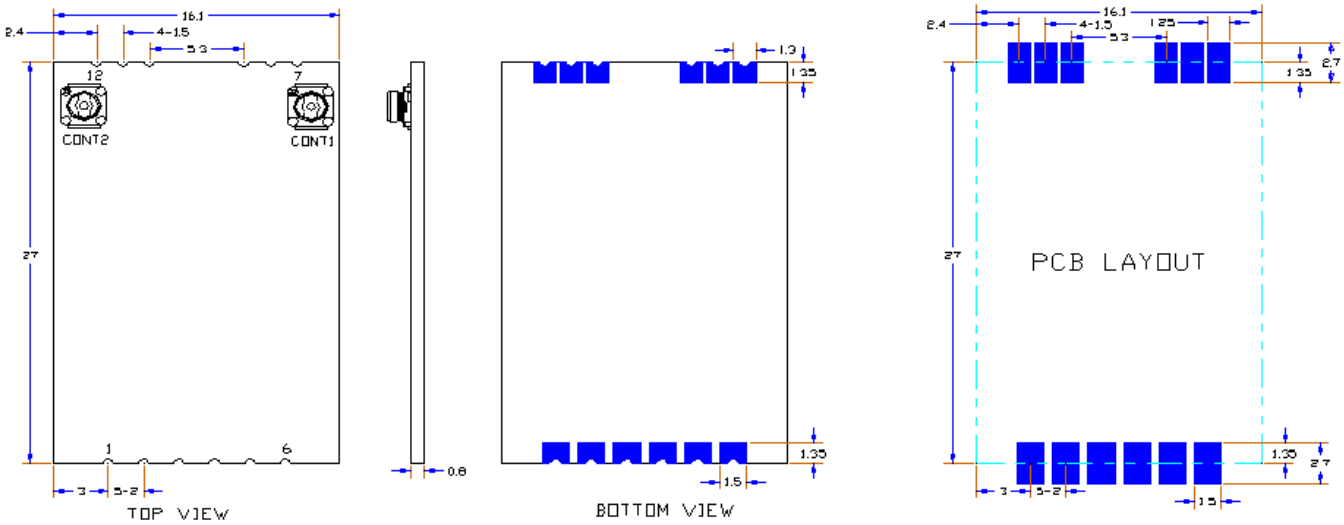

尺寸误差范围：

DIM (MM)	Tolerance (MM)
0-5	±0.15
5-10	±0.20
10-50	±0.30

6、包装方式：

托盘包装。

Appendix :

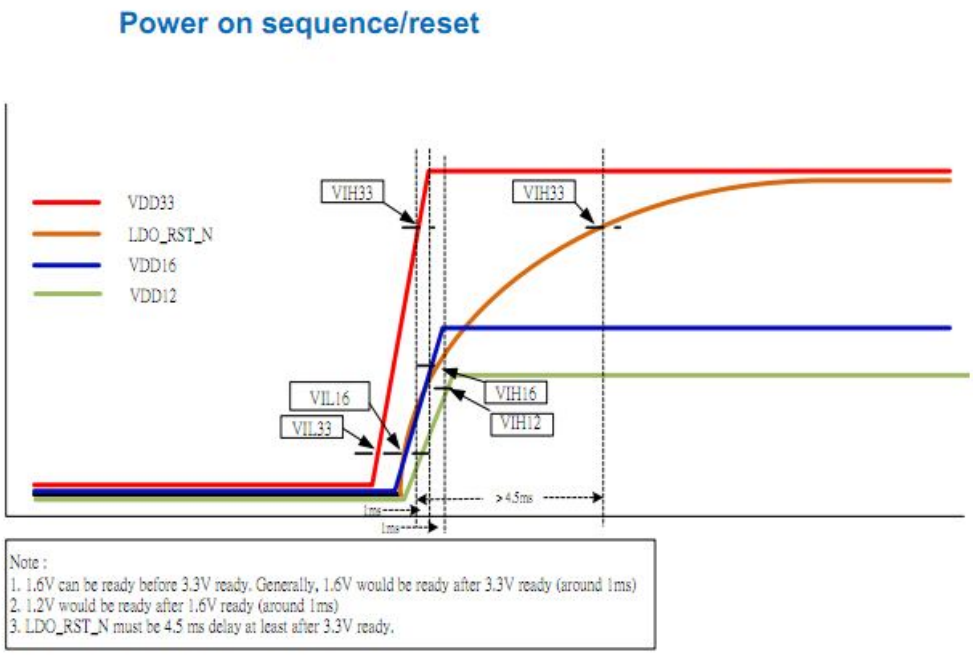

Appendix： 实物图片

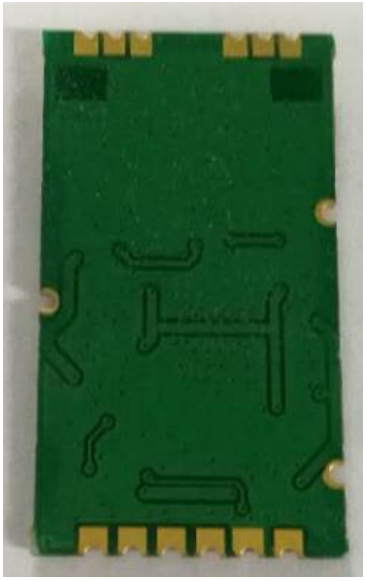

FCC ID:2AQN90001

This device complies with part 15 of the FCC Rules. Operation is subject to the following two conditions: (1) This device may not cause harmful interference, and (2) this device must accept any interference received, including interference that may cause undesired operation.

Caution: Changes or modifications to this unit not expressly approved by the party responsible for compliance could void the user's authority to operate the equipment.

NOTE: This equipment has been tested and found to comply with the limits for a Class B digital device, pursuant to part 15 of the FCC Rules. These limits are designed to provide reasonable protection against harmful interference in a residential installation. This equipment generates, uses and can radiate radio frequency energy and, if not installed and used in accordance with the instructions, may cause harmful interference to radio communications. However, there is no guarantee that interference will not occur in a particular installation. If this equipment does cause harmful interference to radio or television reception, which can be determined by turning the equipment off and on, the user is encouraged to try to correct the interference by one or more of the following measures:
—Reorient or relocate the receiving antenna.
—Increase the separation between the equipment and receiver.
—Connect the equipment into an outlet on a circuit different from that to which the receiver is connected.
—Consult the dealer or an experienced radio/TV technician for help.

To satisfy FCC RF exposure requirements, a separation distance of 20 cm or more should be maintained between the antenna of this device and persons during device operation.
To ensure compliance, operations at closer than this distance is not recommended

Information for the OEM Integrators
This device is intended for OEM integrators only. Please see the full grant of equipment document for restrictions.