7.

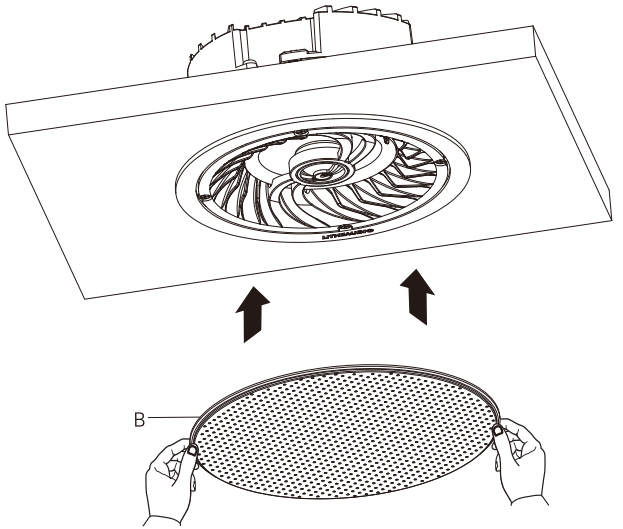

Ceiling Speaker

MP0128-03

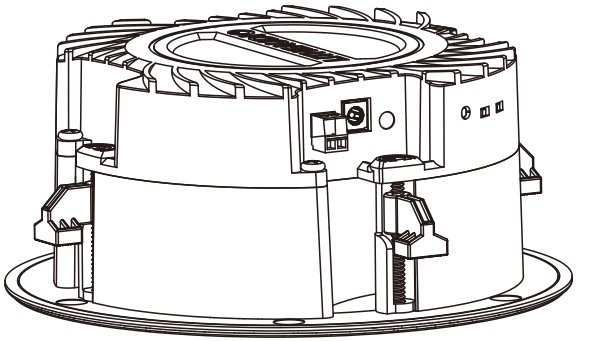

SAFETY INSTRUCTIONS

- Please read the instructions carefully before installation and use. Keep the manual safe for future reference.
- Prior to installing the speakers into any ceiling/wall, check the structure for weight bearing ability and avoid contact with any wiring or plumbing that might be behind the surface area. Installing on soft materials or in areas incapable of supporting the speakers' weight may cause personal injury or damage to the speaker.
- Make sure the speaker is properly secured to the ceiling/wall. Please use the proper screws, bolts, or anchors. Failure to do so may cause the speaker to become unsecured and cause potential damages/injuries.
- Damage to the woofer and tweeter may occur if the speaker is dropped or hit-resulting in no sound or distorted sound.
- Never overdrive your speakers to the point of distortion and always reduce volume prior to switching input sources.
- Use only approved and certified wiring in your installation, do not stretch or place the wire in contact with sharp objects.
- Prior to removing cables ensure all power to your speaker and other components is turned off.

PREPARATION

The hardware equipment listed below is needed to install the speaker.

Pencil

Phillips Screwdriver

Power Drill

Wire Stripper

Tape Measure

Safety Goggles

Stud Finder

Keyhole Saw/Cutting Saw

Ladder

PACKING LIST

Ensure that you have received all parts according to the component checklist prior to installation. If any parts are missing or faulty, contact your place of purchase for a replacement.

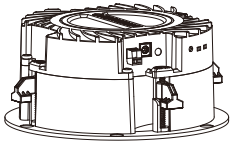
A (X1)

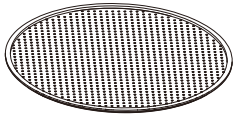
B (X1)

C (X1)

D (X1)

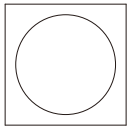
E (X1)

INSTALLATION

1.Cut the Speaker Hole

Use a stud finder to locate an area that is free of obstructions or studs. Position the cutout template where you are installing the speaker. Trace the template to mark out the speaker location with a pencil. Drill a pilot hole and cut all of the way around the circular outline with a cutting saw.

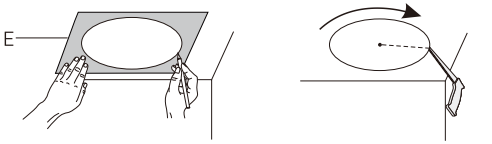

2.

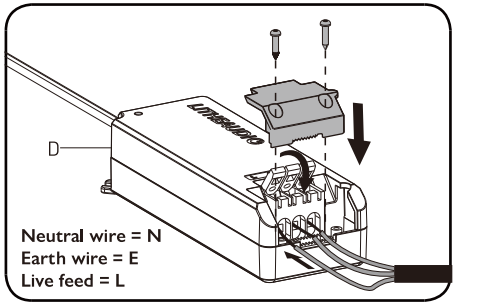

3.

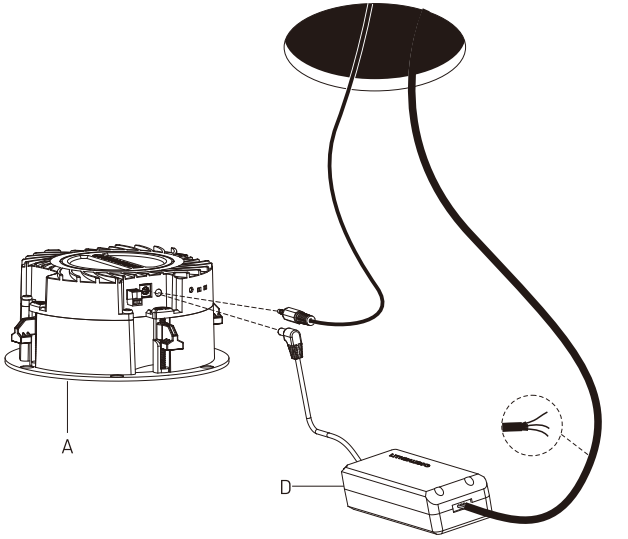

4.

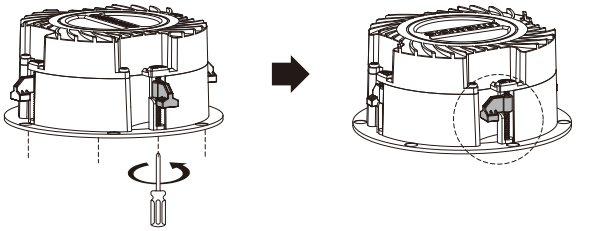

5.

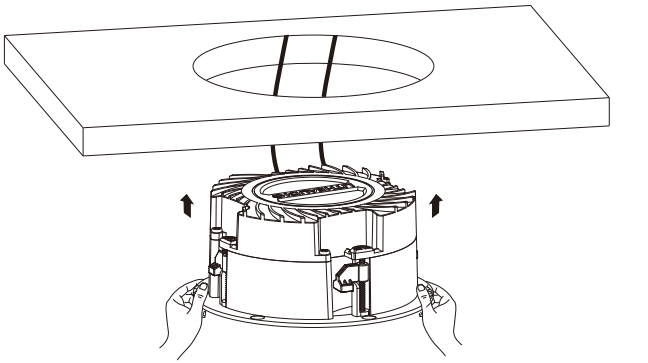

6.

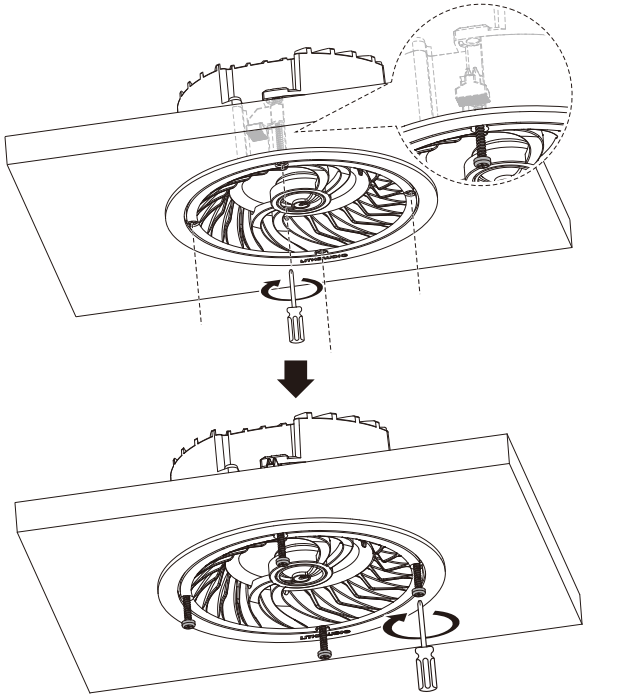

FCC Statement

This equipment has been tested and found to comply with the limits for a Class B digital device, pursuant to part 15 of the FCC Rules. These limits are designed to provide reasonable protection against harmful interference in a residential installation. This equipment generates, uses and can radiate radio frequency energy and, if not installed and used in accordance with the instructions, may cause harmful interference to radio communications. However, there is no guarantee that interference will not occur in a particular installation. If this equipment does cause harmful interference to radio or television reception, which can be determined by turning the equipment off and on, the user is encouraged to try to correct the interference by one or more of the following measures:

- Reorient or relocate the receiving antenna.
- Increase the separation between the equipment and receiver.
- Connect the equipment into an outlet on a circuit different from that to which the receiver is connected.
- Consult the dealer or an experienced radio/TV technician for help.

Caution: Any changes or modifications to this device not explicitly approved by manufacturer could void your authority to operate this equipment.

This device complies with part 15 of the FCC Rules. Operation is subject to the following two conditions: (1) This device may not cause harmful interference, and (2) this device must accept any interference received, including interference that may cause undesired operation.

Mobile

RF Exposure Information

This equipment complies with FCC radiation exposure limits set forth for an uncontrolled environment. This equipment should be installed and operated with minimum distance 20cm between the radiator and your body.