FLOUREON

FIT YOUR LIFESTYLE

FC100
TWO-WAY RADIO
User Manual

Features

- 9 Channels
- Up to 1.5km range
- 5 call tones for selection
- Call Roger Tone
- Keypad Tone
- Auto power off (1.5h)
- Keypad Lock
- Auto Squelch Control
- Battery Save
- Low Battery Alert
- TOT (time-out timer)
- Volume (0-7)

Turn Radio On and Off

1. Press and hold [⏻] key for 3 seconds to turn the radio on or off.
2. Upon power on, the radio chirps and briefly shows all feature icons available on the radio.
3. The display screen then shows the current channel, and all features that are enabled.

Keypad Control and Function

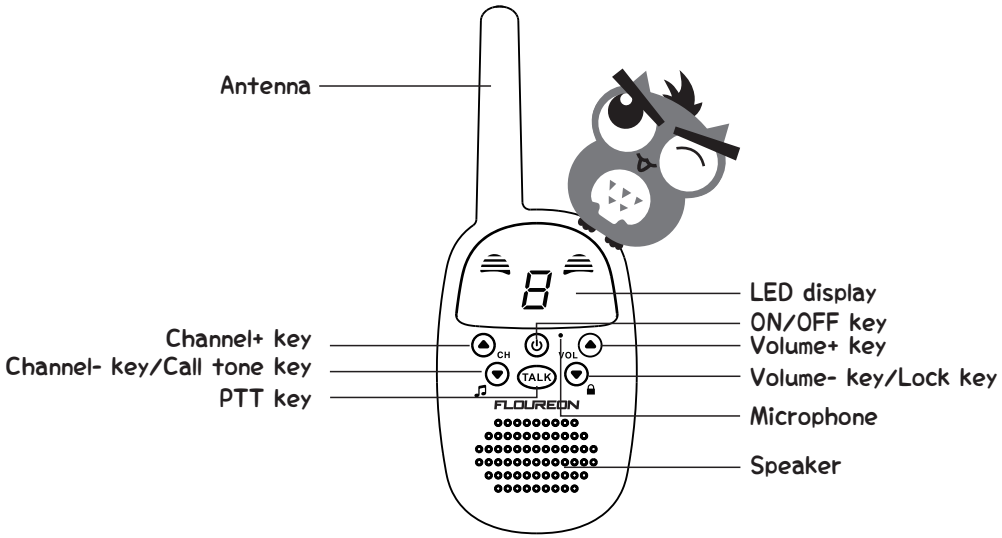

Note: LED only displays the channel

Installing the Batteries

1. Remove the battery cover.
2. Insert 3 AAA Alkaline Batteries with + and - polarity as shown inside.
3. Close the battery cover firmly.

Auto Power Off

If there is no responsein 1.5 hour, the radio will turn off automatically.

Setting the Volume

1. Press VOL[▲] key to increase the volume level.
2. Press VOL[▼/🔒] key to decrease the volume level or mute the speaker.

NOTE:
Do not hold the radio close to your ear, if the volume is set to uncomfortable level, it could hurt you hear.

Selecting the Channel

The channel is the frequency of radio uses to transmit.

1. Press CH [▲] key to increase the channel number.
2. Press CH [▼/♫]key to decrease the channel number.
3. The radio has 9 channels.

Talking and Listening

All radios in a group should set to the same channel.

1. Press and hold [Talk] key while s peaking.
2. Release [Talk] key, you can now receive the incoming calls.
3. For maximum clarity, hold the radio 2 to 3 cm away and avoid covering the microphone while talking.

Talk Range

Your radio is designed to maximize performance and improve transmission range.

NOTE:
Do not use the radio closer than five feet apart.

Talk Timeout Timer

To prevent accidental transmissions and save battery life, the radio emit a continuous warning tone and stops transmitting if you press the [Talk] key for 60 seconds continuously.

Setting and Transmitting Call Tones

Your radio can transmit different call tones to other radios in a group so you can alert them that you want to talk.

1. Press and hold CH[▼/♫]key for 2 seconds to transmit the call tone, press and hold CH[▼/♫]key for 2 seconds again to transmit the next call tone.
2. The radio has 5 call tones.

Roger Tone

Your radio transmit a unique tone when you finish transmitting, it is like saying "Roger" or "Over" to let others know you have finished talking.

Keypad Lock

To avoid accidentally change your radio settings.

1. If there is no response in 10 seconds, the radio will lock the keypad automatically.
2. You can also press and hold VOL [▼/🔒] key to lock or unlock the keypad manually.

Battery Save

Battery Save function works automatically to save battery life. Your radio is idle inactive for 5 seconds, it will enter battery save mode automatically. Under this mode, the walkie-talkie can receive incoming calls.

Low Battery Alert

When the battery power is low, the radio chirps periodically(Low Battery Alert). In battery low status, the radio will sound the alert every 5 minutes or after releasing the [Talk] key.

NOTE:
Remove the battery from radio for storage purposes.

Web: www.floureon.com
E-mail: support@floureon.com

Frequency Table

Frequency of America

Channel	Frequency	Channel	Frequency	Channel	Frequency
1	462.56250	4	462.63750	7	462.71250
2	462.58750	5	462.66250	8	467.56250
3	462.61250	6	462.68750	9	467.58750

FCC Statement

This device complies with Part 15 of the FCC Rules. Operation is subject to the following two conditions:

(1) This device may not cause harmful interference, and

(2) this device must accept any interference received, including interference that may cause undesired operation.

NOTE 1: This equipment has been tested and found to comply with the limits for a Class B digital device , pursuant to part 15 of the FCC Rules. These limits are designed to provide reasonable protection against harmful interference in a residential installation. This equipment generates, uses and can radiate radio frequency energy and, if not installed and used in accordance with the instructions, installed and used in accordance with the instructions, may cause harmful interference to radio communications. However, there is no guarantee that interference will not occur in a particular installation. If this equipment does cause harmful interference to radio or television reception, which can be determined by turning the equipment off and on, the user is encouraged to try to correct the interference by one or more of the following measures:

- Reorient or relocate the receiving antenna.
- Increase the separation between the equipment and receiver.
- Connect the equipment into an outlet on a circuit different from that to which the receiver is connected.
- Consult the dealer or an experienced radio/TV technician for help.

NOTE 2: Any changes or modifications to this unit not expressly approved by the party responsible for compliance could void the user's authority to operate the equipment.

SAR Warning

This transmitter may operate with the antenna(s) documented in this filing in Push-to-Talk and body-worn configurations. RF exposure compliance is limited to the specific belt-clip and accessory configurations as documented in this filing and the separation distance between user and the device or its antenna shall be at least 2.5 cm. All qualified end-users of this device must have the knowledge to control their exposure conditions and/or duration to comply with General Population / Uncontrolled Exposure limit and requirements. The highest reported SAR values for Face-held, body-worn conditions are 0.186 W/Kg, 0.330 W/Kg.

RF Specification	
Support Frequency Range:	462.5625MHz~ 462.7125MHz
	467.5625MHz~ 467.5875MHz
Rated Output Power:	0.5W
Modulation Type:	FM(Analog)
Emission Designator: *1	11K0F3E
Antenna Type:	Integral
Antenna Gain:	1.1dBi