LTA
Laboratory for Test & Approval Co.,Ltd.
243 Jubug-Ri,Yangji-Myeon, Yongin-Si, Gyeonggi-Do, Korea 17159
Tel: +82-31-323-6008 Fax: +82-31-323-6010
http://www.ltalab.com

Dates of Tests: June 10 ~ Dec 13, 2018
Test Report S/N: LR500111808A
Test Site : LTA CO., LTD.

CERTIFICATION OF COMPLIANCE

FCC ID. **2AQPIDDP150**

APPLICANT **DDPOPSTYLE Co.,Ltd.**

Equipment Class	:	**DCD - Low Power Transmitter Below 1705 kHz**
Manufacturing Description	:	**Wireless Power Charger**
Manufacturer	:	**DDPOPSTYLE Co.,Ltd.**
Model name	:	**DDP150**
Variant name	:	**LWC-Q01, DDPOP-QWC, S2B-QWC, OQWC18**
Test Device Serial No.:	:	**Identical prototype**
Rule Part(s)	:	**FCC Part 15.209 Subpart C ; ANSI C-63.4-2014**
Frequency Range	:	**115 kHz ~ 205 kHz**
Data of issue	:	**December 13, 2018**

This test report is issued under the authority of:

JaBeom.Koo

JaBeom, Koo / Manager

The test was supervised by:

HeeCheon Kwon, Test Engineer

This test result only responds to the tested sample. It is not allowed to copy this report even partly without the allowance of the test laboratory. The report must not be used by the client to claim product certification, approval, or endorsement by NVLAP, NIST, or any agency of the Federal Government.

NVLAP LAB Code.: 200723-0

Copyright © 2018, LTA Co., Ltd.

TABLE OF CONTENTS

1. GENERAL INFORMATION ---------- 3

2. INFORMATION ABOUT TEST ITEM ---------- 4

3. TEST REPORT ---------- 5

3.1 SUMMARY OF TESTS ---------- 5

3.2 TECHNICAL CHARACTERISTICS TEST ---------- 6

3.2.1 Antenna requirement ---------- 6

3.2.2 Spurious Emission ---------- 9

3.2.3 AC Conducted Emissions ---------- 10

3.2.4 Bandwidth Measurement ---------- 18

APPENDIX

APPENDIX TEST EQUIPMENT USED FOR TESTS ---------- 19

Copyright © 2018, LTA Co., Ltd.

1. General information

1-1 Test Performed

Company name : LTA Co., Ltd.
Address : 243, Jubug-ri,Yangji-Myeon,Youngin-Si, Kyunggi-Do, Korea. 17159
Web site : http://www.ltalab.com
E-mail : chahn@ltalab.com
Telephone : +82-31-323-6008
Facsimile +82-31-323-6010

Quality control in the testing laboratory is implemented as per ISO/IEC 17025 which is the "General requirements for the competents of calibration and testing laboratory".

1-2 Accredited agencies

LTA Co., Ltd. is approved to perform EMC testing by the following agencies:

Agency	Country	Accreditation No.	Validity	Reference
NVLAP	U.S.A	200723-0	2019-09-30	ECT accredited Lab.
RRA	KOREA	KR0049	-	EMC accredited Lab.
FCC	U.S.A	649054	2019-04-13	FCC CAB
VCCI	JAPAN	C-4948,	2020-09-10	VCCI registration
VCCI	JAPAN	T-2416,	2020-09-10	VCCI registration
VCCI	JAPAN	R-4483(10 m),	2020-10-15	VCCI registration
VCCI	JAPAN	G-847	2018-12-13	VCCI registration
IC	CANADA	5799A-1	2019-11-07	IC filing
KOLAS	KOREA	NO.551	2021-08-20	KOLAS accredited Lab.

Copyright © 2018, LTA Co., Ltd.

2. Information about test item

2-1 Client & Manufacturer

Company name	:	DDPOPSTYLE Co.,Ltd.
Address	:	5th FL, Heejae BLDG, Junggye-Dong, 14-7, Deongneung-ro 83-gil, Seoul, Korea
Tel / Fax	:	TEL No : +82-2-930-8000

2-2 Equipment Under Test (EUT)

Trade name	:	DDPOPSTYLE
Model name	:	DDP150
Variant name	:	LWC-Q01, DDPOP-QWC, S2B-QWC, OQWC18
Serial number	:	Identical prototype
Date of receipt	:	June 10, 2018
EUT condition	:	Pre-production, not damaged
Antenna type	:	Inductive loop coil Antenna
Frequency Range	:	115 kHz ~ 205 kHz
Modulation Technology	:	MSK
Power Source	:	5 Vdc by adapter

2-3 Operation Frequency each of channel

Channel	Frequency (MHz)	Channel	Frequency (MHz)	Channel	Frequency (MHz)	Channel	Frequency (MHz)
1	0.115	6	0.140	11	0.165	16	0.190
2	0.120	7	0.145	12	0.170	17	0.195
3	0.125	8	0.150	13	0.175	18	0.200
4	0.130	9	0.155	14	0.180	19	0.205
5	0.135	10	0.160	15	0.185		

Copyright © 2018, LTA Co., Ltd.

3. Test Report

3.1 Summary of tests

FCC Part Section(s)	Parameter	Test Condition	Status (note 1)
15.203	Antenna requirement	Radiation	C
15.209(a)(f)	Radiated Spurious Emission		C
15.207	AC Conducted Emissions		C

Note 1: C=Complies NC=Not Complies NT=Not Tested NA=Not Applicable

Note 2: The data in this test report are traceable to the national or international standards.

Copyright © 2018, LTA Co., Ltd.

3.2 Technical Characteristics Test

3.2.1 Antenna requirement

Standard requirement	FCC Part15 C Section 15.203
An intentional radiator shall be designed to ensure that no antenna other than that furnished by the responsible party shall be used with the device. The use of a permanently attached antenna or of an antenna that uses a unique coupling to the intentional radiator, the manufacturer may design the unit so that a broken antenna can be replaced by the user, but the use of a standard antenna jack or electrical connector is prohibited.	
EUT Antenna	Inductive loop coil Antenna
The antenna is inductive loop coil antenna which permanently attached	

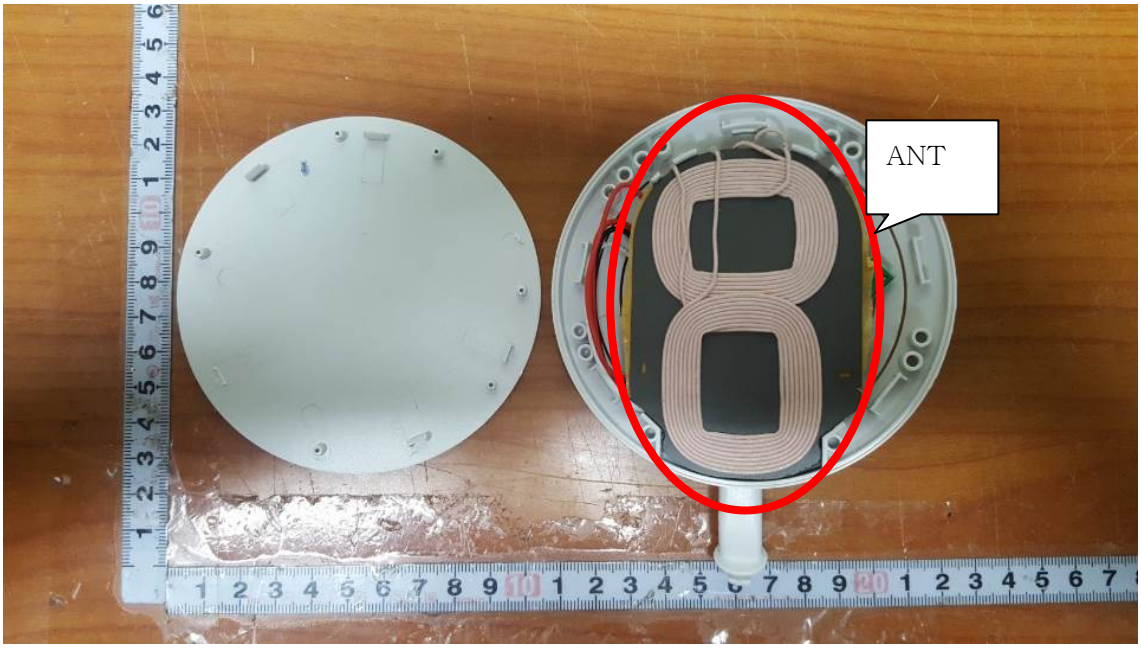

3.2.2 Radiated Spurious Emisson

Procedure:

Radiated emissions from 30 MHz to 25 GHz were measured according to the methods defines in ANSI C63.10-2013. The EUT is a placed on as turn table. For emissions testing at or below 1 GHz, the table height shall be 0.8 m above the reference ground plane. For emission measurements above 1 GHz, the table height shall be 1.5 m. The turn table shall rotate 360 degrees to determine the position of maximum emission level. EUT is set 3m away from the receiving antenna which varied from 1m to 4m to find out the highest emission. And also, each emission was to be maximized by changing the polarization of receiving antenna both horizontal and vertical. In order to find out the max. emission, the relative positions of this hand-held transmitter (EUT) was rotated through three orthogonal axes and measurement procedures for electric field radiated emissions above 1 GHz the EUT measurement is to be made "while keeping the antenna in the 'cone of radiation' from that area and pointed at the area both in azimuth and elevation, with polarization oriented for maximum response." is still within the 3dB illumination BW of the measurement antenna.

<u>The spectrum analyzer is set to:</u>

Center frequency = the worst channel

Frequency Range = 9 kHz ~ 10th harmonic.

RBW = 100 kHz (30 MHz ~ 1 GHz) VBW ≥ RBW

= 1 MHz (1 GHz ~ 10th harmonic)

Span = 100 MHz Detector function = peak

Trace = max hold Sweep = auto

below 30 MHz

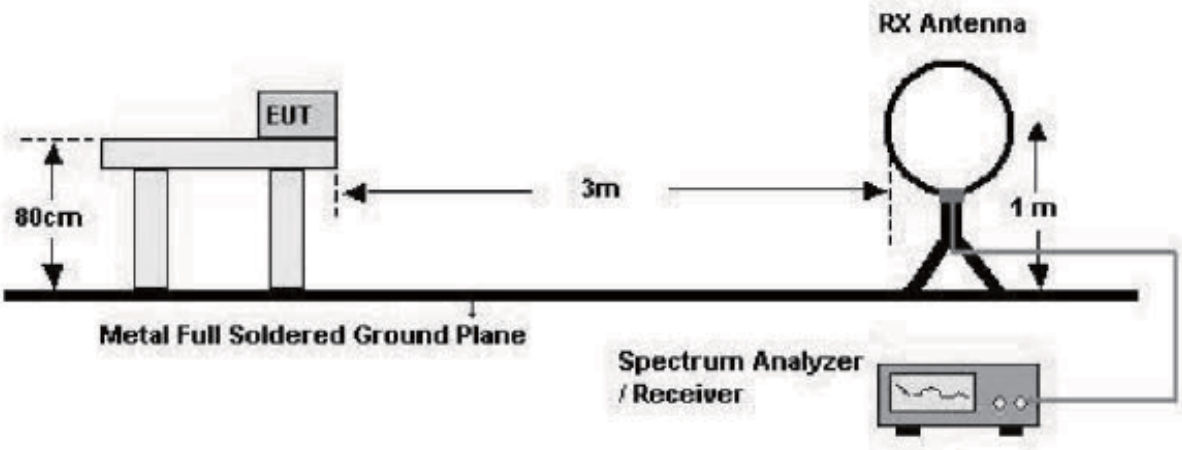

below 1 GHz (30 MHz to 1 GHz)

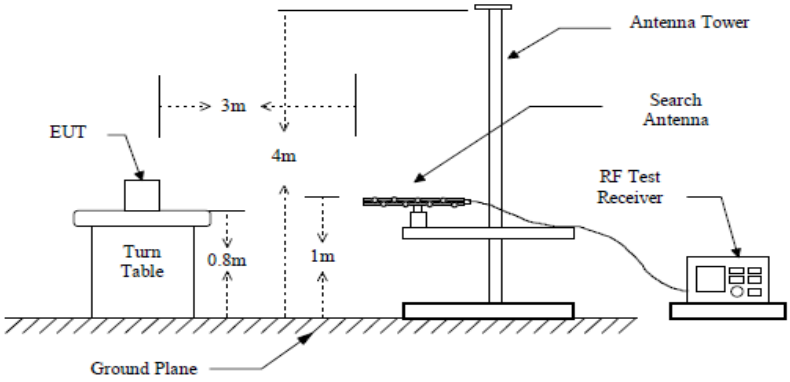

above 1 GHz

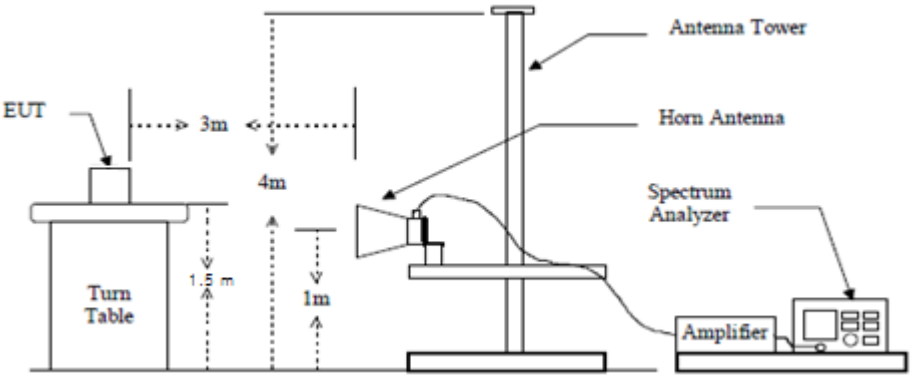

Measurement Data: **Complies**

- See next pages for actual measured data.
- No other emissions were detected at a level greater than 20 dB below limit include from 9 kHz to 30MHz.

Minimum Standard: FCC Part 15.209(a)

Frequency (MHz)	Limit (uV/m) @ 3 m
0.009 ~ 0.490	2400/F(kHz) **(@ 300 m)**
0.490 ~ 1.705	24000/F(kHz) **(@ 30 m)**
1.705 ~ 30	30**(@ 30 m)**
30 ~ 88	100 **
88 ~ 216	150 **
216 ~ 960	200 **
Above 960	500

** Except as provided in 15.209(g), fundamental emissions from intentional radiators operating under this Section shall not be located in the frequency bands 54-72 MHz, 76-88 MHz, 174-216 MHz or 470-806 MHz. However, operation within these frequency bands is permitted under other sections of this Part, e.g. 15.231 and 15.241.

Copyright © 2018, LTA Co., Ltd.

Radiated Emissions (9 kHz ~ 30 MHz)

9 kHz ~ 150 kHz

LTA
Laboratory for Test & Approval Co.,Ltd.
4, Songjuro 236Beon-gil, yanggi-myeon,
Yongin-si, Gyeonggi-do, Korea
Tel : +82-31-3236008,9
Fax : +82-31-3236010
www.ltalab.com

EUT/Model No.: DDP150 Temp/Humi: 22 / 36

Test Mode : Wireless Charging mode Tested by: KWON H C

Data: 208 File: C:\Program Files (x86)\e3\KN17.EM6 (211)

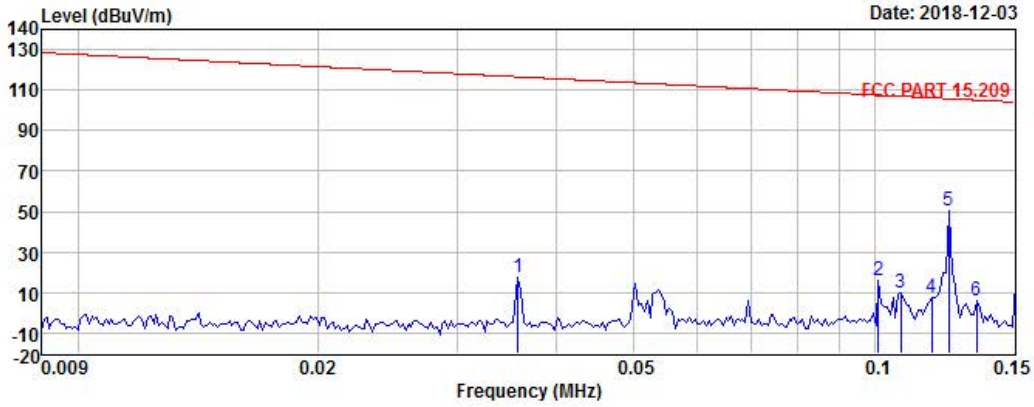

Freq MHz	Reading dBuV	C.F dB	Result QP dBuV/m	Limit dBuV/m	Margin dB	Height cm	Angle deg	Polarity
0.04	-2.03	19.65	17.62	116.54	98.92	**	**	HORIZONTAL
0.10	-3.34	19.64	16.30	107.52	91.22	**	**	HORIZONTAL
0.11	-9.87	19.63	9.76	106.96	97.20	**	**	HORIZONTAL
0.12	-11.79	19.62	7.83	106.18	98.35	**	**	HORIZONTAL
0.12	30.43	19.62	50.05	105.76	55.71	**	**	HORIZONTAL
0.13	-13.25	19.61	6.36	105.05	98.69	**	**	HORIZONTAL

Remarks: C.F (Correction Factor) = Antenna factor + Cable loss - Preamp gain

- 1 -

Copyright © 2018, LTA Co., Ltd.

LTA
Laboratory for Test & Approval Co.,Ltd.

4, Songjuro 236Beon-gil, yanggi-myeon,
Yongin-si, Gyeonggi-do, Korea
Tel : +82-31-3236008,9
Fax : +82-31-3236010
www.ltalab.com

EUT/Model No.: DDP150 Temp/Humi: 22 / 36

Test Mode : Wireless Charging mode Tested by: KWON H C

Data: 211 File: C:\Program Files (x86)\e3\KN17.EM6 (211)

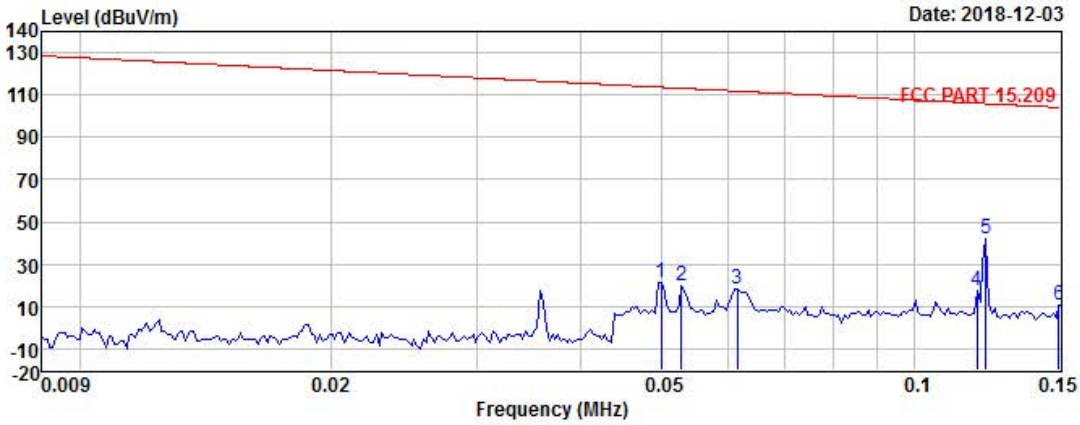

Freq	Reading	C.F	Result QP	Limit	Margin	Height	Angle	Polarity
MHz	dBuV	dB	dBuV/m	dBuV/m	dB	cm	deg	
0.05	1.90	19.78	21.68	113.65	91.97	**	**	VERTICAL
0.05	0.28	19.74	20.02	113.16	93.14	**	**	VERTICAL
0.06	-1.25	19.62	18.37	111.82	93.45	**	**	VERTICAL
0.12	-2.36	19.62	17.26	106.11	88.85	**	**	VERTICAL
0.12	22.60	19.61	42.21	105.90	63.69	**	**	VERTICAL
0.15	-8.78	19.58	10.80	104.14	93.34	**	**	VERTICAL

Remarks: C.F (Correction Factor) = Antenna factor + Cable loss - Preamp gain

- 1 -

Copyright © 2018, LTA Co., Ltd.

150 kHz ~ 30 MHz

LTA
Laboratory for Test & Approval Co.,Ltd.
4, Songjuro 236Beon-gil, yanggi-myeon,
Yongin-si, Gyeonggi-do, Korea
Tel : +82-31-3236008,9
Fax : +82-31-3236010
www.ltalab.com

EUT/Model No.: DDP150 Temp/Humi: 22 / 36

Test Mode : Wireless Charging mode Tested by: KWON H C

Data: 217 File: C:\Program Files (x86)\e3\KN17.EM6 (217)

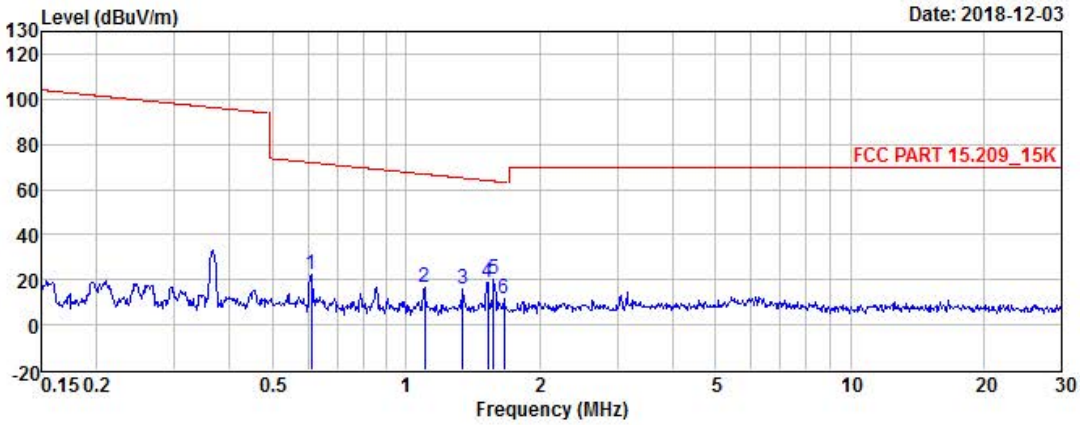

Freq MHz	Reading dBuV	C.F dB	Result QP dBuV/m	Limit dBuV/m	Margin dB	Height cm	Angle deg	Polarity
0.61	2.87	19.46	22.33	71.89	49.56	**	**	HORIZONTAL
1.10	-2.56	19.52	16.96	66.78	49.82	**	**	HORIZONTAL
1.34	-3.65	19.53	15.88	65.03	49.15	**	**	HORIZONTAL
1.53	-0.45	19.54	19.09	63.93	44.84	**	**	HORIZONTAL
1.58	0.63	19.55	20.18	63.65	43.47	**	**	HORIZONTAL
1.66	-7.96	19.55	11.59	63.19	51.60	**	**	HORIZONTAL

Remarks: C.F (Correction Factor) = Antenna factor + Cable loss - Preamp gain

Copyright © 2018, LTA Co., Ltd.

LTA
Laboratory for Test & Approval Co.,Ltd.

4, Songjuro 236Beon-gil, yanggi-myeon,
Yongin-si, Gyeonggi-do, Korea
Tel : +82-31-3236008,9
Fax : +82-31-3236010
www.ltalab.com

EUT/Model No.: DDP150 Temp/Humi: 22 / 36

Test Mode : Wireless Charging mode Tested by: KWON H C

Data: 214 File: C:\Program Files (x86)\e3\KN17.EM6 (214)

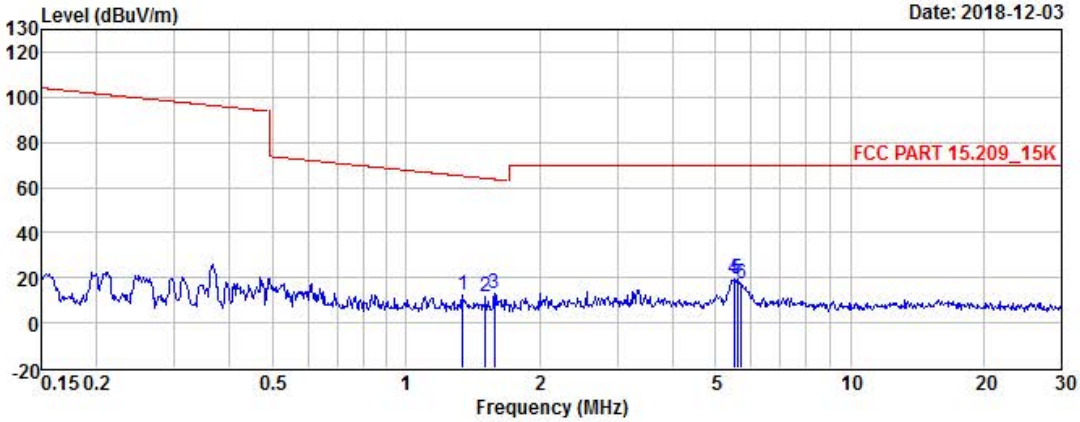

Freq	Reading	C.F	Result QP	Limit	Margin	Height	Angle	Polarity
MHz	dBuV	dB	dBuV/m	dBuV/m	dB	cm	deg	
1.34	-7.07	19.52	12.45	65.03	52.58	**	**	VERTICAL
1.51	-7.74	19.53	11.79	64.02	52.23	**	**	VERTICAL
1.59	-6.86	19.54	12.68	63.60	50.92	**	**	VERTICAL
5.51	-0.34	19.87	19.53	69.54	50.01	**	**	VERTICAL
5.59	-0.61	19.87	19.26	69.54	50.28	**	**	VERTICAL
5.71	-2.66	19.89	17.23	69.54	52.31	**	**	VERTICAL

Remarks: C.F (Correction Factor) = Antenna factor + Cable loss - Preamp gain

- 1 -

Copyright © 2018, LTA Co., Ltd.

30 ~ 1 GHz

LTA
Laboratory for Test & Approval Co.,Ltd.
4, Songjuro 236Beon-gil, yanggi-myeon,
Yongin-si, Gyeonggi-do, Korea
Tel : +82-31-3236008,9
Fax : +82-31-3236010
www.ltalab.com

EUT/Model No.: DDP150 Temp/Humi: 22 / 36

Test Mode : Wiress charging mode Tested by: KWON H C

Data: 37 File: C:\Program Files (x86)\e3\1812-1.EM6 (38)

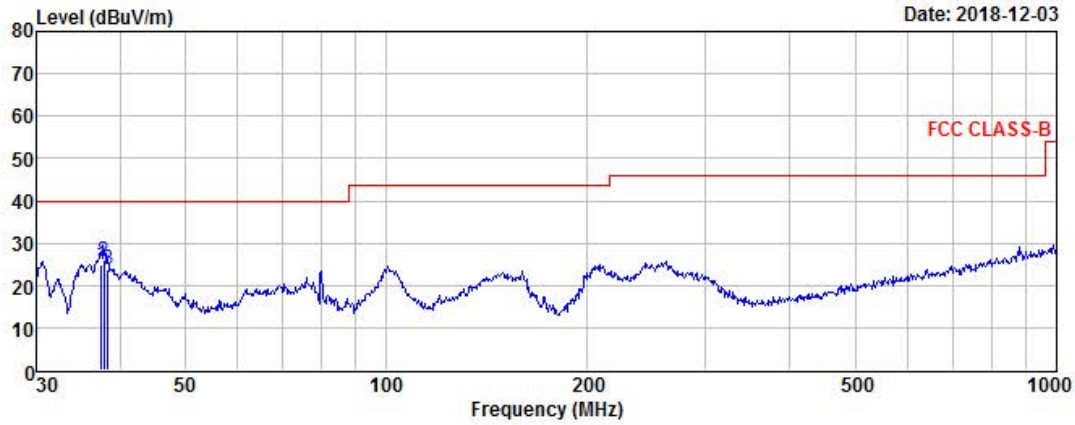

Freq MHz	Reading dBuV	C.F dB	Result QP dBuV/m	Limit dBuV/m	Margin dB	Height cm	Angle deg	Polarity
37.55	39.91	-14.94	24.97	40.00	15.03	394	163	HORIZONTAL
37.81	40.39	-14.91	25.48	40.00	14.52	347	125	HORIZONTAL
38.35	38.41	-14.85	23.56	40.00	16.44	354	152	HORIZONTAL

Remarks: C.F (Correction Factor) = Antenna factor + Cable loss - Preamp gain

Copyright © 2018, LTA Co., Ltd.

LTA
Laboratory for Test & Approval Co.,Ltd.
4, Songjuro 236Beon-gil, yanggi-myeon,
Yongin-si, Gyeonggi-do, Korea
Tel : +82-31-3236008,9
Fax : +82-31-3236010
www.ltalab.com

EUT/Model No.: DDP150 Temp/Humi: 22 / 36

Test Mode : Wiress charging mode Tested by: KWON H C

Data: 38 File: C:\Program Files (x86)\e3\1812-1.EM6 (38)

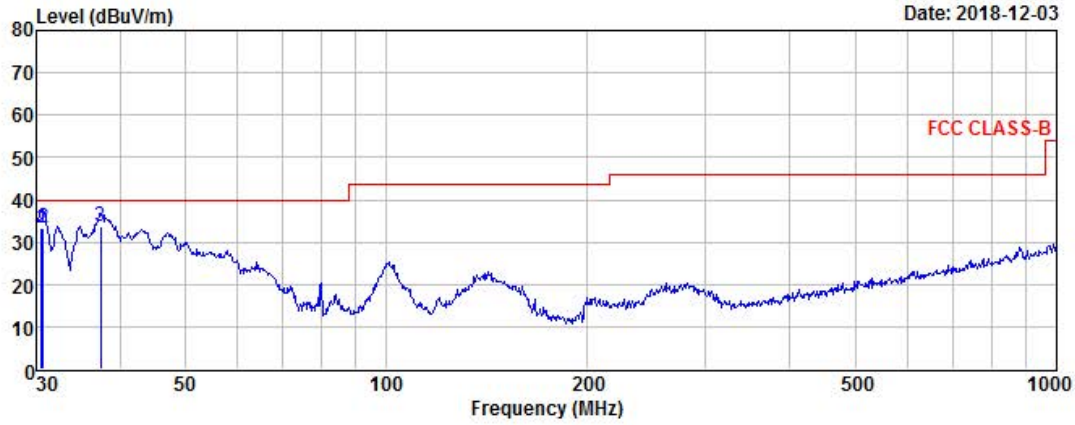

Freq	Reading	C.F	Result QP	Limit	Margin	Height	Angle	Polarity
MHz	dBuV	dB	dBuV/m	dBuV/m	dB	cm	deg	
30.53	48.91	-15.79	33.12	40.00	6.88	106	241	VERTICAL
30.75	48.96	-15.76	33.20	40.00	6.80	113	214	VERTICAL
37.42	48.63	-14.96	33.67	40.00	6.33	108	268	VERTICAL

Remarks: C.F (Correction Factor) = Antenna factor + Cable loss - Preamp gain

- 1 -

Copyright © 2018, LTA Co., Ltd.

3.2.3 AC Conducted Emissions

Procedure:

The conducted emissions are measured in the shielded room with a spectrum analyzer in peak hold. While the measurement, EUT had its hopping function disabled at the middle channels in line with Section 15.31(m). Emissions closest to the limit are measured in the quasi-peak mode (QP) with the tuned receiver using a bandwidth of 9 kHz. The emissions are maximized further by cable manipulation and Exerciser operation. The highest emissions relative to the limit are listed.

Minimum Standard: FCC Part 15.207(a) / EN 55022

Class B

Frequency Range	quasi-peak	Average
0.15 ~ 0.5	66 to 56 *	56 to 46 *
0.5 ~ 5	56	46
5 ~ 30	60	50

* Decreases with the logarithm of the frequency

Copyright © 2018, LTA Co., Ltd.

LTA
Laboratory for Test & Approval Co.,Ltd.

4, Songjuro 236 Beon-gil, Yangji-myeon
Cheoin-gu, Youngin-si, Gyeonggi-do
449-822 Korea
Tel:+82-31-3236008,9
Fax:+82-31-3236010

EUT / Model No.	: DDP150	Phase	: LINE
Test Mode	: Operating mode	Test Power	: 120 / 60
Temp. / Humi.	: 25 / 48	Test Engineer	: SEO J W

Data: 1773 File: D:\Conducted Data\2018\LTA_Conduction_2018_7.EM6 (1776)

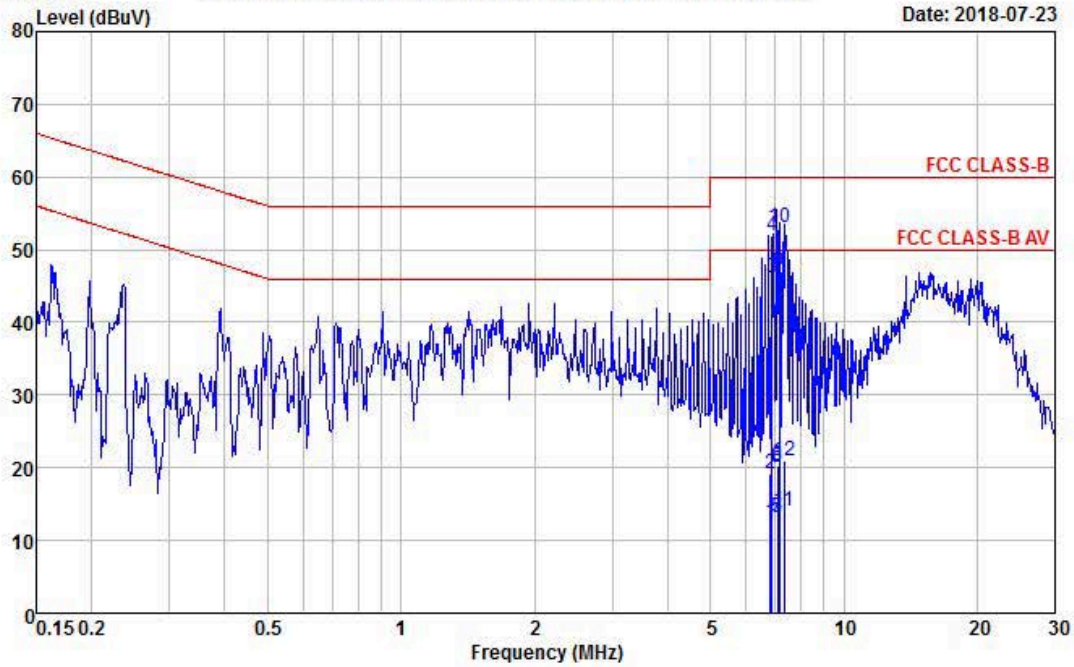

Freq MHz	RD QP dBuV	RD AV dBuV	C.F dB	Result QP dBuV	Result AV dBuV	Limit QP dBuV	Limit AV dBuV	Margin QP dB	Margin AV dB
6.820	-0.49	-7.31	19.72	19.23	12.41	60.00	50.00	40.77	37.59
6.895	32.14	26.47	19.73	51.87	46.20	60.00	50.00	8.13	3.80
7.082	0.47	-6.59	19.74	20.21	13.15	60.00	50.00	39.79	36.85
7.083	0.33	-6.65	19.74	20.07	13.09	60.00	50.00	39.93	36.91
7.155	33.20	27.28	19.75	52.95	47.03	60.00	50.00	7.05	2.97
7.345	1.14	-5.67	19.76	20.90	14.09	60.00	50.00	39.10	35.91

Remarks: C.F (Correction Factor) = Insertion loss + Cable loss + Pulse Limiter

- 1 -

Copyright © 2018, LTA Co., Ltd.

LTA
Laboratory for Test & Approval Co.,Ltd.

4, Songjuro 236 Beon-gil, Yangji-myeon
Cheoin-gu, Youngin-si, Gyeonggi-do
449-822 Korea
Tel:+82-31-3236008,9
Fax:+82-31-3236010

EUT / Model No.	: DDP150	Phase	: NEUTRAL
Test Mode	: Operating mode	Test Power	: 120 / 60
Temp. / Humi.	: 25 / 48	Test Engineer	: SEO J W

Data: 1776 File: D:\Conducted Data\2018\LTA_Conduction_2018_7.EM6 (1776)

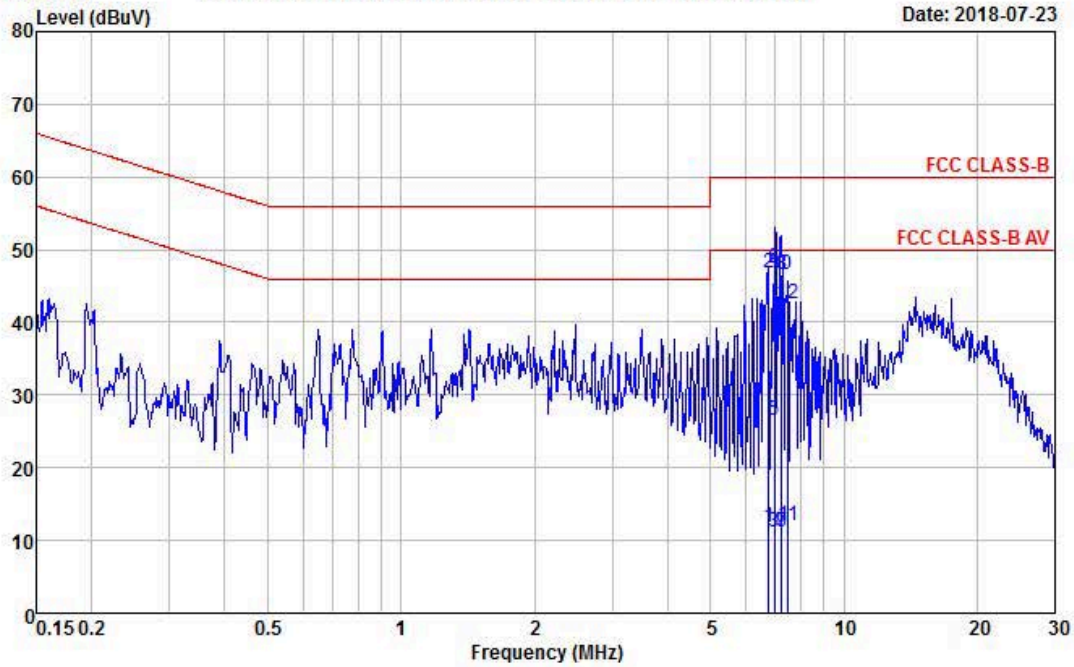

Freq MHz	RD QP dBuV	RD AV dBuV	C.F dB	Result QP dBuV	Result AV dBuV	Limit QP dBuV	Limit AV dBuV	Margin QP dB	Margin AV dB
6.765	27.04	-8.00	19.71	46.75	11.71	60.00	50.00	13.25	38.29
6.968	27.22	-8.57	19.72	46.94	11.15	60.00	50.00	13.06	38.85
6.969	27.66	6.88	19.72	47.38	26.60	60.00	50.00	12.62	23.40
7.226	26.94	-8.64	19.74	46.68	11.10	60.00	50.00	13.32	38.90
7.227	26.87	-8.59	19.74	46.61	11.15	60.00	50.00	13.39	38.85
7.485	22.77	-7.63	19.76	42.53	12.13	60.00	50.00	17.47	37.87

Remarks: C.F (Correction Factor) = Insertion loss + Cable loss + Pulse Limiter

- 1 -

Copyright © 2018, LTA Co., Ltd.

3.2.4 Bandwidth Measurement

Channel	Frequency (MHz)	Channel	Frequency (MHz)	Channel	Frequency (MHz)	Channel	Frequency (MHz)
1	0.115	6	0.140	11	0.165	16	0.190
2	0.120	7	0.145	12	0.170	17	0.195
3	0.125	8	0.150	13	0.175	18	0.200
4	0.130	9	0.155	14	0.180	19	0.205
5	0.135	10	0.160	15	0.185		

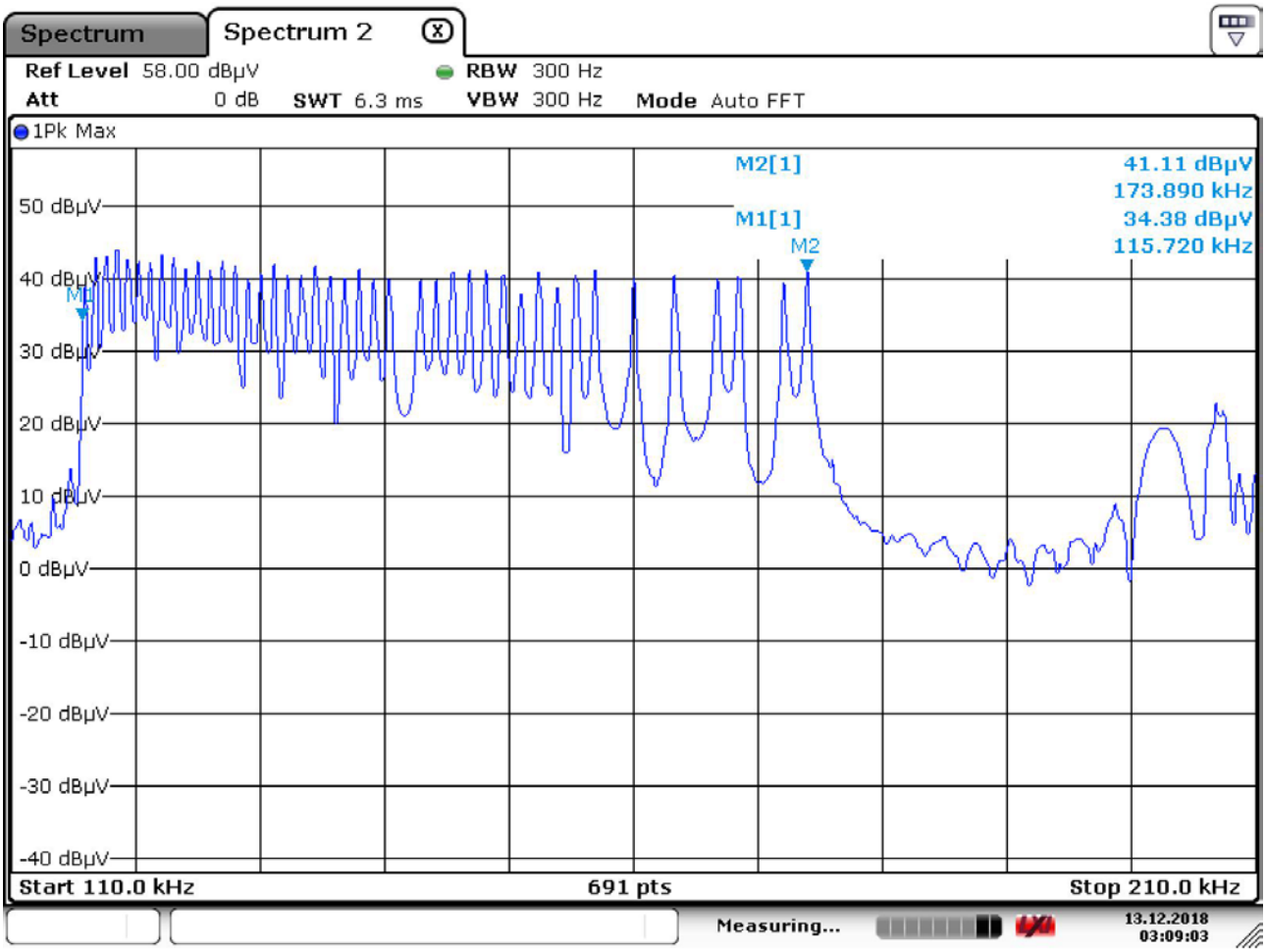

Date: 13.DEC.2018 03:09:04

APPENDIX I

TEST EQUIPMENT USED FOR TESTS

	Use	Description	Model No.	Serial No.	Manufacturer	Interval	Last Cal. Date
1	■	Signal Analyzer (9 kHz ~ 30 GHz)	FSV30	100757	R&S	1 year	2018-09-06
2		SYNTHESIZED CW GENERATOR	83711B	US34490456	HP	1 year	2018-03-19
3		Attenuator (3 dB)	8491A	37822	HP	1 year	2018-09-06
4		Attenuator (10 dB)	8491A	63196	HP	1 year	2018-09-06
5	■	EMI Test Receiver (~7 GHz)	ESCI7	100722	R&S	1 year	2018-09-06
6	■	RF Amplifier (~1.3 GHz)	8447D OPT 010	2944A07684	HP	1 year	2018-09-06
7	■	RF Amplifier (1~26.5 GHz)	8449B	3008A02126	HP	1 year	2018-03-21
8	■	Horn Antenna (1~18 GHz)	3115	00114105	ETS	2 year	2018-08-04
9		DRG Horn (Small)	3116B	81109	ETS-Lindgren	2 year	2018-05-03
10	■	DRG Horn (Small)	3116B	133350	ETS-Lindgren	2 year	2018-05-03
11	■	TRILOG Antenna	VULB 9160	9160-3237	SCHWARZBECK	2 year	2017-04-17
13		DC Power Supply	6674A	3637A01657	Agilent	-	-
14	■	Power Meter	EPM-441A	GB32481702	HP	1 year	2018-03-20
15	■	Power Sensor	8481A	3318A94972	HP	1 year	2018-09-06
16		Audio Analyzer	8903B	3729A18901	HP	1 year	2018-09-06
17		Modulation Analyzer	8901B	3749A05878	HP	1 year	2018-09-06
18		TEMP & HUMIDITY Chamber	YJ-500	LTAS06041	JinYoung Tech	1 year	2018-09-06
19		Stop Watch	HS-3	812Q08R	CASIO	2 year	2018-03-21
20	■	LISN	KNW-407	8-1430-1	Kyoritsu	1 year	2018-09-06
21		Two-Lime V-Network	ESH3-Z5	893045/017	R&S	1 year	2018-03-20
22		Highpass Filter	WHKX1.5/15G-10SS	74	Wainwright Instruments	1 year	2018-03-20
23		Highpass Filter	WHKX3.0/18G-10SS	118	Wainwright Instruments	1 year	2018-03-20
24		OSP120 BASE UNIT	OSP120	101230	R&S	1 year	2018-03-21
25	■	Signal Generator(100 kHz ~ 40 GHz)	SMB100A	177621	R&S	1 year	2018-03-20
26		Vector Signal Generator(9kHz ~ 6 GHz)	SMBV100A	255081	R&S	1 year	2018-03-20
27		Signal Analyzer (10 Hz ~ 40 GHz)	FSV40	101367	R&S	1 year	2018-03-21
28	■	Loop Antenna	HFH2-Z2	-	R&S	2 year	2017-02-27
29	■	RF Cable	SUCOFLEX	-	Huber+suhner	-	-

Copyright © 2018, LTA Co., Ltd.

APPENDIX II

TEST EQUIPMENT USED FOR TESTS

	Use	Description	Model No.	Serial No.	Manufacturer	Interval	Last Cal. Date
1	■	Signal Analyzer (9 kHz ~ 30 GHz)	FSV30	100757	R&S	1 year	2017-09-07
3		SYNTHESIZED CW GENERATOR	83711B	US34490456	HP	1 year	2018-03-20
4		Attenuator (3 dB)	8491A	37822	HP	1 year	2017-09-07
5		Attenuator (10 dB)	8491A	63196	HP	1 year	2017-09-07
6		EMI Test Receiver (~7 GHz)	ESCI7	100722	R&S	1 year	2017-09-07
7		RF Amplifier (~1.3 GHz)	8447D OPT 010	2944A07684	HP	1 year	2017-09-07
8		Horn Antenna (1~18 GHz)	3115	00114105	ETS	2 year	2017-04-17
9		DRG Horn (Small)	3116B	81109	ETS-Lindgren	2 year	2018-05-03
10		DRG Horn (Small)	3116B	133350	ETS-Lindgren	2 year	2018-05-03
11	■	TRILOG Antenna	VULB 9160	9160-3237	SCHWARZBECK	2 year	2018-04-17
12	■	Temp.Humidity Data Logger	SK-L200TH II A	00801	SATO	1 year	2017-09-07
13		Splitter (SMA)	ZFSC-2-2500	SF617800326	Mini-Circuits	-	-
14	■	DC Power Supply	6674A	3637A01657	Agilent	-	-
15	■	Power Meter	EPM-441A	GB32481702	HP	1 year	2018-03-20
16	■	Power Sensor	8481A	3318A94972	HP	1 year	2017-12-23
17		Audio Analyzer	8903B	3729A18901	HP	1 year	2017-09-07
18		Modulation Analyzer	8901B	3749A05878	HP	1 year	2017-09-07
19		TEMP & HUMIDITY Chamber	YJ-500	LTAS06041	JinYoung Tech	1 year	2017-09-07
20		Stop Watch	HS-3	812Q08R	CASIO	2 year	2017-03-21
21		LISN	KNW-407	8-1430-1	Kyoritsu	1 year	2017-09-12
22		Two-Lime V-Network	ESH3-Z5	893045/017	R&S	1 year	2018-03-20
23		Highpass Filter	WHKX1.5/15G-10SS	74	Wainwright Instruments	1 year	2018-03-19
24		Highpass Filter	WHKX3.0/18G-10SS	118	Wainwright Instruments	1 year	2018-03-19
25	■	Loop Antenna	HFH2-Z2	–	ROHDE&SCHWARZ	2 year	2017-02-27
26		OSP120 BASE UNIT	OSP120	101230	R&S	1 year	2018-03-21
27		Signal Generator(100 kHz ~ 40 GHz)	SMB100A03	177621	R&S	1 year	2018-03-20
28	■	Signal Generator(9kHz ~ 40 GHz)	SMB100V03	255081	R&S	1 year	2018-03-20
29		Signal Analyzer (10 Hz ~ 40 GHz)	FSV40	101367	R&S	1 year	2018-03-21
30	■	RF Cable	SUCOFLEX	-	Huber+suhner	-	-

Copyright © 2018, LTA Co., Ltd.