LTA
Laboratory for Test & Approval Co.,Ltd.

243 Jubug-Ri,Yangji-Myeon, Yongin-Si, Gyeonggi-Do, Korea 17159
Tel: +82-31-323-6008 Fax: +82-31-323-6010
http://www.ltalab.com

Dates of Tests: Sep 26 ~ November 02, 2020
Test Report S/N: LR500112011T
Test Site : LTA CO., LTD.

CERTIFICATION OF COMPLIANCE

FCC ID. **2AQQTXV-110**

APPLICANT **CNA Co., Ltd.**

Equipment Class	:	**DCD - Low Power Transmitter Below 1705 kHz**
Manufacturing Description	:	**Wireless Charger**
Manufacturer	:	**CNA Co., Ltd.**
Model name	:	**XV-110**
Variant name	:	**XV-110A, XV-110B, XV-110C, XV-110D, XV-110E, XV-110F, XV-110G, XV-110H, XV-110I, XV-110J**
Test Device Serial No.:	:	**Identical prototype**
Rule Part(s)	:	**FCC Part 15.209 Subpart C ; ANSI C-63.10-2013**
Frequency Range	:	**110 ~ 146 KHz**
Data of issue	:	**November 05, 2018**

This test report is issued under the authority of:

JaBeom.Koo

JaBeom, Koo / Manager

The test was supervised by:

Yeon Jae Hum, Test Engineer

This test result only responds to the tested sample. It is not allowed to copy this report even partly without the allowance of the test laboratory. The report must not be used by the client to claim product certification, approval, or endorsement by NVLAP, NIST, or any agency of the Federal Government.

NVLAP LAB Code.: 200723-0

Copyright © 2018, LTA Co., Ltd.

TABLE OF CONTENTS

1. GENERAL INFORMATION ---------- 3

2. INFORMATION ABOUT TEST ITEM ---------- 4

3. TEST REPORT ---------- 5

3.1 SUMMARY OF TESTS ---------- 5

3.2 TECHNICAL CHARACTERISTICS TEST ---------- 6

3.2.1 Antenna requirement ---------- 6

3.2.2 Spurious Emission ---------- 7

3.2.3 AC Conducted Emissions ---------- 15

APPENDIX

APPENDIX TEST EQUIPMENT USED FOR TESTS ---------- 16

Copyright © 2018, LTA Co., Ltd.

1. General information

1-1 Test Performed

Company name	:	LTA Co., Ltd.
Address	:	243, Jubug-ri,Yangji-Myeon,Youngin-Si, Kyunggi-Do, Korea. 17159
Web site	:	http://www.ltalab.com
E-mail	:	chahn@ltalab.com
Telephone	:	+82-31-323-6008
Facsimile		+82-31-323-6010

Quality control in the testing laboratory is implemented as per ISO/IEC 17025 which is the "General requirements for the competents of calibration and testing laboratory".

1-2 Accredited agencies

LTA Co., Ltd. is approved to perform EMC testing by the following agencies:

Agency	Country	Accreditation No.	Validity	Reference
NVLAP	U.S.A	200723-0	2021-09-30	ECT accredited Lab.
RRA	KOREA	KR0049	-	RRA accredited Lab.
	U.S.A		2021-04-11	
	CANADA		2021-06-16	
	VIETNAM		2021-04-12	
VCCI	JAPAN	C-14948	2023-09-10	VCCI registration
		T-12416	2023-09-10	
		R-14483	2023-10-15	
		G-10847	2021-12-13	
KOLAS	KOREA	KT551	2021-08-20	KOLAS accredited Lab.

Copyright © 2018, LTA Co., Ltd.

2. Information about test item

2-1 Client & Manufacturer

Company name	:	CNA Co., Ltd.
Address	:	1-204, 160, Hyanggyo-ro, Paldal-gu, Suwon-si, Gyeonggi-do, Republic of Korea
Tel / Fax	:	+82-010-3886-2007 / -

2-2 Equipment Under Test (EUT)

Trade name	:	Wireless Charger
Model name	:	XV-110
Variant name	:	XV-110A, XV-110B, XV-110C, XV-110D, XV-110E, XV-110F, XV-110G, XV-110H, XV-110I, XV-110J
Serial number	:	Identical prototype
Date of receipt	:	June 19, 2020
EUT condition	:	Pre-production, not damaged
Antenna type	:	inductive loop coil antenna
Frequency Range	:	110 ~ 146 kHz
Modulation Technology	:	MSK
Power Source	:	DC 9 V by USB Port

2-3 Tested frequency

	LOW	MID	HIGH
Frequency (KHz)	110	130	146

Copyright © 2018, LTA Co., Ltd.

3. Test Report

3.1 Summary of tests

FCC Part Section(s)	Parameter	Test Condition	Status (note 1)
15.203	Antenna requirement	Radiation	C
15.209(a)(f)	Radiated Spurious Emission		C
15.207	AC Conducted Emissions		N/A

Note 1: C=Complies NC=Not Complies NT=Not Tested NA=Not Applicable

Note 2: The data in this test report are traceable to the national or international standards.

Copyright © 2018, LTA Co., Ltd.

3.2 Technical Characteristics Test

3.2.1 Antenna requirement

Standard requirement	FCC Part15 C Section 15.203
An intentional radiator shall be designed to ensure that no antenna other than that furnished by the responsible party shall be used with the device. The use of a permanently attached antenna or of an antenna that uses a unique coupling to the intentional radiator, the manufacturer may design the unit so that a broken antenna can be replaced by the user, but the use of a standard antenna jack or electrical connector is prohibited.	
EUT Antenna	Inductive loop coil Antenna
The antenna is inductive loop coil antenna which permanently attached	

Copyright © 2018, LTA Co., Ltd.

3.2.2 Radiated Spurious Emisson

Procedure:

Radiated emissions from 30 MHz to 25 GHz were measured according to the methods defines in ANSI C63.10-2013. The EUT is a placed on as turn table. For emissions testing at or below 1 GHz, the table height shall be 0.8 m above the reference ground plane. For emission measurements above 1 GHz, the table height shall be 1.5 m. The turn table shall rotate 360 degrees to determine the position of maximum emission level. EUT is set 3m away from the receiving antenna which varied from 1m to 4m to find out the highest emission. And also, each emission was to be maximized by changing the polarization of receiving antenna both horizontal and vertical. In order to find out the max. emission, the relative positions of this hand-held transmitter (EUT) was rotated through three orthogonal axes and measurement procedures for electric field radiated emissions above 1 GHz the EUT measurement is to be made "while keeping the antenna in the 'cone of radiation' from that area and pointed at the area both in azimuth and elevation, with polarization oriented for maximum response." is still within the 3dB illumination BW of the measurement antenna.

<u>The spectrum analyzer is set to:</u>

Center frequency = the worst channel

Frequency Range = 9 kHz ~ 10th harmonic.

RBW = 100 kHz (30 MHz ~ 1 GHz)	VBW ≥ RBW
= 1 MHz (1 GHz ~ 10th harmonic)	
Trace = max hold	Detector function = peak
Sweep = auto	Sweep = auto

below 30 MHz

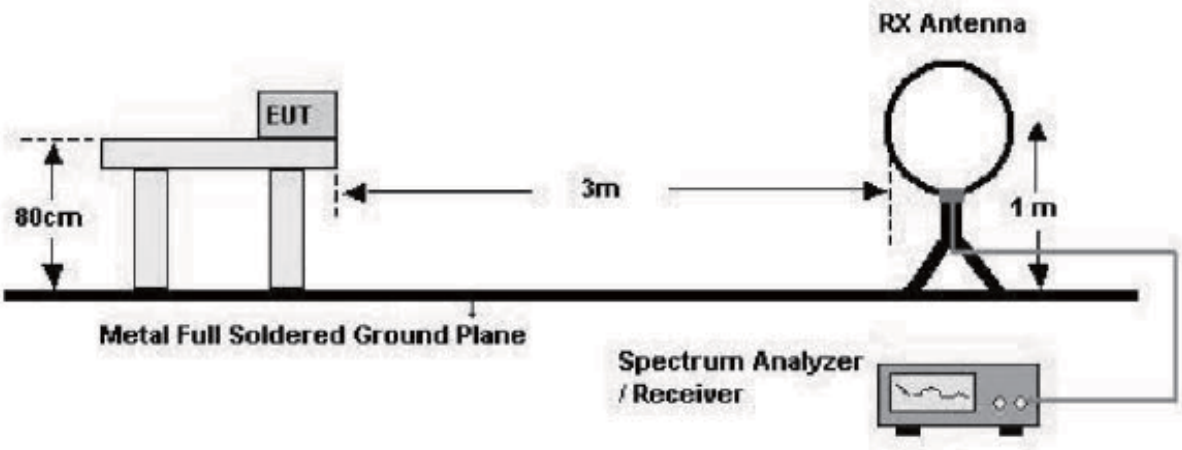

below 1 GHz (30 MHz to 1 GHz)

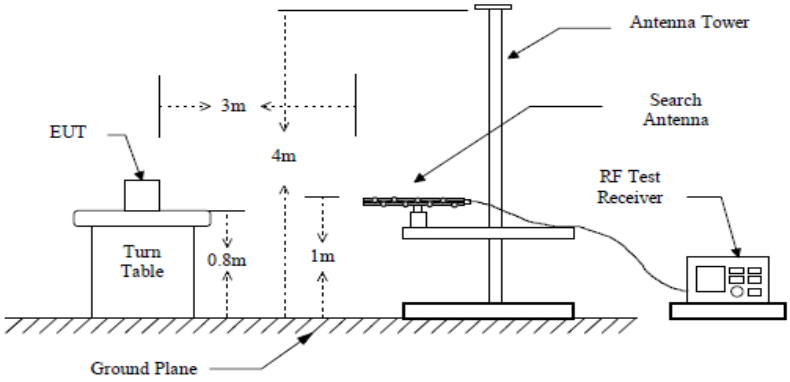

above 1 GHz

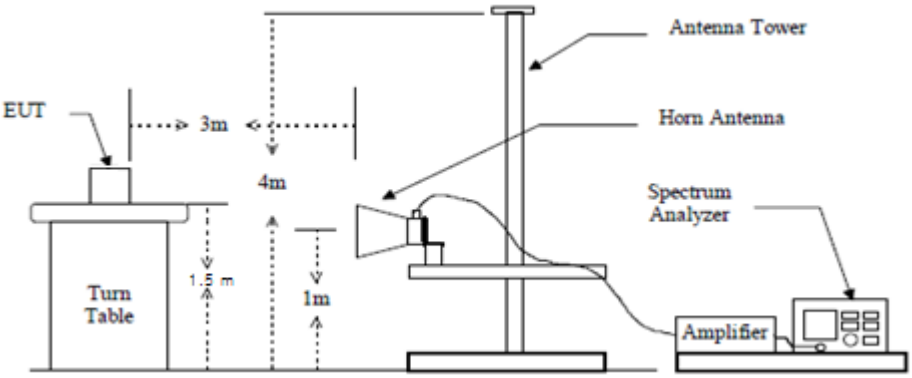

Measurement Data: **Complies**

- See next pages for actual measured data.
- No other emissions were detected at a level greater than 20 dB below limit include from 9 kHz to 30MHz.

Minimum Standard: FCC Part 15.209(a)

Frequency (MHz)	Limit (uV/m) @ 3 m
0.009 ~ 0.490	2400/F(kHz) **(@ 300 m)**
0.490 ~ 1.705	24000/F(kHz) **(@ 30 m)**
1.705 ~ 30	30**(@ 30 m)**
30 ~ 88	100 **
88 ~ 216	150 **
216 ~ 960	200 **
Above 960	500

** Except as provided in 15.209(g), fundamental emissions from intentional radiators operating under this Section shall not be located in the frequency bands 54-72 MHz, 76-88 MHz, 174-216 MHz or 470-806 MHz. However, operation within these frequency bands is permitted under other sections of this Part, e.g. 15.231 and 15.241.

Copyright © 2018, LTA Co., Ltd.

Radiated Emissions (9 kHz ~ 30 MHz)

9 kHz ~ 150 kHz

LTA

4, Songjuro 236Beon-gil, yanggi-myeon,
Yongin-si, Gyeonggi-do, Korea
Tel : +82-31-3236008,9
Fax : +82-31-3236010
www.ltalab.com

EUT/Model No.: XV-110 Temp/Humi: 20 'C / 42 % R.H.

Test Mode : Operating mode Tested by: YEON J H

Power :

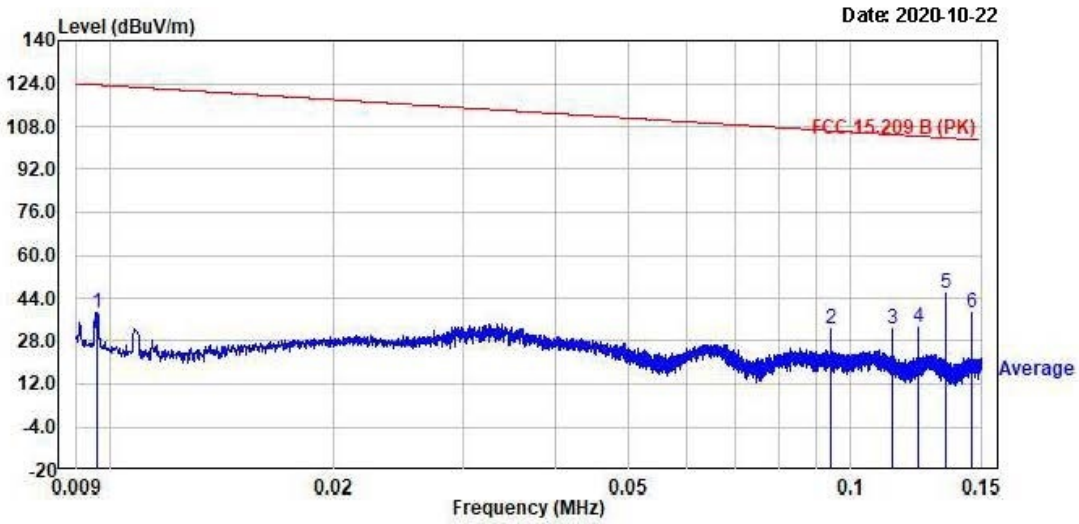

No.	Freq MHz	Reading dBµV	C.F dB	Result QP dBµV/m	Limit dBµV/m	Margin dB	Height cm	Angle deg	Polarity
1.	0.01	70.60	-31.98	38.62	123.50	84.88	------	------	line
2.	0.09	64.37	-32.03	32.34	106.38	74.04	------	------	line
3.	0.11	64.63	-32.01	32.62	104.97	72.35	------	------	line
4.	0.12	64.99	-32.00	32.99	104.36	71.37	------	------	line
5.	0.13	77.60	-31.98	45.62	103.69	58.07	------	------	line
6.	0.15	70.28	-31.97	38.31	103.11	64.80	------	------	line

Remarks: C.F (Correction Factor) = Antenna factor + Cable loss - Preamp gain

- 1 -

Copyright © 2018, LTA Co., Ltd.

4, Songjuro 236Beon-gil, yanggi-myeon,
Yongin-si, Gyeonggi-do, Korea
Tel : +82-31-3236008,9
Fax : +82-31-3236010
www.ltalab.com

EUT/Model No.: XV-110 Temp/Humi: 20 'C / 42 % R.H.

Test Mode : Operating mode Tested by: YEON J H

Power :

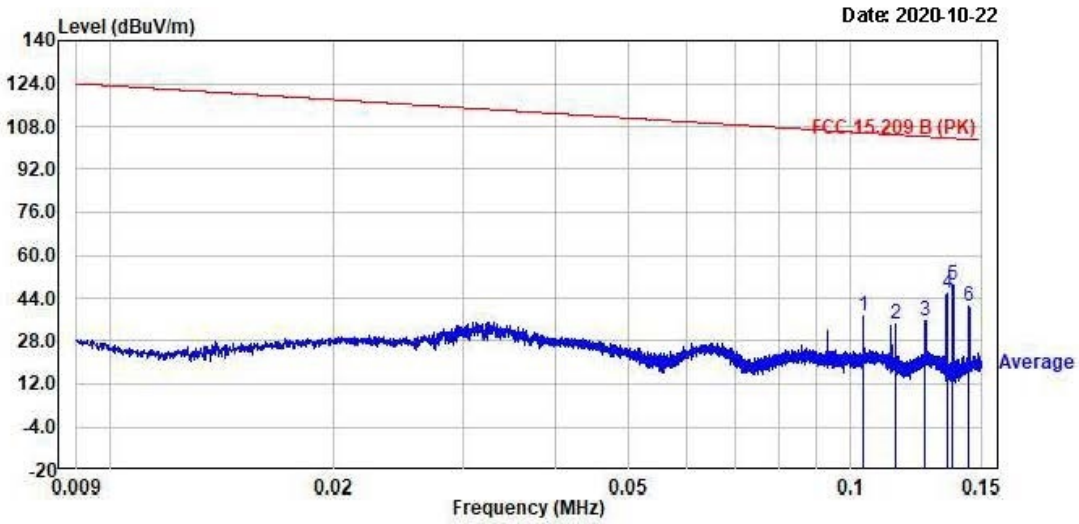

No.	Freq MHz	Reading dBµV	C.F dB	Result QP dBµV/m	Limit dBµV/m	Margin dB	Height cm	Angle deg	Polarity
1.	0.10	69.10	-32.02	37.08	105.62	68.54	------	------	Vertical
2.	0.12	66.19	-32.01	34.18	104.87	70.69	------	------	Vertical
3.	0.13	67.65	-31.99	35.66	104.18	68.52	------	------	Vertical
4.	0.13	77.81	-31.98	45.83	103.69	57.86	------	------	Vertical
5.	0.14	80.96	-31.98	48.98	103.54	54.56	------	------	Vertical
6.	0.14	72.71	-31.97	40.74	103.16	62.42	------	------	Vertical

Remarks: C.F (Correction Factor) = Antenna factor + Cable loss - Preamp gain

- 1 -

Copyright © 2018, LTA Co., Ltd.

150 kHz ~ 30 MHz

4, Songjuro 236Beon-gil, yanggi-myeon,
Yongin-si, Gyeonggi-do, Korea
Tel : +82-31-3236008,9
Fax : +82-31-3236010
www.ltalab.com

EUT/Model No.: XV-110 Temp/Humi: 20 'C / 42 % R.H.

Test Mode : Operating mode Tested by: YEON J H

Power :

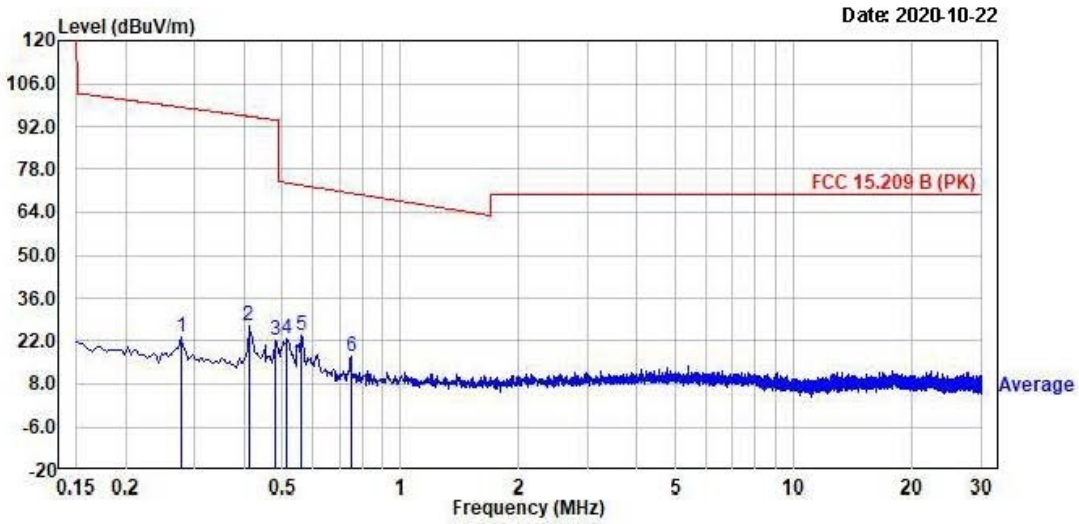

No.	Freq MHz	Reading dBµV	C.F dB	Result QP dBµV/m	Limit dBµV/m	Margin dB	Height cm	Angle deg	Polarity
1.	0.28	55.06	-31.77	23.29	98.28	74.99	------	------	Horizontal
2.	0.41	58.62	-31.58	27.04	95.32	68.28	------	------	Horizontal
3.	0.48	53.64	-31.52	22.12	94.12	72.00	------	------	Horizontal
4.	0.52	54.40	-31.50	22.90	73.55	50.65	------	------	Horizontal
5.	0.56	55.08	-31.47	23.61	72.82	49.21	------	------	Horizontal
6.	0.75	48.19	-31.37	16.82	70.24	53.42	------	------	Horizontal

Remarks: C.F (Correction Factor) = Antenna factor + Cable loss - Preamp gain

- 1 -

Copyright © 2018, LTA Co., Ltd.

4, Songjuro 236Beon-gil, yanggi-myeon,
Yongin-si, Gyeonggi-do, Korea
Tel : +82-31-3236008,9
Fax : +82-31-3236010
www.ltalab.com

EUT/Model No.: XV-110 Temp/Humi: 20 'C / 42 % R.H.

Test Mode : Operating mode Tested by: YEON J H

Power :

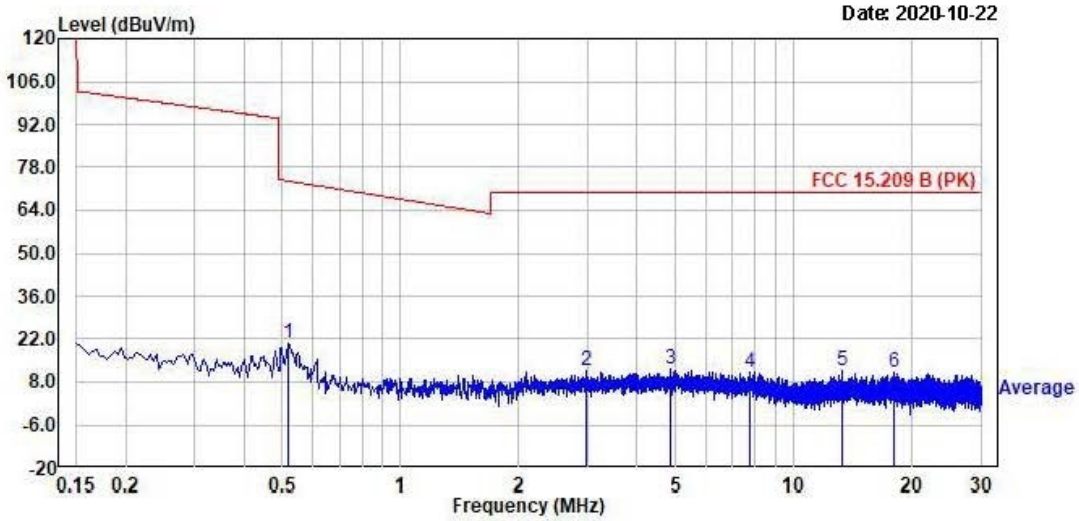

No.	Freq MHz	Reading dBμV	C.F dB	Result QP dBμV/m	Limit dBμV/m	Margin dB	Height cm	Angle deg	Polarity
1.	0.52	52.04	-31.50	20.54	73.49	52.95	------	------	Vertical
2.	2.98	42.29	-30.80	11.49	70.00	58.51	------	------	Vertical
3.	4.87	42.47	-30.40	12.07	70.00	57.93	------	------	Vertical
4.	7.76	41.64	-30.36	11.28	70.00	58.72	------	------	Vertical
5.	13.33	42.57	-30.93	11.64	70.00	58.36	------	------	Vertical
6.	18.07	41.03	-30.10	10.93	70.00	59.07	------	------	Vertical

Remarks: C.F (Correction Factor) = Antenna factor + Cable loss - Preamp gain

- 1 -

Copyright © 2018, LTA Co., Ltd.

30 MHz ~ 1 GHz

LTA

4, Songjuro 236Beon-gil, yanggi-myeon,
Yongin-si, Gyeonggi-do, Korea
Tel : +82-31-3236008,9
Fax : +82-31-3236010
www.ltalab.com

EUT/Model No.: Temp/Humi: 23 'C / 38 % R.H.

Test Mode : Operating mode Tested by:

Power :

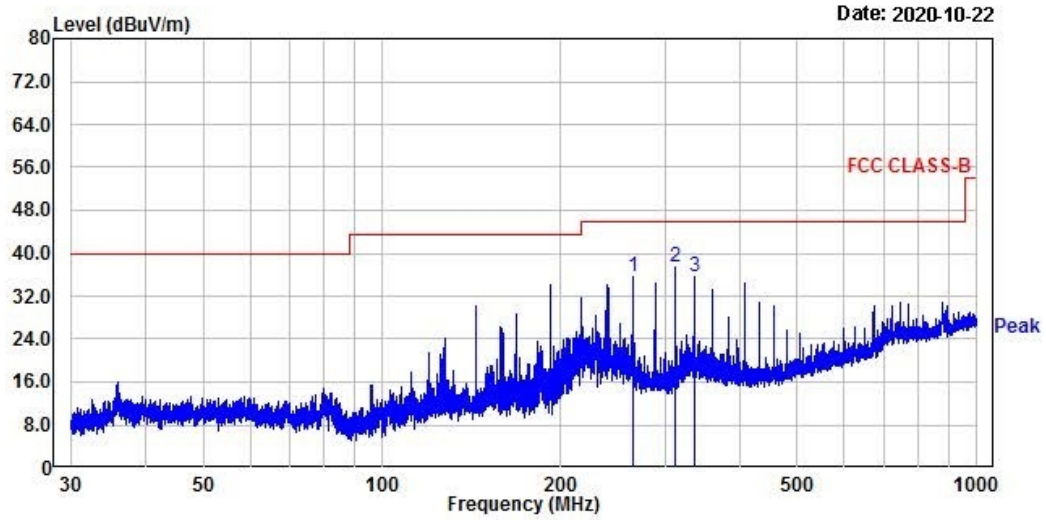

No.	Freq MHz	Reading dBµV	C.F dB	Result QP dBµV/m	Limit dBµV/m	Margin dB	Height cm	Angle deg	Polarity
1.	264.05	47.79	-12.13	35.66	46.00	10.34	100	0	horizontal
2.	312.04	47.84	-10.41	37.43	46.00	8.57	100	336	horizontal
3.	336.04	45.60	-9.88	35.72	46.00	10.28	100	250	horizontal

Remarks: C.F (Correction Factor) = Antenna factor + Cable loss - Preamp gain

- 1 -

Copyright © 2018, LTA Co., Ltd.

LTA

4, Songjuro 236Beon-gil, yanggi-myeon,
Yongin-si, Gyeonggi-do, Korea
Tel : +82-31-3236008,9
Fax : +82-31-3236010
www.ltalab.com

EUT/Model No.: Temp/Humi: 23 'C / 38 % R.H.

Test Mode : Operating mode Tested by:

Power :

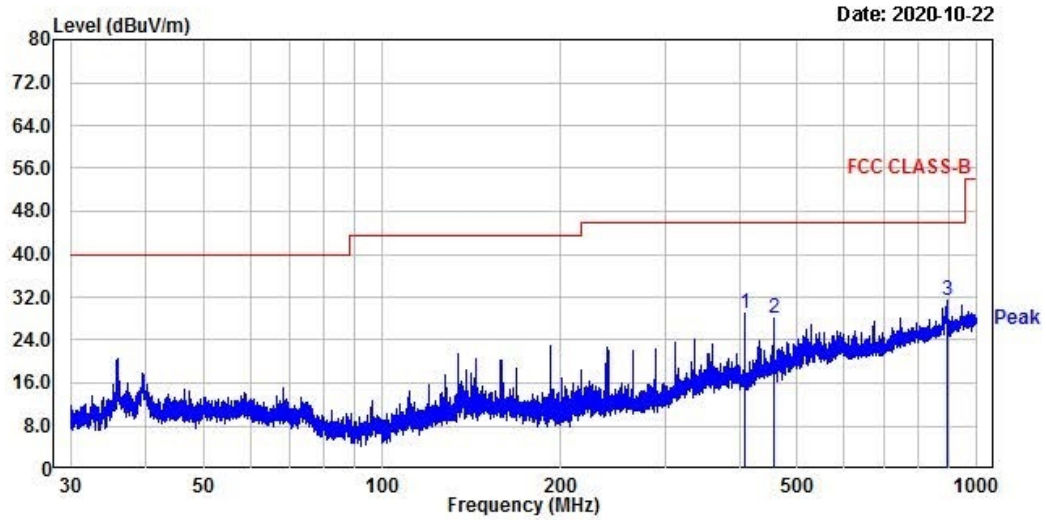

No.	Freq MHz	Reading dBµV	C.F dB	Result QP dBµV/m	Limit dBµV/m	Margin dB	Height cm	Angle deg	Polarity
1.	408.05	37.43	-8.56	28.87	46.00	17.13	100	214	vertical
2.	456.11	35.91	-7.75	28.16	46.00	17.84	100	226	vertical
3.	893.47	30.55	0.71	31.26	46.00	14.74	100	191	vertical

Remarks: C.F (Correction Factor) = Antenna factor + Cable loss - Preamp gain

- 1 -

Copyright © 2018, LTA Co., Ltd.

3.2.3 AC Conducted Emissions

Procedure:

The conducted emissions are measured in the shielded room with a spectrum analyzer in peak hold. While the measurement, EUT had its hopping function disabled at the middle channels in line with Section 15.31(m). Emissions closest to the limit are measured in the quasi-peak mode (QP) with the tuned receiver using a bandwidth of 9 kHz. The emissions are maximized further by cable manipulation and Exerciser operation. The highest emissions relative to the limit are listed.

Minimum Standard: FCC Part 15.207(a) / EN 55022

Measurement Data: N/A

Class B

Frequency Range	quasi-peak	Average
0.15 ~ 0.5	66 to 56 *	56 to 46 *
0.5 ~ 5	56	46
5 ~ 30	60	50

* Decreases with the logarithm of the frequency

Copyright © 2018, LTA Co., Ltd.

APPENDIX I

TEST EQUIPMENT USED FOR TESTS

	Use	Description	Model No.	Serial No.	Manufacturer	Interval	Next Cal. Date
1	■	Signal Analyzer (9 kHz ~ 30 GHz)	FSV30	100757	R&S	1 year	2021-09-06
2	■	Signal Generator (~3.2 GHz)	8648C	3623A02597	HP	1 year	2021-03-16
3		SYNTHESIZED CW GENERATOR	83711B	US34490456	HP	1 year	2021-03-16
4		Attenuator (3 dB)	8491A	37822	HP	1 year	2021-09-06
5		Attenuator (10 dB)	8491A	63196	HP	1 year	2021-09-06
6	■	EMI Test Receiver (~7 GHz)	ESCI7	100722	R&S	1 year	2021-09-06
7		RF Amplifier (~1.3 GHz)	8447D OPT 010	2944A07684	HP	1 year	2021-09-06
8		RF Amplifier (1~26.5 GHz)	8449B	3008A02126	HP	1 year	2021-03-16
9		Horn Antenna (1~18 GHz)	3115	00114105	ETS	2 year	2022-08-04
10		DRG Horn (Small)	3116B	81109	ETS-Lindgren	2 year	2022-03-16
11		DRG Horn (Small)	3116B	133350	ETS-Lindgren	2 year	2022-03-16
12	■	TRILOG Antenna	VULB 9160	9160-3237	SCHWARZBECK	2 year	2021-03-16
13		Temp.Humidity Data Logger	SK-L200TH II A	00801	SATO	1 year	2021-03-16
14		Splitter (SMA)	ZFSC-2-2500	SF617800326	Mini-Circuits	-	-
15	■	DC Power Supply	6674A	3637A01657	Agilent	-	-
17	■	Power Meter	EPM-441A	GB32481702	HP	1 year	2021-03-16
18	■	Power Sensor	8481A	3318A94972	HP	1 year	2021-09-06
19		Audio Analyzer	8903B	3729A18901	HP	1 year	2021-09-06
20		Moduleation Analyzer	8901B	3749A05878	HP	1 year	2021-09-06
21		TEMP & HUMIDITY Chamber	YJ-500	LTAS06041	JinYoung Tech	1 year	2021-09-06
22		Stop Watch	HS-3	812Q08R	CASIO	2 year	2021-03-16
23		LISN	KNW-407	8-1430-1	Kyoritsu	1 year	2021-09-06
24		Two-Lime V-Network	ESH3-Z5	893045/017	R&S	1 year	2021-03-16
25		UNIVERSAL RADIO COMMUNICATION TESTER	CMU200	106243	R&S	1 year	2021-03-16
26		Highpass Filter	WHKX1.5/15G-10SS	74	Wainwright Instruments	1 year	2021-03-16
27		Highpass Filter	WHKX3.0/18G-10SS	118	Wainwright Instruments	1 year	2021-03-16
28		OSP120 BASE UNIT	OSP120	101230	R&S	1 year	2021-03-16
29		Signal Generator(100 kHz ~ 40 GHz)	SMB100A03	177621	R&S	1 year	2021-03-16
30		Signal Analyzer (10 Hz ~ 40 GHz)	FSV40	101367	R&S	1 year	2021-03-16
31	■	Active Loop Antenna	FMZB 1519	1519-031	SCHWARZBECK	2 year	2021-02-26

Copyright © 2018, LTA Co., Ltd.