TEST REPORT

Report No.:	BCTC2310579468-1E
Applicant:	Shenzhen SwellPro Technology CO., LTD
Product Name:	Fisherman FD3
Model/Type reference:	FD3
Tested Date:	2023-10-16 to 2023-11-03
Issued Date:	2023-11-07

Shenzhen BCTC Testing Co., Ltd.

FCC ID: 2AQRL-FD3

Product Name:	Fisherman FD3
Trademark:	SwellPro
Model/Type reference:	FD3 FD3+, FD1+
Prepared For:	Shenzhen SwellPro Technology CO., LTD
Address:	5 Floor 2 Building ZhuoLin Industrial Park, LiaoKeng Third Industrial park, LangXin Community, ShiYan Street, Baoan District, Shenzhen,China, 518000
Manufacturer:	Shenzhen SwellPro Technology CO., LTD
Address:	5 Floor 2 Building ZhuoLin Industrial Park, LiaoKeng Third Industrial park, LangXin Community, ShiYan Street, Baoan District, Shenzhen,China, 518000
Prepared By:	Shenzhen BCTC Testing Co., Ltd.
Address:	1-2/F., Building B, Pengzhou Industrial Park, No.158, Fuyuan 1st Road, Zhancheng, Fuhai Subdistrict, Bao'an District, Shenzhen, Guangdong, China
Sample Received Date:	2023-10-13
Sample tested Date:	2023-10-16 to 2023-11-03
Issue Date:	2023-11-07
Report No.:	BCTC2310579468-1E
Test Standards:	FCC Part15.247 ANSI C63.10-2013
Test Results:	PASS
Remark:	This is SRD-2.4GHz radio test report.

Tested by:

Eric Yang/Project Handler

Approved by:

Zero Zhou/Reviewer

The test report is effective only with both signature and specialized stamp. This result(s) shown in this report refer only to the sample(s) tested. Without written approval of Shenzhen BCTC Testing Co., Ltd, this report can't be reproduced except in full. The tested sample(s) and the sample information are provided by the client.

Table Of Content

Test Report Declaration Page
1. Version 5
2. Test Summary 6
3. Measurement Uncertainty 7
4. Product Information And Test Setup 8
4.1 Product Information 8
4.2 Test Setup Configuration 8
4.4 Channel List 9
4.5 Test Mode 10
4.6 Table Of Parameters Of Text Software Setting 11
5. Test Facility And Test Instrument Used 12
5.1 Test Facility 12
5.2 Test Instrument Used 12
6. Conducted Emissions 14
6.1 Block Diagram Of Test Setup 14
6.2 Limit 14
6.3 Test Procedure 14
6.4 EUT Operating Conditions 15
6.5 Test Result 15
7. Radiated Emissions 16
7.1 Block Diagram Of Test Setup 16
7.2 Limit 17
7.3 Test Procedure 18
7.4 EUT Operating Conditions 19
7.5 Test Result 19
8. Radiated Band Emission Measurement And Restricted Bands Of Operation 23
8.1 Block Diagram Of Test Setup 23
8.2 Limit 23
8.3 Test Procedure 24
8.4 EUT operating Conditions 24
8.5 Test Result 25
9. Power Spectral Density Test 26
9.1 Block Diagram Of Test Setup 26
9.2 Limit 26
9.3 Test Procedure 26
9.4 EUT Operating Conditions 26
9.5 Test Result 27
10. Bandwidth Test 29
10.1 Block Diagram Of Test Setup 29
10.2 Limit 29
10.3 Test Procedure 29
10.4 EUT Operating Conditions 29
10.5 Test Result 30
11. Peak Output Power Test 32
11.1 Block Diagram Of Test Setup 32

11.2 Limit 32
11.3 Test Procedure 32
11.4 EUT Operating Conditions 32
11.5 Test Result.....32
12. 100 KHz Bandwidth Of Frequency Band Edge.....33
12.1 Block Diagram Of Test Setup.....33
12.2 Limit 33
12.3 Test Procedure 33
12.4 EUT Operating Conditions 33
12.5 Test Result.....34
13. Antenna Requirement 36
13.1 Limit 36
13.2 Test Result.....36
14. EUT Photographs.....37
15. EUT Test Setup Photographs.....38

(Note: N/A Means Not Applicable)

1. Version

Report No.	Issue Date	Description	Approved
BCTC2310579468-1E	2023-11-03	Original	Valid

2. Test Summary

The Product has been tested according to the following specifications:

No.	Test Parameter	Clause No	Results
1	Conducted Emission	15.207	N/A[1]
2	6dB Bandwidth	15.247 (a)(2)	PASS
3	Peak Output Power	15.247 (b)	PASS
4	Radiated Spurious Emission	15.247 (d), 15.205	PASS
5	Power Spectral Density	15.247 (e)	PASS
6	Restricted Band of Operation	15.205	PASS
7	Band Edge (Out of Band Emissions)	15.247(d)	PASS
8	Antenna Requirement	15.203	PASS

Remark:
1. The EUT is powered by the DC only, the test item is not applicable.

3. Measurement Uncertainty

Where relevant, the following measurement uncertainty levels have been estimated for tests performed on the Product as specified in CISPR 16-4-2. This uncertainty represents an expanded uncertainty expressed at approximately the 95% confidence level using a coverage factor of k=2.

No.	Item	Uncertainty
1	3m chamber Radiated spurious emission(9kHz-30MHz)	U=3.7dB
2	3m chamber Radiated spurious emission(30MHz-1GHz)	U=4.3dB
3	3m chamber Radiated spurious emission(1GHz-18GHz)	U=4.5dB
4	3m chamber Radiated spurious emission(18GHz-40GHz)	U=3.34dB
5	Conducted Emission(150kHz-30MHz)	U=3.20dB
6	Conducted Adjacent channel power	U=1.38dB
7	Conducted output power uncertainty Above 1G	U=1.576dB
8	Conducted output power uncertainty below 1G	U=1.28dB
9	Humidity uncertainty	U=5.3%
10	Temperature uncertainty	U=0.59℃
11	Power spectral density	U=1.19dB
12	Conducted spurious emissions	U=0.55dB
13	Occupied bandwidth	U=3.46%

4. Product Information And Test Setup

4.1 Product Information

Model/Type reference:	FD3 FD3+, FD1+
Model differences:	All the model are the same circuit and RF module, except model names.
Operation Frequency:	2402MHz-2478MHz
Type of Modulation:	GFSK
Number Of Channel	77CH
Antenna installation:	External antenna
Antenna Gain:	2.26 dBi
Ratings:	DC 23.1V From Battery

4.2 Test Setup Configuration

See test photographs attached in *EUT TEST SETUP PHOTOGRAPHS* for the actual connections between Product and support equipment.

Radiated Spurious Emission:

E-1
EUT

4.3 Support Equipment

No.	Device Type	Brand	Model	Series No.	Note

Item	Shielded Type	Ferrite Core	Length	Note

Notes:

1. All the equipment/cables were placed in the worst-case configuration to maximize the emission during the test.
2. Grounding was established in accordance with the manufacturer's requirements and conditions for the intended use.

4.4 Channel List

CH	Frequency (MHz)	CH	Frequency (MHz)	CH	Frequency (MHz)	CH	Frequency (MHz)
0	2402	1	2403	2	2404	3	2405
4	2406	5	2407	6	2408	7	2409
8	2410	9	2411	10	2412	11	2413
12	2414	13	2415	14	2416	15	2417
16	2418	17	2419	18	2420	19	2421
20	2422	21	2423	22	2424	23	2425
24	2426	25	2427	26	2428	27	2429
28	2430	29	2431	30	2432	31	2433
32	2434	33	2435	34	2436	35	2437
36	2438	37	2439	38	2440	39	2441
40	2442	41	2443	42	2444	43	2445
44	2446	45	2447	46	2448	47	2449
48	2450	49	2451	50	2452	51	2453
52	2454	53	2455	54	2456	55	2457
56	2458	57	2459	58	2460	59	2461
60	2462	61	2463	62	2464	63	2465
64	2466	65	2467	66	2468	67	2469
68	2470	69	2471	70	2472	71	2473
72	2474	73	2475	74	2476	75	2477
76	2478	/	/	/	/	/	/

4.5 Test Mode

To investigate the maximum EMI emission characteristics generates from EUT, the test system was pre-scanning tested base on the consideration of following EUT operation mode or test configuration mode which possible have effect on EMI emission level. Each of these EUT operation mode(s) or test configuration mode(s) mentioned above was evaluated respectively.

For All Mode	Description	Modulation Type
Mode 1	CH00	GFSK
Mode 2	CH48	
Mode 3	CH76	
Mode 4	Link mode (Radiated emission)	

Note:
(1) The measurements are performed at the highest, middle, lowest available channels.
(2) Fully-charged battery is used during the test

4.6 Table Of Parameters Of Text Software Setting

During testing channel & power controlling software provided by the customer was used to control the operating channel as well as the output power level. The RF output power selection is for the setting of RF output power expected by the customer and is going to be fixed on the firmware of the final end product power parameters

Test software Version	CMD		
Frequency	2402 MHz	2450 MHz	2478 MHz
Parameters	DEF	DEF	DEF

5. Test Facility And Test Instrument Used

5.1 Test Facility

All measurement facilities used to collect the measurement data are located at Shenzhen BCTC Testing Co., Ltd. Address: 1-2/F., Building B, Pengzhou Industrial Park, No.158, Fuyuan 1st Road, Zhancheng, Fuhai Subdistrict, Bao'an District, Shenzhen, Guangdong, China. The site and apparatus are constructed in conformance with the requirements of ANSI C63.4 and CISPR 16-1-1 other equivalent standards.
FCC Test Firm Registration Number: 712850
FCC Designation Number: CN1212
ISED Registered No.: 23583
ISED CAB identifier: CN0017

5.2 Test Instrument Used

RF Conducted Test					
Equipment	**Manufacturer**	**Model#**	**Serial#**	**Last Cal.**	**Next Cal.**
Power Meter	Keysight	E4419	\	May 15, 2023	May 14, 2024
Power Sensor (AV)	Keysight	E9300A	\	May 15, 2023	May 14, 2024
Signal Analyzer20kHz-26.5GHz	Keysight	N9020A	MY49100060	May 15, 2023	May 14, 2024
Spectrum Analyzer9kHz-40GHz	R&S	FSP40	100363	May 15, 2023	May 14, 2024

Radiated Emissions Test (966 Chamber01)					
Equipment	**Manufacturer**	**Model#**	**Serial#**	**Last Cal.**	**Next Cal.**
966 chamber	ChengYu	966 Room	966	May 15, 2023	May 14, 2026
Receiver	R&S	ESR3	102075	May 15, 2023	May 14, 2024
Receiver	R&S	ESRP	101154	May 15, 2023	May 14, 2024
Amplifier	Schwarzbeck	BBV9744	9744-0037	May 15, 2023	May 14, 2024
TRILOG Broadband Antenna	Schwarzbeck	VULB9163	942	May 29, 2023	May 28, 2024
Loop Antenna(9KHz -30MHz)	Schwarzbeck	FMZB1519B	00014	May 31, 2023	May 30, 2024
Amplifier	SKET	LAPA_01G18 G-45dB	SK2021040901	May 15, 2023	May 14, 2024
Horn Antenna	Schwarzbeck	BBHA9120D	1541	May 31, 2023	May 30, 2024
Amplifier(18G Hz-40GHz)	MITEQ	TTA1840-35-HG	2034381	May 15, 2023	May 14, 2024
Horn Antenna(18G Hz-40GHz)	Schwarzbeck	BBHA9170	00822	May 31, 2023	May 30, 2024
Spectrum Analyzer9kHz-40GHz	R&S	FSP40	100363	May 15, 2023	May 14, 2024
Software	Frad	EZ-EMC	FA-03A2 RE	\	\

6. Conducted Emissions

6.1 Block Diagram Of Test Setup

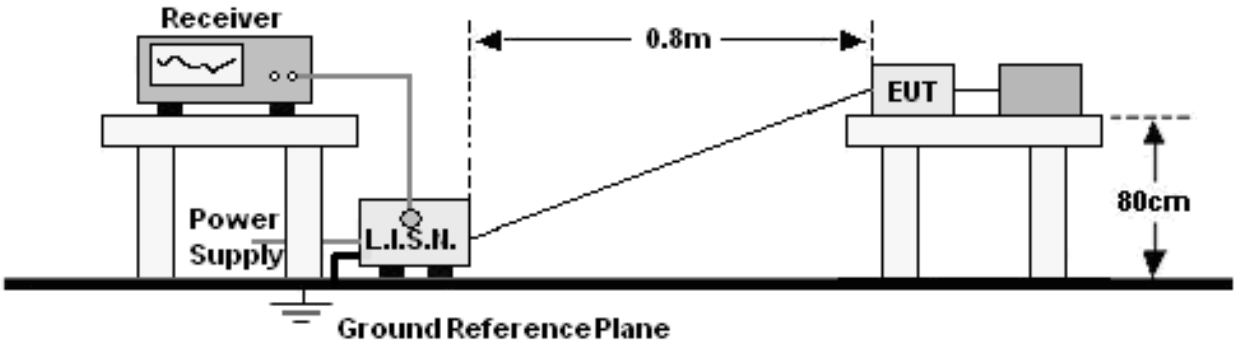

6.2 Limit

FREQUENCY (MHz)	Limit (dBuV)	
	Quas-peak	Average
0.15 -0.5	66 - 56 *	56 - 46 *
0.50 -5.0	56.00	46.00
5.0 -30.0	60.00	50.00
Notes: 1. *Decreasing linearly with logarithm of frequency. 2. The lower limit shall apply at the transition frequencies.		

6.3 Test Procedure

Receiver Parameters	Setting
Attenuation	10 dB
Start Frequency	0.15 MHz
Stop Frequency	30 MHz
IF Bandwidth	9 kHz

a. The Product was placed on a nonconductive table 0.8 m above the horizontal ground reference plane, and 0.4 m from the vertical ground reference plane, and connected to the main through Line Impedance Stability Network (L.I.S.N).
b. The RBW of the receiver was set at 9 kHz in 150 kHz ~ 30MHz with Peak and AVG detector in Max Hold mode. Run the receiver's pre-scan to record the maximum disturbance generated from Product in all power lines in the full band.
c. For each frequency whose maximum record was higher or close to limit, measure its QP and AVG values and record.

6.4 EUT Operating Conditions

The EUT was configured for testing in a typical fashion (as a customer would normally use it). The EUT has been programmed to continuously transmit during test. This operating condition was tested and used to collect the included data.

6.5 Test Result

The EUT is powered by the DC only, the test item is not applicable.

7. Radiated Emissions

7.1 Block Diagram Of Test Setup

（A）Radiated Emission Test-Up Frequency Below 30MHz

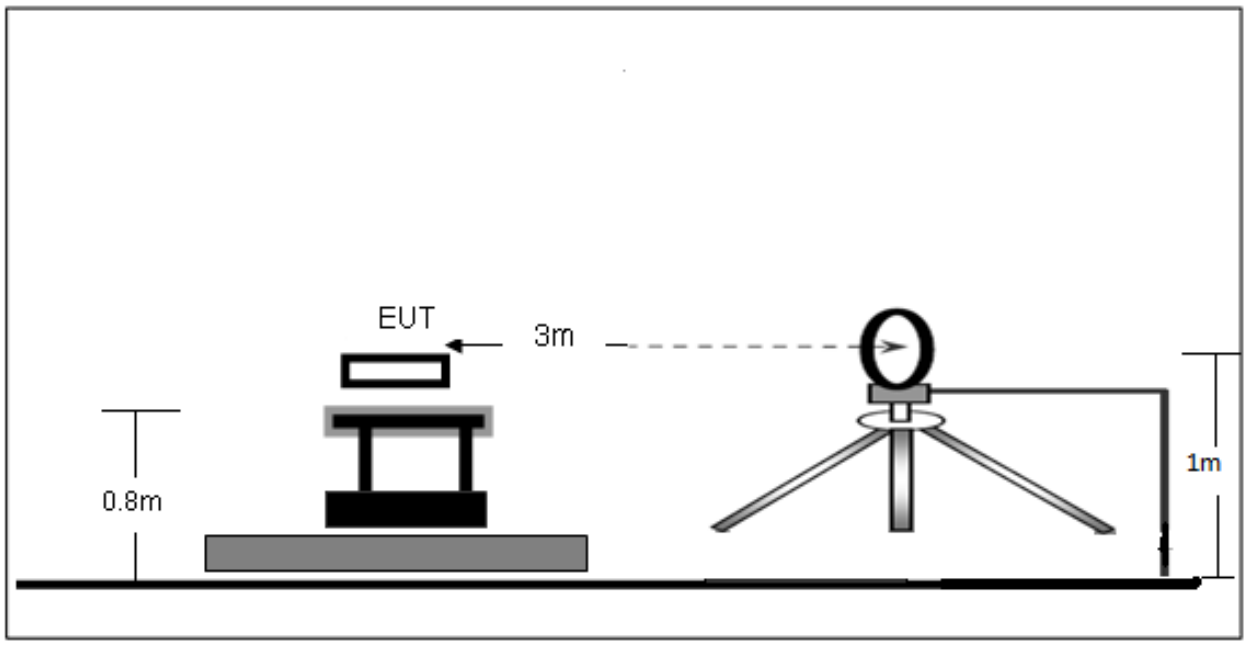

（B）Radiated Emission Test-Up Frequency 30MHz~1GHz

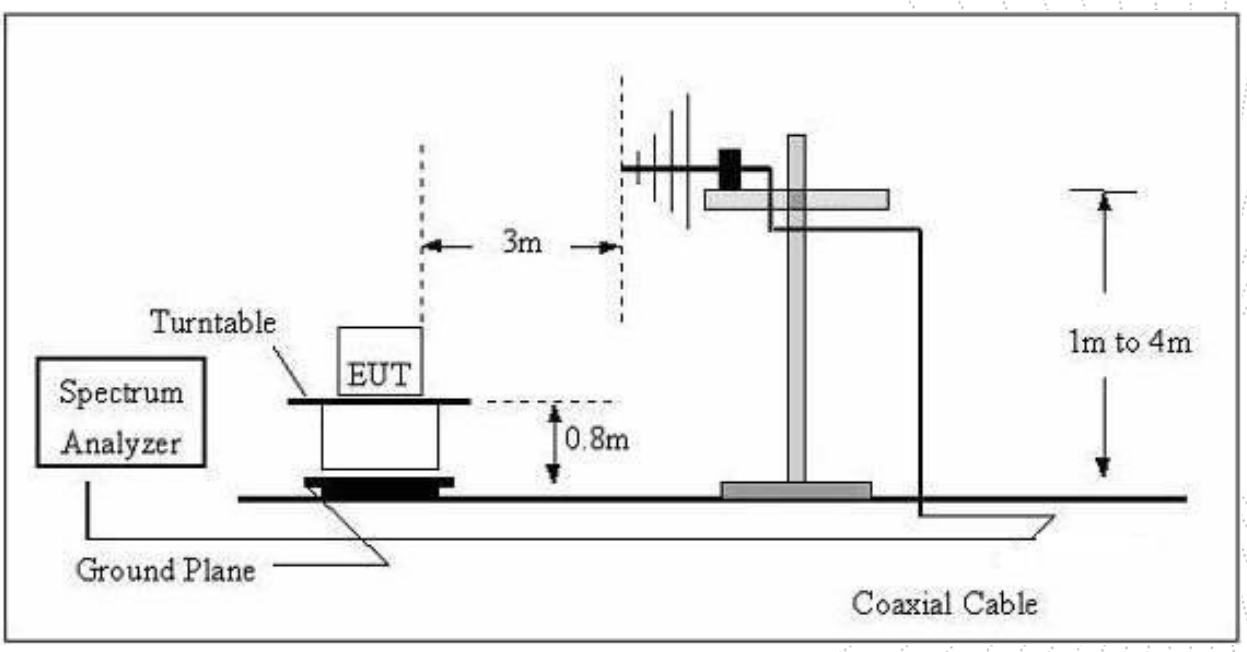

（C）Radiated Emission Test-Up Frequency Above 1GHz

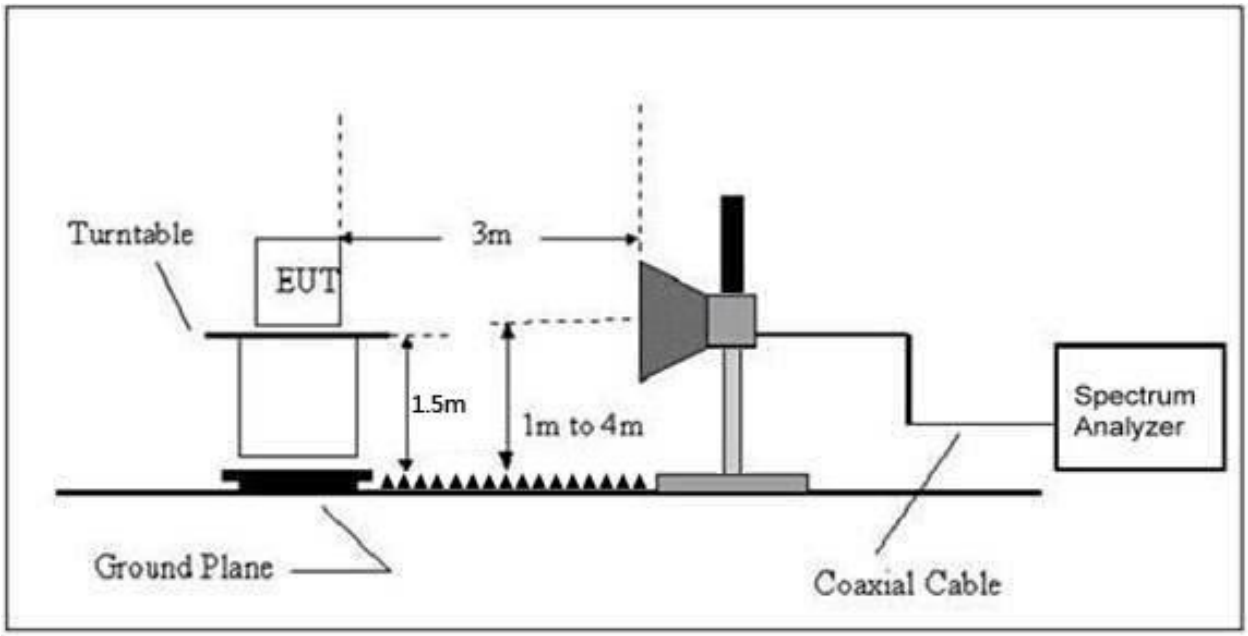

7.2 Limit

20dBc in any 100 kHz bandwidth outside the operating frequency band. In case the emission fall within the restricted band specified on 15.205(a), then the 15.209(a) limit in the table below has to be followed.

Frequency	Field Strength	Distance	Field Strength Limit at 3m Distance	
(MHz)	uV/m	(m)	uV/m	dBuV/m
0.009 ~ 0.490	2400/F(kHz)	300	10000 * 2400/F(kHz)	$20\log^{(2400/F(kHz))} + 80$
0.490 ~ 1.705	24000/F(kHz)	30	100 * 24000/F(kHz)	$20\log^{(24000/F(kHz))} + 40$
1.705 ~ 30	30	30	100 * 30	$20\log^{(30)} + 40$
30 ~ 88	100	3	100	$20\log^{(100)}$
88 ~ 216	150	3	150	$20\log^{(150)}$
216 ~ 960	200	3	200	$20\log^{(200)}$
Above 960	500	3	500	$20\log^{(500)}$

LIMITS OF RADIATED EMISSION MEASUREMENT (Above 1000MHz)

FREQUENCY (MHz)	Limit (dBuV/m) (at 3M)	
	PEAK	AVERAGE
Above 1000	74	54

Notes:
(1)The limit for radiated test was performed according to FCC PART 15C.
(2)The tighter limit applies at the band edges.
(3) Emission level (dBuV/m)=20log Emission level (uV/m).

FREQUENCY RANGE OF RADIATED MEASUREMENT (For unintentional radiators)

Highest frequency generated or Upper frequency of measurement used in the device or on which the device operates or tunes (MHz)	Range (MHz)
Below 1.705	30
1.705 – 108	1000
108 – 500	2000
500 – 1000	5000
Above 1000	5th harmonic of the highest frequency or 40 GHz, whichever is lower

7.3 Test Procedure

Receiver Parameter	Setting
Attenuation	Auto
9kHz~150kHz	RBW 200Hz for QP
150kHz~30MHz	RBW 9kHz for QP
30MHz~1000MHz	RBW 120kHz for QP

Spectrum Parameter	Setting
1-25GHz	RBW 1 MHz /VBW 1 MHz for Peak, RBW 1 MHz / VBW 10Hz for Average

Below 1GHz test procedure as below:
a. The EUT was placed on the top of a rotating table 0.8 meters above the ground at a 3 meter semi-anechoic chamber. The table was rotated 360 degrees to determine the position of the highest radiation.
b. The EUT was set 3 meters away from the interference-receiving antenna, which was mounted on the top of a variable-height antenna tower.
c. The antenna height is varied from one meter to four meters above the ground to determine the maximum value of the field strength. Both horizontal and vertical polarizations of the antenna are set to make the measurement.
d. For each suspected emission, the EUT was arranged to its worst case and then the antenna was tuned to heights from 1 meter to 4 meters (for the test frequency of below 30MHz, the antenna was tuned to heights 1 meter) and the rotatable table was turned from 0 degrees to 360 degrees to find the maximum reading.
e. The test-receiver system was set to Peak Detect Function and Specified Bandwidth with Maximum Hold Mode.
f. If the emission level of the EUT in peak mode was 10dB lower than the limit specified, then testing could be stopped and the peak values of the EUT would be reported. Otherwise the emissions that did not have 10dB margin would be re-tested one by one using peak, quasi-peak or average method as specified and then reported in a data sheet.
Above 1GHz test procedure as below:
g. Different between above is the test site, change from Semi- Anechoic Chamber to fully Anechoic Chamber and change form table 0.8 metre to 1.5 metre(Above 18GHz the distance is 1 meter and table is 1.5 metre).
h. Test the EUT in the lowest channel ,the middle channel ,the Highest channel.
Note:
Both horizontal and vertical antenna polarities were tested and performed pretest to three orthogonal axis. The worst case emissions were reported.

Above 1GHz test procedure as below:
a. The EUT was placed on the top of a rotating table 1.5 meters above the ground at a 3 meter chamber. The table was rotated 360 degrees to determine the position of the highest radiation.
b. The EUT was set 3 meters away from the interference-receiving antenna, which was mounted on the top of a variable-height antenna tower.
c. The antenna height is varied from one meter to four meters above the ground to determine the maximum value of the field strength. Both horizontal and vertical polarizations of the antenna are set to make the measurement.
d. For each suspected emission, the EUT was arranged to its worst case and then the antenna was tuned to heights from 1 meter to 4 meters and the rota table was turned from 0 degrees to 360 degrees to find the maximum reading.
e. The test-receiver system was set to Peak Detect Function and Specified Bandwidth with Maximum Hold Mode.
f. If the emission level of the EUT in peak mode was 10dB lower than the limit specified, then testing could be stopped and the peak values of the EUT would be reported. Otherwise the emissions that did not have 10dB margin would be re-tested one by one using peak, quasi-peak or average method as specified and then reported in a data sheet.
g. Test the EUT in the lowest channel, the Highest channel.
Note:
Both horizontal and vertical antenna polarities were tested and performed pretest to three orthogonal axis. The worst case emissions were reported.

7.4 EUT Operating Conditions

The EUT was configured for testing in a typical fashion (as a customer would normally use it). The EUT has been programmed to continuously transmit during test. This operating condition was tested and used to collect the included data.

7.5 Test Result

Below 30MHz

Temperature:	26℃	Relative Humidity:	24%
Pressure:	101KPa	Test Voltage :	DC 23.1V
Test Mode:	Mode 4	Polarization :	--

Freq.	Reading	Limit	Margin	State
(MHz)	(dBuV/m)	(dBuV/m)	(dB)	P/F
--	--	--	--	PASS
--	--	--	--	PASS

Note:
The amplitude of spurious emissions which are attenuated by more than 20dB below the permissible value has no need to be reported.
Distance extrapolation factor =40 log (specific distance/test distance)(dB);
Limit line = specific limits(dBuv) + distance extrapolation factor.

Between 30MHz – 1GHz

Temperature:	26℃	Relative Humidity:	54%
Pressure:	101KPa	Phase :	Horizontal
Test Mode:	Mode 4	Test Voltage :	DC 23.1V

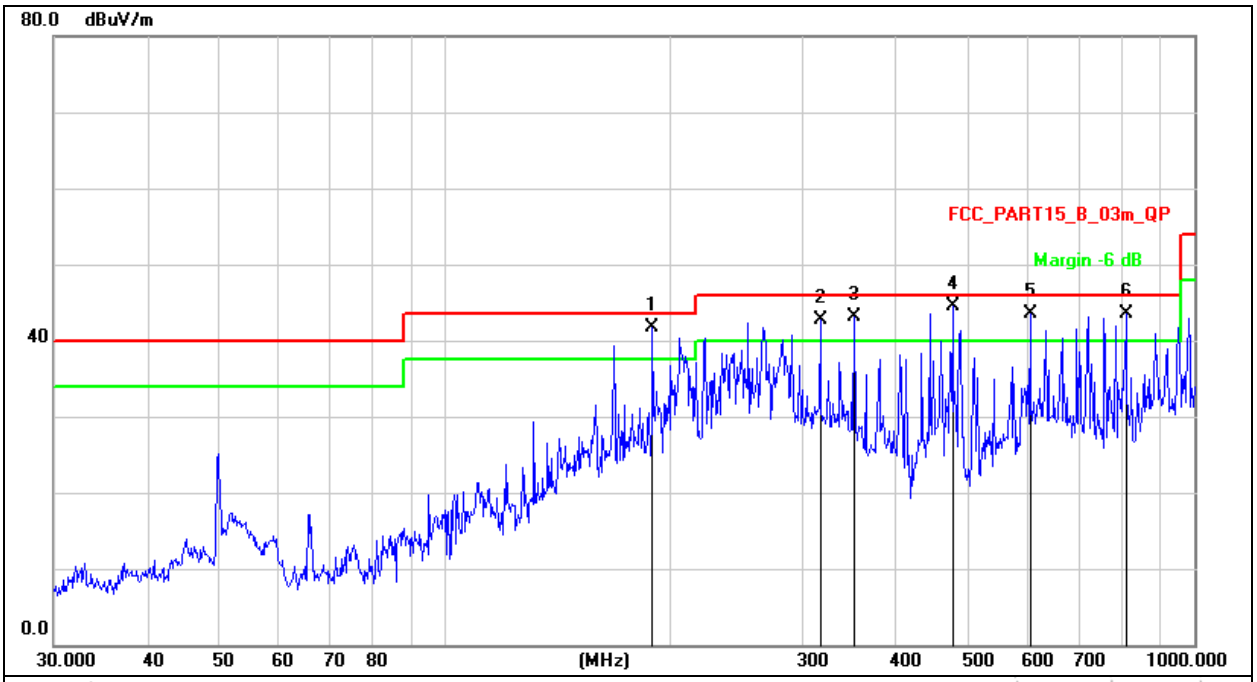

Remark:
1. Factor = Antenna Factor + Cable Loss – Pre-amplifier.
2. Measurement = Reading Level + Correct Factor
3. Over = Measurement - Limit

No.	Mk.	Freq.	Reading Level	Correct Factor	Measure-ment	Limit	Over	
		MHz	dBuV	dB	dBuV/m	dB/m	dB	Detector
1	!	189.0742	58.22	-16.53	41.69	43.50	-1.81	QP
2	!	316.5889	55.31	-12.66	42.65	46.00	-3.35	QP
3	!	351.7078	54.60	-11.46	43.14	46.00	-2.86	QP
4	*	475.4990	53.76	-9.22	44.54	46.00	-1.46	QP
5	!	603.5392	50.37	-6.96	43.41	46.00	-2.59	QP
6	!	810.2653	47.83	-4.31	43.52	46.00	-2.48	QP

Temperature:	26℃	Relative Humidity:	54%
Pressure:	101KPa	Phase :	Vertical
Test Mode:	Mode 4	Test Voltage :	DC 23.1V

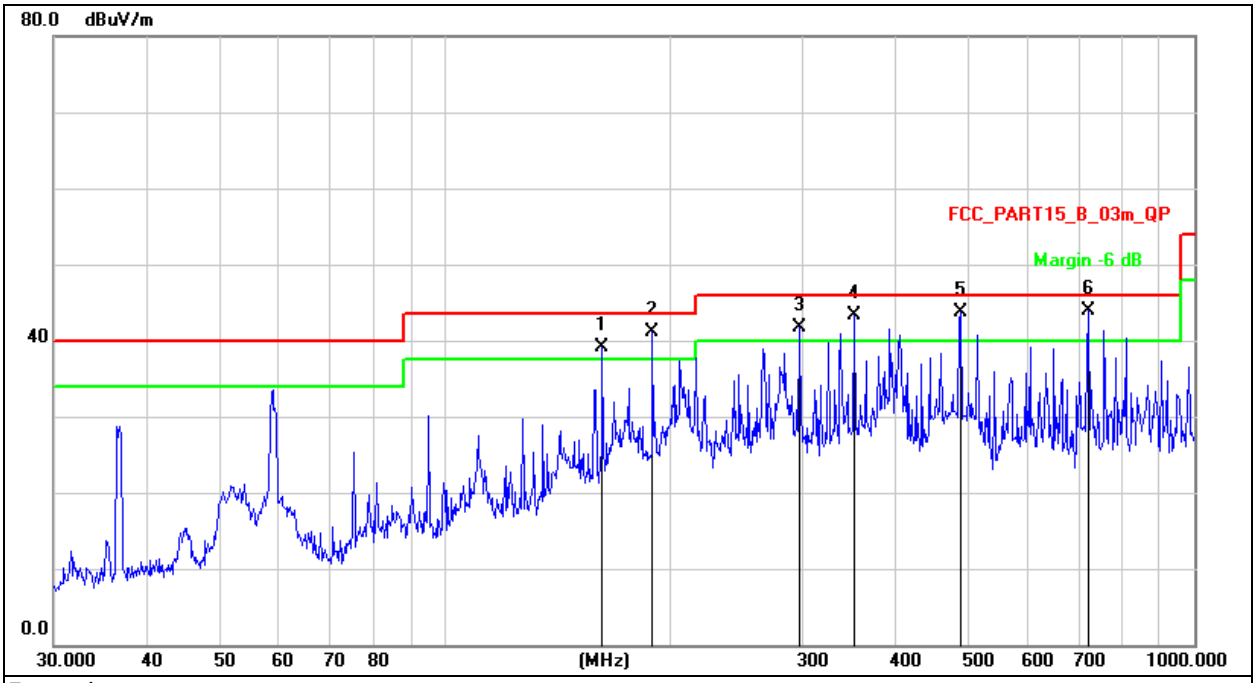

Remark:
1. Factor = Antenna Factor + Cable Loss – Pre-amplifier.
2. Measurement = Reading Level + Correct Factor
3. Over = Measurement - Limit

No.	Mk.	Freq.	Reading Level	Correct Factor	Measure-ment	Limit	Over	
		MHz	dBuV	dB	dBuV/m	dB/m	dB	Detector
1	!	162.0414	57.68	-18.54	39.14	43.50	-4.36	QP
2	!	189.0742	57.73	-16.53	41.20	43.50	-2.30	QP
3	!	297.2241	54.99	-13.30	41.69	46.00	-4.31	QP
4	!	351.7078	54.77	-11.46	43.31	46.00	-2.69	QP
5	!	487.3150	52.55	-8.93	43.62	46.00	-2.38	QP
6	*	721.7259	49.33	-5.40	43.93	46.00	-2.07	QP

Between 1GHz – 25GHz

GFSK							
Polar (H/V)	Frequency (MHz)	Reading Level (dBuV/m)	Correct Factor (dB)	Measure-ment (dBuV/m)	Limits (dBuV/m)	Over (dB)	Detector Type
Low channel							
V	4804.00	72.17	-19.99	52.18	74.00	-21.82	PK
V	4804.00	63.45	-19.99	43.46	54.00	-10.54	AV
V	7206.00	64.43	-14.22	50.21	74.00	-23.79	PK
V	7206.00	54.25	-14.22	40.03	54.00	-13.97	AV
H	4804.00	70.65	-19.99	50.66	74.00	-23.34	PK
H	4804.00	59.92	-19.99	39.93	54.00	-14.07	AV
H	7206.00	61.46	-14.22	47.24	74.00	-26.76	PK
H	7206.00	52.66	-14.22	38.44	54.00	-15.56	AV
Middle channel							
V	4900.00	68.84	-19.80	49.04	74.00	-24.96	PK
V	4900.00	60.64	-19.80	40.84	54.00	-13.16	AV
V	7350.00	58.86	-13.82	45.04	74.00	-28.96	PK
V	7350.00	49.55	-13.82	35.73	54.00	-18.27	AV
H	4900.00	64.74	-19.80	44.94	74.00	-29.06	PK
H	4900.00	54.58	-19.80	34.78	54.00	-19.22	AV
H	7350.00	56.68	-13.82	42.86	74.00	-31.14	PK
H	7350.00	48.92	-13.82	35.10	54.00	-18.90	AV
High channel							
V	4956.00	71.24	-19.69	51.55	74.00	-22.45	PK
V	4956.00	62.33	-19.69	42.64	54.00	-11.36	AV
V	7434.00	62.89	-13.58	49.31	74.00	-24.69	PK
V	7434.00	52.73	-13.58	39.15	54.00	-14.85	AV
H	4956.00	68.56	-19.69	48.87	74.00	-25.13	PK
H	4956.00	57.94	-19.69	38.25	54.00	-15.75	AV
H	7434.00	61.87	-13.58	48.29	74.00	-25.71	PK
H	7434.00	53.74	-13.58	40.16	54.00	-13.84	AV

Remark:
1.Emission Level = Meter Reading + Factor,
Factor = Antenna Factor + Cable Loss – Pre-amplifier.
Over= Emission Level - Limit
2.If peak below the average limit, the average emission was no test.
3. In restricted bands of operation, The spurious emissions below the permissible value more than 20dB
4. The amplitude of spurious emissions which are attenuated by more than 20dB below the permissible value has no need to be reported.
5.This report only shows the worst case test data.

8. Radiated Band Emission Measurement And Restricted Bands Of Operation

8.1 Block Diagram Of Test Setup

Radiated Emission Test-Up Frequency Above 1GHz

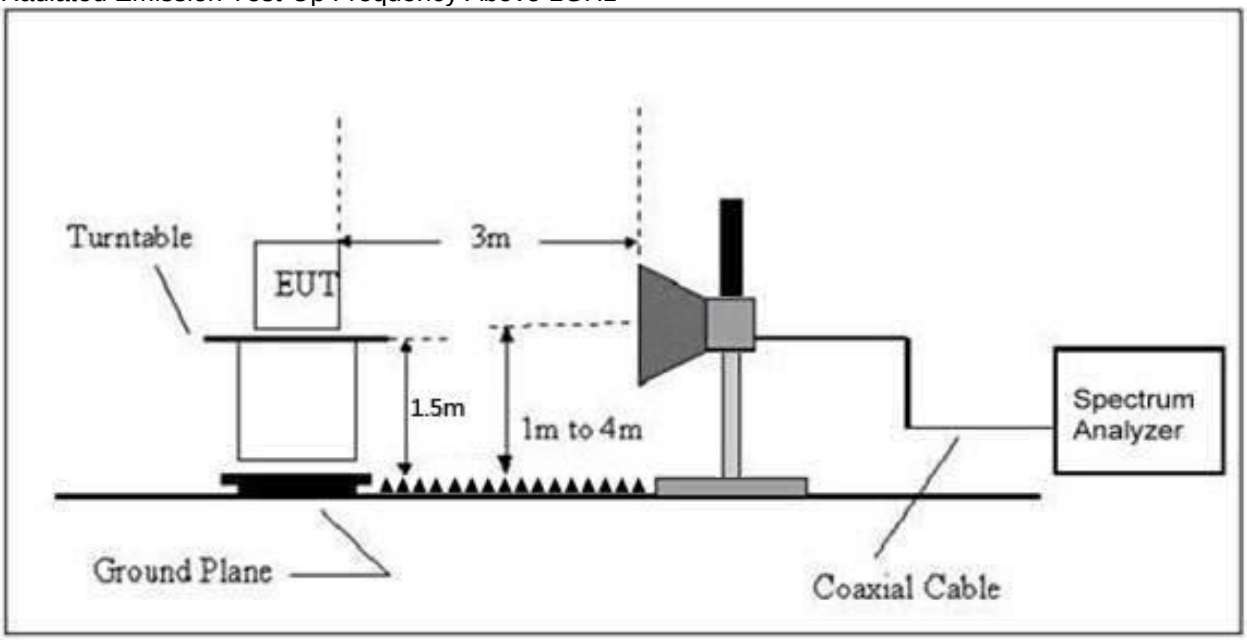

8.2 Limit

FCC Part15 C Section 15.209 and 15.205

(a) Except as shown in paragraph (d) of this section, only spurious emissions are permitted in any of the frequency bands listed below:

MHz	MHz	MHz	GHz
0.090-0.110	16.42-16.423	399.9-410	4.5-5.15
[1]0.495-0.505	16.69475-16.69525	608-614	5.35-5.46
2.1735-2.1905	16.80425-16.80475	960-1240	7.25-7.75
4.125-4.128	25.5-25.67	1300-1427	8.025-8.5
4.17725-4.17775	37.5-38.25	1435-1626.5	9.0-9.2
4.20725-4.20775	73-74.6	1645.5-1646.5	9.3-9.5
6.215-6.218	74.8-75.2	1660-1710	10.6-12.7
6.26775-6.26825	108-121.94	1718.8-1722.2	13.25-13.4
6.31175-6.31225	123-138	2200-2300	14.47-14.5
8.291-8.294	149.9-150.05	2310-2390	15.35-16.2
8.362-8.366	156.52475-156.52525	2483.5-2500	17.7-21.4
8.37625-8.38675	156.7-156.9	2690-2900	22.01-23.12
8.41425-8.41475	162.0125-167.17	3260-3267	23.6-24.0
12.29-12.293	167.72-173.2	3332-3339	31.2-31.8
12.51975-12.52025	240-285	3345.8-3358	36.43-36.5
12.57675-12.57725	322-335.4	3600-4400	([2])
13.36-13.41			

LIMITS OF RADIATED EMISSION MEASUREMENT (Above 1000MHz)

FREQUENCY (MHz)	Limit (dBuV/m) (at 3M)	
	PEAK	AVERAGE
Above 1000	74	54

Notes:
(1)The limit for radiated test was performed according to FCC PART 15C.
(2)The tighter limit applies at the band edges.
(3)Emission level (dBuV/m)=20log Emission level (uV/m).

8.3 Test Procedure

Receiver Parameter	Setting
Attenuation	Auto
Start Frequency	2300MHz
Stop Frequency	2520
RB / VB (emission in restricted band)	1 MHz / 1 MHz for Peak, 1 MHz / 10Hz for Average

Above 1GHz test procedure as below:
a. The EUT was placed on the top of a rotating table 1.5 meters above the ground at a 3 meter chamber. The table was rotated 360 degrees to determine the position of the highest radiation.
b. The EUT was set 3 meters away from the interference-receiving antenna, which was mounted on the top of a variable-height antenna tower.
c. The antenna height is varied from one meter to four meters above the ground to determine the maximum value of the field strength. Both horizontal and vertical polarizations of the antenna are set to make the measurement.
d. For each suspected emission, the EUT was arranged to its worst case and then the antenna was tuned to heights from 1 meter to 4 meters and the rota table was turned from 0 degrees to 360 degrees to find the maximum reading.
e. The test-receiver system was set to Peak Detect Function and Specified Bandwidth with Maximum Hold Mode.
f. If the emission level of the EUT in peak mode was 10dB lower than the limit specified, then testing could be stopped and the peak values of the EUT would be reported. Otherwise the emissions that did not have 10dB margin would be re-tested one by one using peak, quasi-peak or average method as specified and then reported in a data sheet.
g. Test the EUT in the lowest channel, the Highest channel.
Note:
Both horizontal and vertical antenna polarities were tested and performed pretest to three orthogonal axis. The worst case emissions were reported.

8.4 EUT operating Conditions

The EUT was configured for testing in a typical fashion (as a customer would normally use it). The EUT has been programmed to continuously transmit during test. This operating condition was tested and used to collect the included data.

8.5 Test Result

	Polar (H/V)	Frequency (MHz)	Reading Level (dBuV/m)	Correct Factor (dB)	Measure-ment (dBuV/m)	Limits (dBuV/m)		Result
					PK	PK	AV	
GFSK	Low Channel 2402MHz							
	H	2390.00	72.97	-25.43	47.54	74.00	54.00	PASS
	H	2400.00	75.95	-25.40	50.55	74.00	54.00	PASS
	V	2390.00	72.62	-25.43	47.19	74.00	54.00	PASS
	V	2400.00	73.79	-25.40	48.39	74.00	54.00	PASS
	High Channel 2478MHz							
	H	2483.50	73.04	-25.15	47.89	74.00	54.00	PASS
	H	2500.00	69.78	-25.10	44.68	74.00	54.00	PASS
	V	2483.50	72.46	-25.15	47.31	74.00	54.00	PASS
	V	2500.00	67.87	-25.10	42.77	74.00	54.00	PASS

Remark:
1. Emission Level = Meter Reading + Factor,
Factor = Antenna Factor + Cable Loss – Pre-amplifier.
Over= Emission Level – Limit
2. If the PK measured levels comply with average limit, then the average level were deemed to comply with average limit.
3 In restricted bands of operation, The spurious emissions below the permissible value more than 20dB
4. The amplitude of spurious emissions which are attenuated by more than 20dB below the permissible value has no need to be reported.
5. This report only shows the worst case test data.

9. Power Spectral Density Test

9.1 Block Diagram Of Test Setup

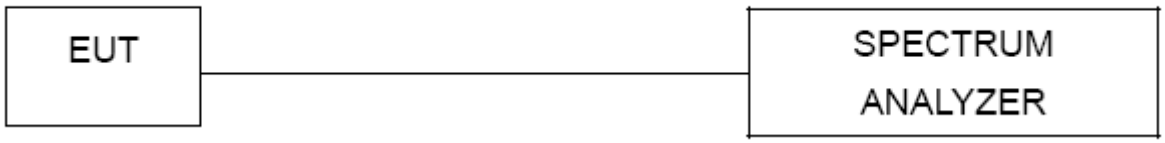

9.2 Limit

FCC Part15 (15.247) , Subpart C				
Section	Test Item	Limit	Frequency Range (MHz)	Result
15.247	Power Spectral Density	8 dBm (in any 3KHz)	2400-2483.5	PASS

LIMITS OF RADIATED EMISSION MEASUREMENT (Above 1000MHz)

9.3 Test Procedure

1. Set analyzer center frequency to DTS channel center frequency.
2. Set the span to 1.5 times the DTS bandwidth.
3. Set the RBW to: 3 kHz
4. Set the VBW ≥ 3 x RBW.
5. Detector = peak.
6. Sweep time = auto couple.
7. Trace mode = max hold.
8. Allow trace to fully stabilize.
9. Use the peak marker function to determine the maximum amplitude level within the RBW.
10. If measured value exceeds limit, reduce RBW (no less than 3 kHz) and repeat.

9.4 EUT Operating Conditions

The EUT tested system was configured as the statements of 4.6 Unless otherwise a special operating condition is specified in the follows during the testing.
Note: Power Spectral Density(dBm)=Reading+Cable Loss

9.5 Test Result

Temperature：	26℃	Relative Humidity：	54%
Test Mode ：	GFSK	Test Voltage ：	DC 23.1V

Frequency	Power Spectral Density(dBm/3kHz)	Limit (dBm/3kHz)	Result
2402 MHz	-5.334	8	PASS
2450 MHz	-4.206	8	PASS
2478 MHz	-4.314	8	PASS

L

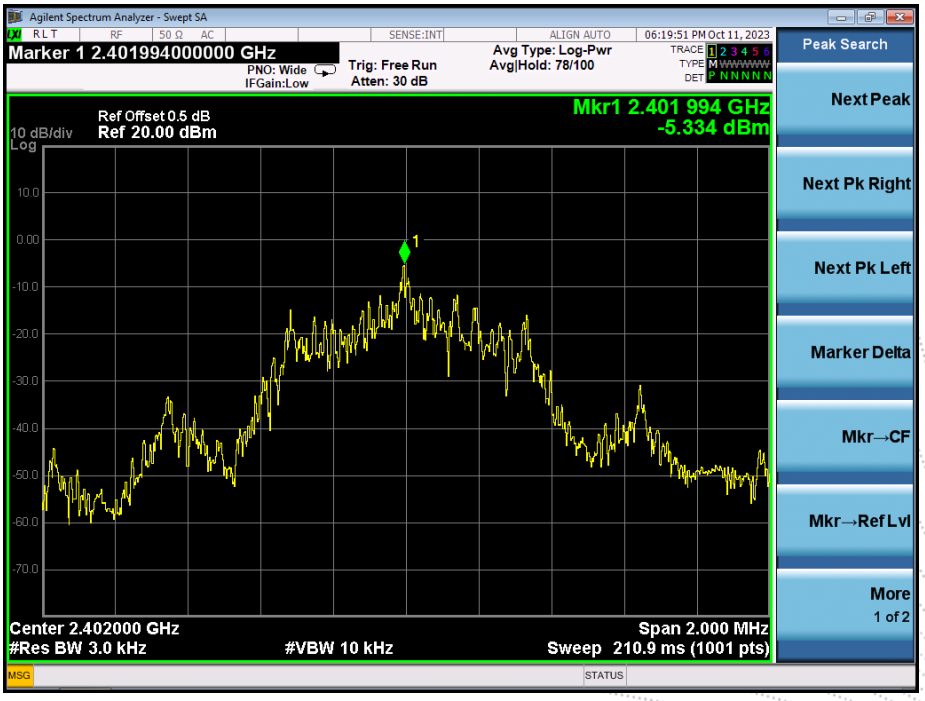

M

Agilent Spectrum Analyzer - Swept SA
Marker 1 2.449992000000 GHz
PNO: Wide
IFGain:Low
Trig: Free Run
Atten: 30 dB
Avg Type: Log-Pwr
Avg|Hold:>100/100
07:02:09 PM Oct 11, 2023
Ref Offset 0.5 dB
10 dB/div
Ref 20.00 dBm
Mkr1 2.449 992 GHz
-4.206 dBm
Center 2.450000 GHz
#Res BW 3.0 kHz
#VBW 10 kHz
Span 2.000 MHz
Sweep 210.9 ms (1001 pts)
Peak Search
Next Peak
Next Pk Right
Next Pk Left
Marker Delta
Mkr→CF
Mkr→Ref Lvl
More
1 of 2

H

Agilent Spectrum Analyzer - Swept SA
Marker 1 2.477994000000 GHz
PNO: Wide
IFGain:Low
Trig: Free Run
Atten: 30 dB
Avg Type: Log-Pwr
Avg|Hold: 90/100
07:17:50 PM Oct 11, 2023
Ref Offset 0.5 dB
10 dB/div
Ref 20.00 dBm
Mkr1 2.477 994 GHz
-4.314 dBm
Center 2.478000 GHz
#Res BW 3.0 kHz
#VBW 10 kHz
Span 2.000 MHz
Sweep 210.9 ms (1001 pts)
Peak Search
Next Peak
Next Pk Right
Next Pk Left
Marker Delta
Mkr→CF
Mkr→Ref Lvl
More
1 of 2

10. Bandwidth Test

10.1 Block Diagram Of Test Setup

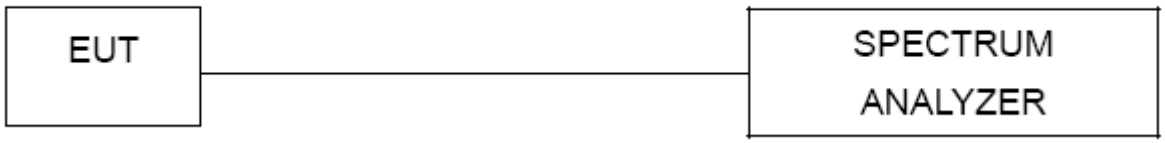

10.2 Limit

FCC Part15 (15.247) , Subpart C				
Section	Test Item	Limit	Frequency Range (MHz)	Result
15.247(a)(2)	Bandwidth	>= 500KHz (6dB bandwidth)	2400-2483.5	PASS

10.3 Test Procedure

1. Set RBW = 100 kHz.
2. Set the video bandwidth (VBW) ≥ 3 x RBW.
3. Detector = Peak.
4. Trace mode = max hold.
5. Sweep = auto couple.
6. Allow the trace to stabilize.
7. Measure the maximum width of the emission that is constrained by the frequencies associated with the two outermost amplitude points (upper and lower frequencies) that are attenuated by 6 dB relative to the maximum level measured in the fundamental emission. .

10.4 EUT Operating Conditions

The EUT tested system was configured as the statements of 4.6 Unless otherwise a special operating condition is specified in the follows during the testing.
Note: Power Spectral Density(dBm)=Reading+Cable Loss

10.5 Test Result

Temperature：	26℃	Relative Humidity：	54%
Test Mode ：	GFSK	Test Voltage ：	DC 23.1V

Frequency (MHz)	6dB bandwidth (MHz)	Limit (kHz)	Result
2402	0.505	500	Pass
2450	0.5019	500	Pass
2478	0.5021	500	Pass

L

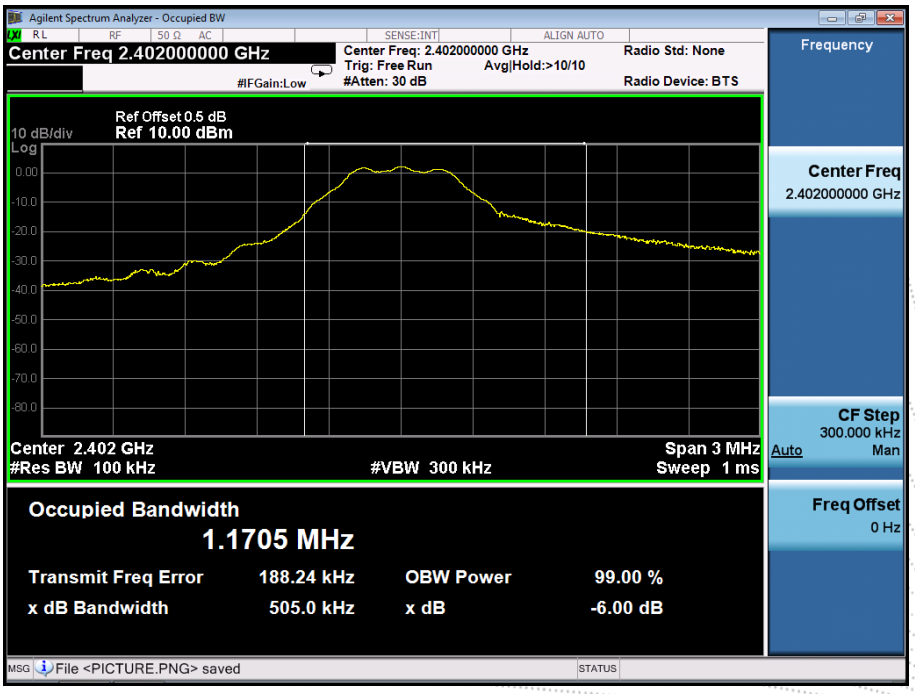

M

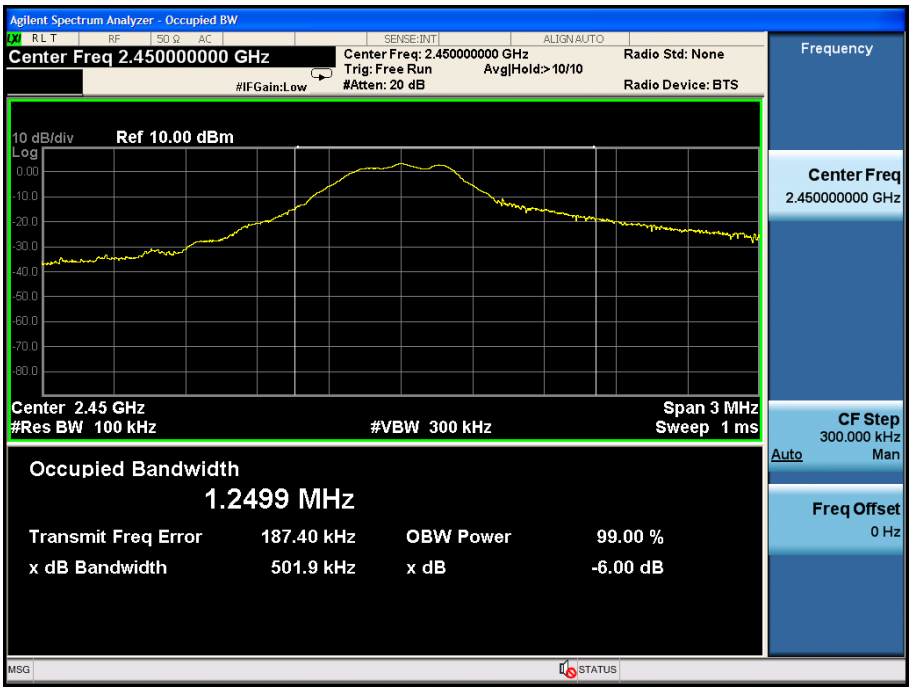
Agilent Spectrum Analyzer - Occupied BW
Center Freq 2.450000000 GHz
Center Freq: 2.450000000 GHz
Trig: Free Run
Avg|Hold:>10/10
#Atten: 20 dB
Radio Std: None
Radio Device: BTS
#IFGain:Low
10 dB/div
Ref 10.00 dBm
Center 2.45 GHz
#Res BW 100 kHz
#VBW 300 kHz
Span 3 MHz
Sweep 1 ms
Occupied Bandwidth
1.2499 MHz
Transmit Freq Error 187.40 kHz
OBW Power 99.00 %
x dB Bandwidth 501.9 kHz
x dB -6.00 dB
Frequency
Center Freq
2.450000000 GHz
CF Step
300.000 kHz
Auto Man
Freq Offset
0 Hz
MSG
STATUS

H

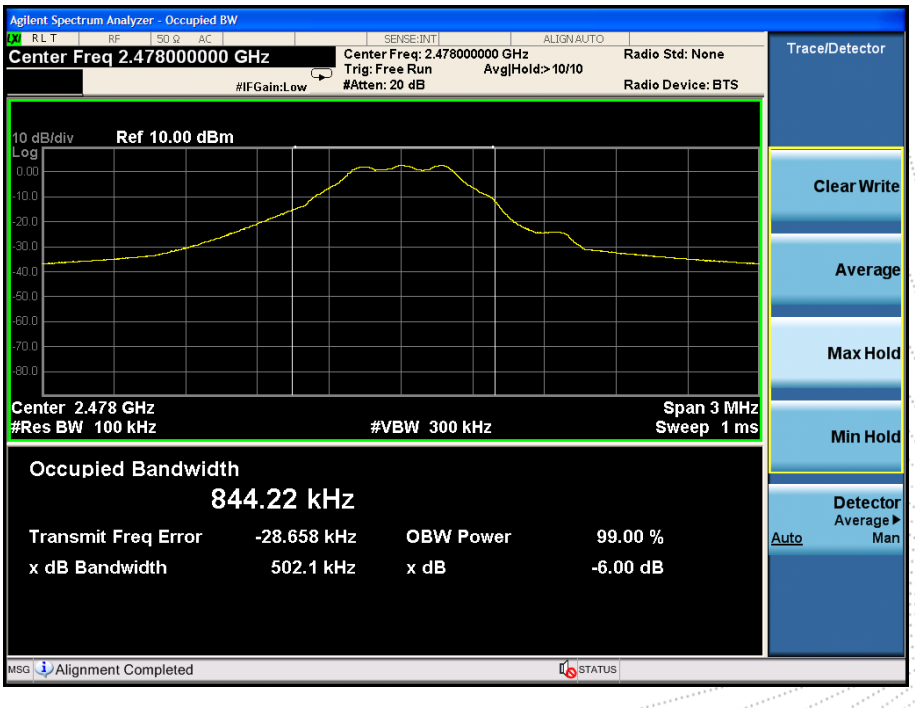
Agilent Spectrum Analyzer - Occupied BW
Center Freq 2.478000000 GHz
Center Freq: 2.478000000 GHz
Trig: Free Run
Avg|Hold:>10/10
#Atten: 20 dB
Radio Std: None
Radio Device: BTS
#IFGain:Low
10 dB/div
Ref 10.00 dBm
Center 2.478 GHz
#Res BW 100 kHz
#VBW 300 kHz
Span 3 MHz
Sweep 1 ms
Occupied Bandwidth
844.22 kHz
Transmit Freq Error -28.658 kHz
OBW Power 99.00 %
x dB Bandwidth 502.1 kHz
x dB -6.00 dB
Trace/Detector
Clear Write
Average
Max Hold
Min Hold
Detector
Average
Auto Man
MSG
Alignment Completed
STATUS

11. Peak Output Power Test

11.1 Block Diagram Of Test Setup

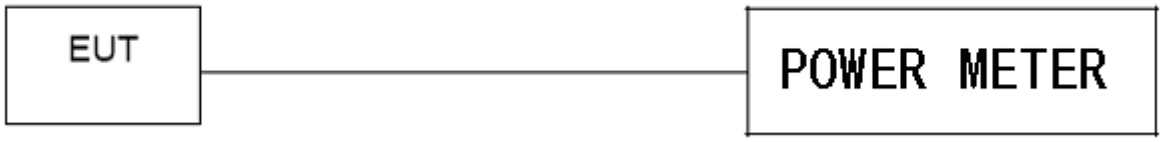

11.2 Limit

FCC Part15 (15.247) , Subpart C				
Section	Test Item	Limit	Frequency Range (MHz)	Result
15.247(b)(3)	Peak Output Power	1 watt or 30dBm	2400-2483.5	PASS

11.3 Test Procedure

a. The EUT was directly connected to the Power meter

11.4 EUT Operating Conditions

The EUT tested system was configured as the statements of 4.6 Unless otherwise a special operating condition is specified in the follows during the testing.
Note: Power Spectral Density(dBm)=Reading+Cable Loss

11.5 Test Result

Temperature：	26℃	Relative Humidity：	54%
Test Mode ：	GFSK	Test Voltage ：	DC 23.1V

Frequency	Maximum Conducted Output Power(PK)	Conducted Output Power Limit
(MHz)	(dBm)	dBm
2402	3.360	30
2450	4.529	30
2478	4.365	30

12. 100 KHz Bandwidth Of Frequency Band Edge

12.1 Block Diagram Of Test Setup

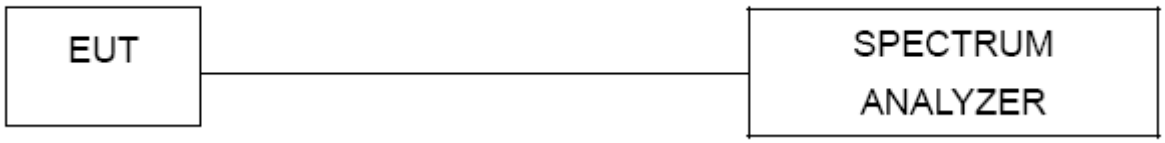

12.2 Limit

In any 100 kHz bandwidth outside the frequency band in which the spread spectrum intentional radiator is operating, the radio frequency power that is produced by the intentional radiator shall be at least 20 dB below that in the 100 kHz bandwidth within the band that contains the highest level of the desired power, based on either an RF conducted or a radiated measurement.

12.3 Test Procedure

Using the following spectrum analyzer setting:
a) Set the RBW = 100KHz.
b) Set the VBW = 300KHz.
c) Sweep time = auto couple.
d) Detector function = peak.
e) Trace mode = max hold.
f) Allow trace to fully stabilize..

12.4 EUT Operating Conditions

The EUT tested system was configured as the statements of 4.6 Unless otherwise a special operating condition is specified in the follows during the testing.
Note: Power Spectral Density(dBm)=Reading+Cable Loss

12.5 Test Result

Temperature：	26℃	Relative Humidity：	54%
Test Mode ：	GFSK	Test Voltage ：	DC 23.1V

GFSK: Band Edge, Left Side

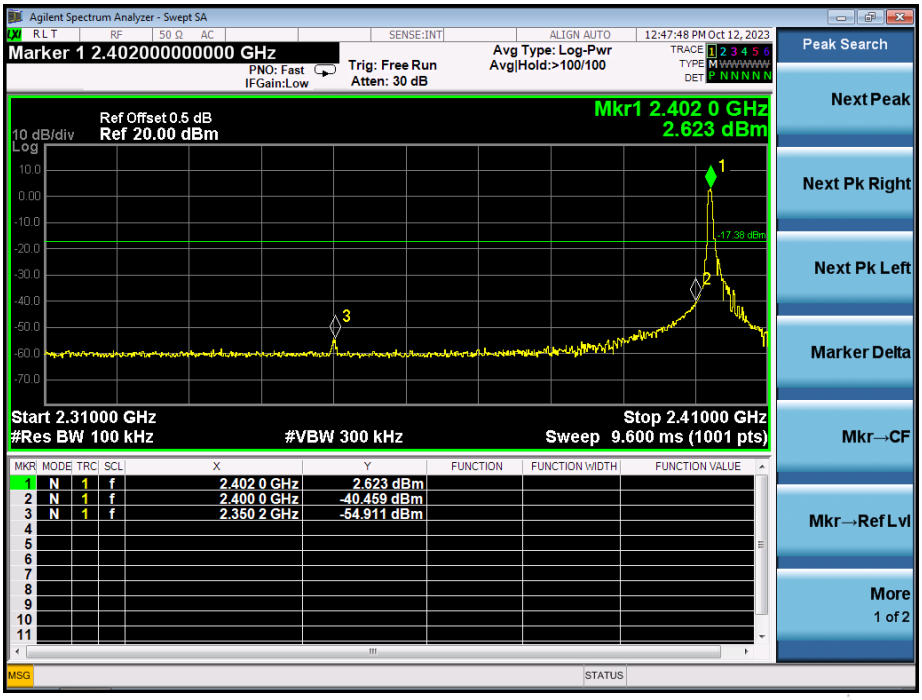

GFSK: Band Edge, Right Side

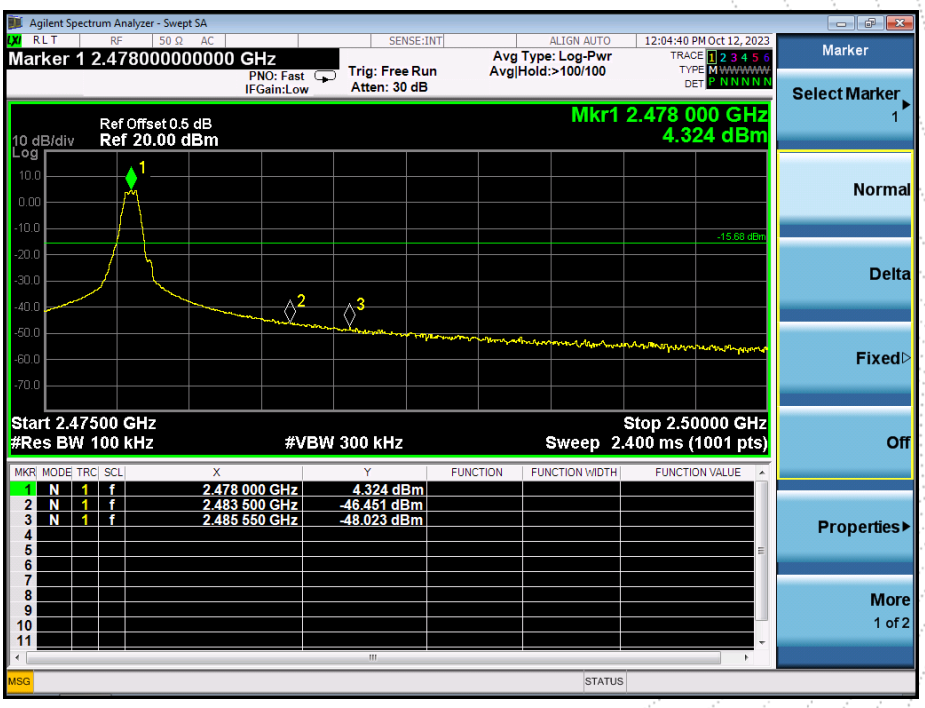

CONDUCTED EMISSION MEASUREMENT
GFSK

Low Channel 2402MHz

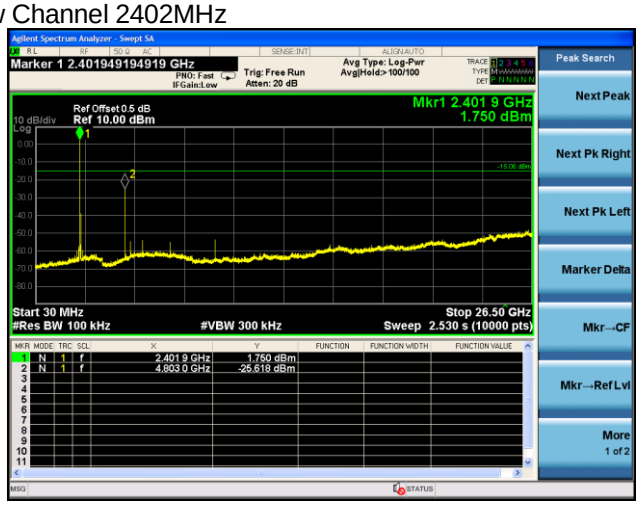

Middle Channel 2450MHz

High Channel 2478MHz

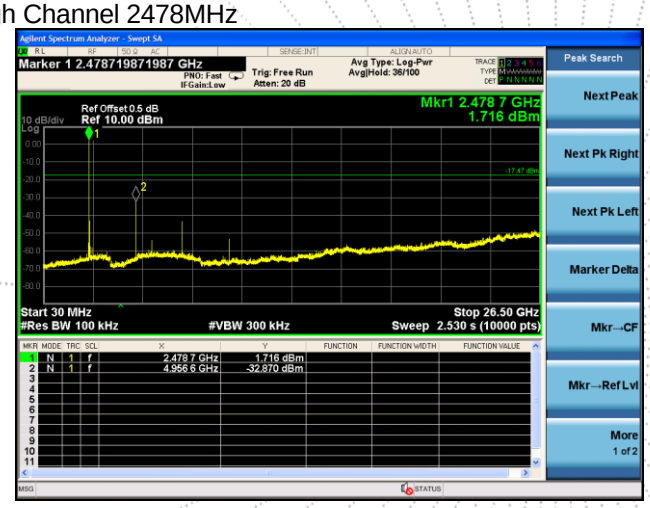

13. Antenna Requirement

13.1 Limit

15.203 requirement: For intentional device, according to 15.203: an intentional radiator shall be designed to ensure that no antenna other than that furnished by the responsible party shall be used with the device.

13.2 Test Result

The EUT antenna is External antenna, fulfill the requirement of this section.

14. EUT Photographs

EUT Photo 1

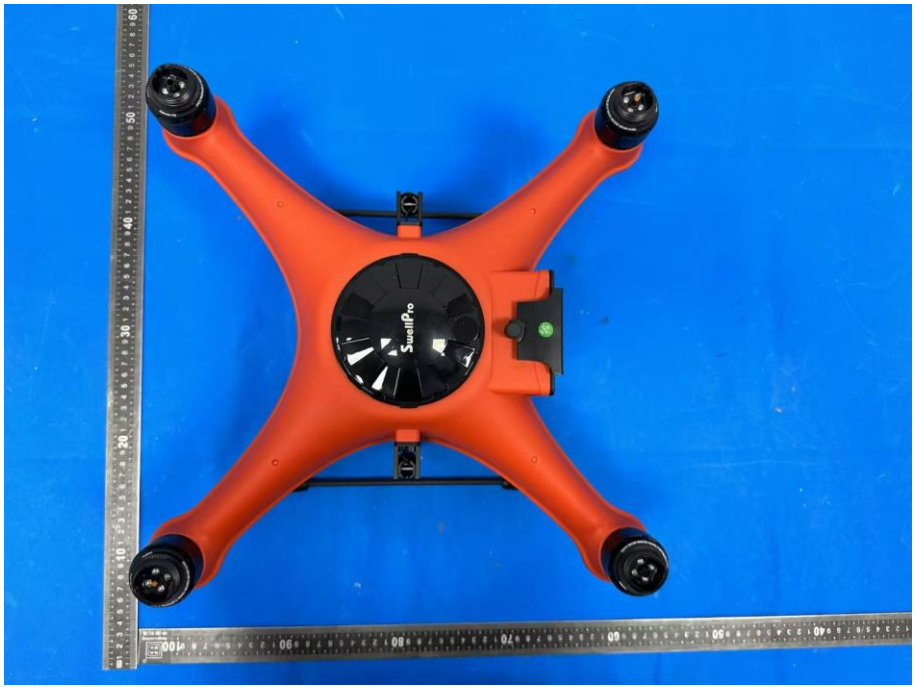

EUT Photo 2

15. EUT Test Setup Photographs

Radiated Measurement Photos

STATEMENT

1. The equipment lists are traceable to the national reference standards.

2. The test report can not be partially copied unless prior written approval is issued from our lab.

3. The test report is invalid without the "special seal for inspection and testing".

4. The test report is invalid without the signature of the approver.

5. The test process and test result is only related to the Unit Under Test.

6. Sample information is provided by the client and the laboratory is not responsible for its authenticity.

7. The quality system of our laboratory is in accordance with ISO/IEC17025.

8. If there is any objection to this test report, the client should inform issuing laboratory within 15 days from the date of receiving test report.

Address:
1-2/F., Building B, Pengzhou Industrial Park, No.158, Fuyuan 1st Road, Zhancheng, Fuhai Subdistrict, Bao'an District, Shenzhen, Guangdong, China

TEL：400-788-9558

P.C.: 518103

FAX：0755-33229357

Website：http://www.chnbctc.com

E-Mail：bctc@bctc-lab.com.cn

※※※※※ END ※※※※※