TCT 通测检测
TESTING CENTRE TECHNOLOGY

TEST REPORT

FCC ID. ..... :	2AQRM-S67
Test Report No..... :	TCT240910E040
Date of issue..... :	Oct. 09, 2024
Testing laboratory ..... :	SHENZHEN TONGCE TESTING LAB
Testing location/ address:	2101 & 2201, Zhenchang Factory Renshan Industrial Zone, Fuhai Subdistrict, Bao'an District, Shenzhen, Guangdong, 518103, People's Republic of China
Applicant's name..... :	FOXX Development Inc.
Address..... :	3480 Preston Ridge Road, Suite500, Alpharetta, GA 30005, USA
Manufacturer's name ... :	FOXX Development Inc.
Address..... :	3480 Preston Ridge Road, Suite500, Alpharetta, GA 30005, USA
Standard(s) ..... :	FCC CFR Title 47 Part 2 FCC CFR Title 47 Part22 FCC CFR Title 47 Part24 FCC CFR Title 47 Part27 FCC CFR Title 47 Part90
Product Name..... :	Smart Phone
Trade Mark ..... :	MIRO, FOXXD, AIRVOICE, FOXXD HTH
Model/Type reference..... :	S67
Rating(s)..... :	Power supply: DC 5V from adaptor or DC 3.87V from battery Adapter Information: Model: HJ-0502000W2-US Input: 100-240V 50/60Hz 0.3A Output: 5.0V 2.0A 10W
Date of receipt of test item ..... :	Aug. 26, 2024
Date (s) of performance of test..... :	Aug. 27, 2024 ~ Sep. 30, 2024
Tested by (+signature) ... :	Rleo LIU
Check by (+signature).... :	Beryl ZHAO
Approved by (+signature):	Tomsin

General disclaimer:

This report shall not be reproduced except in full, without the written approval of SHENZHEN TONGCE TESTING LAB. This document may be altered or revised by SHENZHEN TONGCE TESTING LAB personnel only, and shall be noted in the revision section of the document. The test results in the report only apply to the tested sample.

TABLE OF CONTENTS

1. General Product Information 3
   1.1. EUT description 3
   1.2. Model(s) list 5
2. Test Result Summary 6
3. General Information 7
   3.1. Test environment and mode 7
   3.2. Description of Support Units 9
   3.3. Configuration of Tested System 9
   3.4. Measurement Results Explanation Example 9
4. Facilities and Accreditations 10
   4.1. Facilities 10
   4.2. Location 10
   4.3. Measurement Uncertainty 10
5. Test Results and Measurement Data 11
   5.1. Effective Radiated Power and Effective Isotropic Radiated Power Measurement 11
   5.2. Peak to Average Ratio 13
   5.3. 99% Occupied Bandwidth and 26dB Bandwidth Measurement 14
   5.4. Band Edge and Conducted Spurious Emission Measurement 15
   5.5. Field Strength of Spurious Radiation Measurement 17
   5.6. Frequency Stability Measurement 37

Appendix A: Test Result of Conducted Test 39
Appendix B: Photographs of Test Setup 39
Appendix C: Photographs of EUT 39

Hotline: 400-6611-140 Tel: 86-755-27673339 Fax: 86-755-27673332 http://www.tct-lab.com

1. General Product Information

1.1. EUT description

Product Name.....:	Smart Phone
Model/Type reference.....:	S67
Sample Number.....:	TCT240910E034-0102
Tx Frequency.....:	LTE Band 2: 1850 MHz ~ 1910 MHz LTE Band 4: 1710 MHz ~ 1755 MHz LTE Band 5: 824 MHz ~ 849 MHz LTE Band 7: 2500 MHz ~ 2570 MHz LTE Band 12: 699 MHz ~ 716 MHz LTE Band 13: 777 MHz ~ 787 MHz LTE Band 17: 704 MHz ~ 716 MHz LTE Band 25: 1850 MHz ~ 1915 MHz LTE Band 26-1: 814 MHz ~ 824 MHz LTE Band 26-2: 824 MHz ~ 849 MHz LTE Band 38: 2570 MHz ~ 2620MHz LTE Band 40-1: 2305MHz ~ 2315 MHz LTE Band 40-2: 2350 MHz ~ 2360 MHz LTE Band 41: 2496 MHz ~ 2690 MHz LTE Band 66: 1710 MHz ~ 1780 MHz LTE Band 71: 665.5 MHz ~ 695.5 MHz
Rx Frequency .....:	LTE Band 2: 1930 MHz ~ 1990 MHz LTE Band 4: 2110 MHz ~ 2155 MHz LTE Band 5: 869 MHz ~ 894 MHz LTE Band 7: 2620 MHz ~ 2690 MHz LTE Band 12: 729 MHz ~ 746 MHz LTE Band 13: 746 MHz ~ 756 MHz LTE Band 17: 734 MHz ~ 746 MHz LTE Band 25: 1930 MHz ~ 1995 MHz LTE Band 26-1: 859 MHz ~ 869 MHz LTE Band 26-2: 869 MHz ~ 894 MHz LTE Band 38: 2570 MHz ~ 2620 MHz LTE Band 40-1: 2305 MHz ~ 2315 MHz LTE Band 40-2: 2350 MHz ~ 2360 MHz LTE Band 41: 2496 MHz ~ 2690 MHz LTE Band 66: 2110 MHz ~ 2180 MHz LTE Band 71: 704 MHz ~ 716 MHz
Bandwidth.....:	LTE Band 2: 1.4MHz /3MHz /5MHz /10MHz /15MHz /20MHz LTE Band 4: 1.4MHz /3MHz /5MHz /10MHz /15MHz /20MHz LTE Band 5: 1.4MHz /3MHz /5MHz /10MHz LTE Band 7: 5MHz /10MHz /15MHz /20MHz LTE Band 12: 1.4MHz /3MHz /5MHz /10MHz LTE Band 13: 5MHz /10MHz LTE Band 17: 5MHz /10MHz LTE Band 25: 1.4MHz /3MHz /5MHz /10MHz /15MHz /20MHz LTE Band 26-1: 1.4MHz /3MHz /5MHz /10MHz

	LTE Band 26-2: 1.4MHz /3MHz /5MHz /10MHz /15MHz LTE Band 38: 5MHz /10MHz /15MHz /20MHz LTE Band 40-1: 5MHz /10MHz LTE Band 40-2: 5MHz /10MHz LTE Band 41: 5MHz /10MHz /15MHz /20MHz LTE Band 66: 1.4MHz /3MHz /5MHz /10MHz /15MHz /20MHz LTE Band 71: 5MHz /10MHz /15MHz /20MHz
Maximum Output Power to Antenna.....:	FDD LTE Band 2: 22.42dBm FDD LTE Band 4: 21.32dBm FDD LTE Band 5: 18.64dBm FDD LTE Band 7: 23.46 dBm FDD LTE Band 12: 17.88dBm FDD LTE Band 13: 18.21dBm FDD LTE Band 17: 17.95dBm FDD LTE Band 25: 23.12dBm FDD LTE Band 26-1: 18.67dBm FDD LTE Band 26-2: 18.53dBm FDD LTE Band 38: 19.77dBm FDD LTE Band 40-1: 21.62dBm FDD LTE Band 40-2: 21.33dBm FDD LTE Band 41: 22.39dBm FDD LTE Band 66: 21.68dBm FDD LTE Band 71: 17.98dBm
Type of Modulation.....:	QPSK/16QAM
Antenna Type.....:	Internal Antenna
Antenna Gain.....:	LTE Band 2: 0.91dBi LTE Band 4: 0.64dBi LTE Band 5: -1.15dBi LTE Band 7: 1.78dBi LTE Band 12: -1.85dBi LTE Band 13: -1.54dBi LTE Band 17: -1.83dBi LTE Band 25: 0.82dBi LTE Band 26-1: -1.16dBi LTE Band 26-2: -1.16dBi LTE Band 38: 1.75dBi LTE Band 40-1: 1.75dBi LTE Band 40-2: 1.75dBi LTE Band 41: 1.75dBi LTE Band 66: 0.66dBi LTE Band 71: -2.13dBi
Rating(s).....:	Power supply: DC 5V from adaptor or DC 3.87V from battery Adapter Information: Model: HJ-0502000W2-US Input: 100-240V 50/60Hz 0.3A Output: 5.0V 2.0A 10W

Note: The antenna gain listed in this report is provided by applicant, and the test laboratory is not responsible for this parameter.

1.2. Model(s) list

None.

2. Test Result Summary

Requirement	CFR 47 Section	Result
Conducted Output Power	§2.1046; §22.913; §24.232(c); §27.50(d); §27.50(c); §27.50(b); §90.542(a)	PASS
Peak-to-Average Ratio	§2.1046; §24.232(d) §27.50(d); §27.50(c); §27.50(b)	PASS
Effective Radiated Power	§2.1046; §22.913; §24.232(c); §27.50(d); §27.50(c); §27.50(b); §90.542(a)	PASS
Equivalent Isotropic Radiated Power	§2.1046; §22.913; §24.232(c); §27.50(d); §27.50(c); §27.50(b); §90.542(a)	PASS
Occupied Bandwidth	§2.1049; §24.238(b); §27.53; §90.209(a)	PASS
Band Edge	§2.1051; §22.917(a); §27.53(h); §27.53(c); §27.53(g); §24.238(a); §90.543(e)	PASS
Conducted Spurious Emission	§2.1051; §22.917(a); §27.53(h); §27.53(g); §27.53(c); §24.238(a); §90.543(c)	PASS
Field Strength of Spurious Radiation	§2.1053; §22.917(a); §27.53(g); §27.53(c); §27.53(h); §24.238(a); §90.543(c)	PASS
Frequency Stability for Temperature & Voltage	§2.1055; §22.355; §27.54; §24.235; §90.213	PASS

Note:

1. PASS: Test item meets the requirement.

2. Fail: Test item does not meet the requirement.

3. N/A: Test case does not apply to the test object.

4. The test result judgment is decided by the limit of test standard.

3. General Information

3.1. Test environment and mode

Operating Environment:	
Temperature:	25.0 °C
Humidity:	56 % RH
Atmospheric Pressure:	1010 mbar

Keep the EUT in communication with CMW500 and select channel with modulation
All modes and data rates and positions were investigated.
Test modes are chosen to be reported as the worst case configuration below:

Test Mode		
Band	**Radiated TCs**	**Conducted TCs**
LTE Band 2	QPSK Link (1.4MHz / 3MHz / 5MHz / 10MHz / 15MHz / 20MHz)	16QAM Link (1.4MHz / 3MHz / 5MHz / 10MHz / 15MHz / 20MHz)
LTE Band 4	QPSK Link (1.4MHz / 3MHz / 5MHz / 10MHz / 15MHz / 20MHz)	16QAM Link (1.4MHz / 3MHz / 5MHz / 10MHz / 15MHz / 20MHz)
LTE Band 5	QPSK Link (1.4MHz / 3MHz / 5MHz / 10MHz)	16QAM Link (1.4MHz / 3MHz / 5MHz / 10MHz)
LTE Band 7	QPSK Link (5MHz / 10MHz / 15MHz / 20MHz)	16QAM Link (5MHz / 10MHz / 15MHz / 20MHz)
LTE Band 12	QPSK Link (1.4MHz / 3MHz / 5MHz / 10MHz)	16QAM Link (1.4MHz / 3MHz / 5MHz / 10MHz)
LTE Band 13	QPSK Link (5MHz / 10MHz)	16QAM Link (5MHz / 10MHz)
LTE Band 17	QPSK Link (5MHz / 10MHz)	16QAM Link (5MHz / 10MHz)
LTE Band 25	QPSK Link (1.4MHz / 3MHz / 5MHz / 10MHz /20MHz)	16QAM Link (1.4MHz / 3MHz / 5MHz / 10MHz /20MHz)
LTE Band 26-1	QPSK Link (1.4MHz / 3MHz / 5MHz / 10MHz)	16QAM Link (1.4MHz / 3MHz / 5MHz / 10MHz)
LTE Band 26-2	QPSK Link (1.4MHz / 3MHz / 5MHz /	16QAM Link (1.4MHz / 3MHz / 5MHz /

	10MHz / 15MHz)	10MHz / 15MHz)
LTE Band 38	QPSK Link (5MHz / 10MHz / 15MHz / 20MHz)	16QAM Link (5MHz / 10MHz / 15MHz / 20MHz)
LTE Band 40-1	QPSK Link (5MHz / 10MHz)	16QAM Link (5MHz / 10MHz)
LTE Band 40-2	QPSK Link (5MHz /10MHz)	16QAM Link (5MHz /10MHz)
LTE Band 41	QPSK Link (5MHz / 10MHz / 15MHz / 20MHz)	16QAM Link (5MHz / 10MHz / 15MHz / 20MHz)
LTE Band 66	QPSK Link (1.4MHz / 3MHz / 5MHz / 10MHz / 15MHz / 20MHz)	16QAM Link (1.4MHz / 3MHz / 5MHz / 10MHz / 15MHz / 20MHz)
LTE Band 71	QPSK Link (5MHz /10MHz / 15MHz / 20MHz)	16QAM Link (5MHz /10MHz / 15MHz / 20MHz)

Antenna port conducted and radiated test items were performed according to KDB 971168 D01 Power Meas License Digital Systems v03 with maximum output power. Radiated measurements were performed with rotating EUT in different three orthogonal test planes to find the maximum emission. The sample was placed 0.8m/1.5m above the ground plane of 3m chamber. Measurements in both horizontal and vertical polarities were performed. During the test, each emission was maximized by: having the EUT continuously working, investigated all operating modes, rotated about all 3 axis (X, Y & Z) and considered typical configuration to obtain worst position, manipulating interconnecting cables, rotating the turntable, varying antenna height from 1m to 4m in both horizontal and vertical polarization. The emissions worst-case are shown in Test Results of the following pages.

3.2. Description of Support Units

The EUT has been tested as an independent unit together with other necessary accessories or support units. The following support units or accessories were used to form a representative test configuration during the tests.

Equipment	Model No.	Serial No.	FCC ID	Trade Name
/	/	/	/	/

Note:

1. All the equipment/cables were placed in the worst-case configuration to maximize the emission during the test.

2. Grounding was established in accordance with the manufacturer's requirements and conditions for the intended use.

3.3. Configuration of Tested System

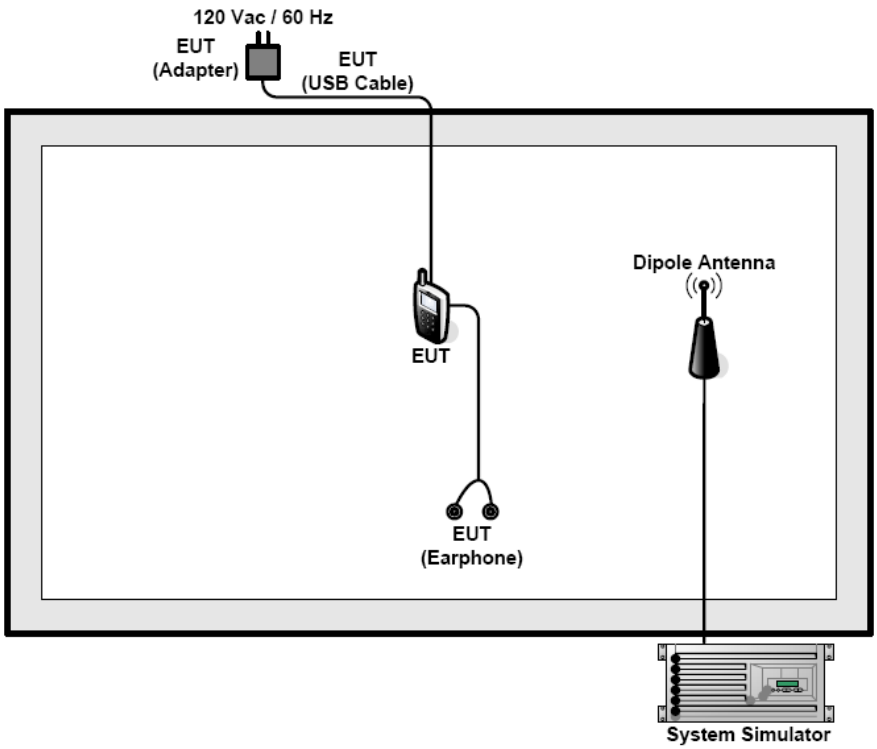

3.4. Measurement Results Explanation Example

For all conducted test items:

The offset level is set in the spectrum analyzer to compensate the RF cable loss and attenuator factor between RF conducted output port and spectrum analyzer. With the offset compensation, the spectrum analyzer reading level will be exactly the RF output level. The spectrum analyzer offset is derived from RF cable loss and attenuator factor.

Offset = RF cable loss + attenuator factor.

4. Facilities and Accreditations

4.1. Facilities

The test facility is recognized, certified, or accredited by the following organizations:

- FCC - Registration No.: 645098
  SHENZHEN TONGCE TESTING LAB
  Designation Number: CN1205
  The testing lab has been registered and fully described in a report with the (FCC) Federal Communications Commission. The acceptance letter from the FCC is maintained in our files.
- IC - Registration No.: 10668A
  SHENZHEN TONGCE TESTING LAB
  CAB identifier: CN0031
  The testing lab has been registered by Innovation, Science and Economic Development Canada for radio equipment testing.

4.2. Location

SHENZHEN TONGCE TESTING LAB
Address: 2101 & 2201, Zhenchang Factory Renshan Industrial Zone, Fuhai Subdistrict, Bao'an District, Shenzhen, Guangdong, 518103, People's Republic of China
TEL: +86-755-27673339

4.3. Measurement Uncertainty

The reported uncertainty of measurement y ± U, where expended uncertainty U is based on a standard uncertainty multiplied by a coverage factor of k=2, providing a level of confidence of approximately 95 %.

No.	Item	MU
1	Conducted Emission	± 3.10 dB
2	RF power, conducted	± 0.12 dB
3	Spurious emissions, conducted	± 0.11 dB
4	All emissions, radiated(<1 GHz)	± 4.56 dB
5	All emissions, radiated(1 GHz - 18 GHz)	± 4.22 dB
6	All emissions, radiated(18 GHz- 40 GHz)	± 4.36 dB

Hotline: 400-6611-140 Tel: 86-755-27673339 Fax: 86-755-27673332 http://www.tct-lab.com

5. Test Results and Measurement Data

5.1. Effective Radiated Power and Effective Isotropic Radiated Power Measurement

5.1.1. Test Specification

Test Requirement:	Refer to section 2
Test Method:	FCC part 2.1046
Limit:	LTE Band 2: 2W LTE Band 4: 1W LTE Band 5: 7W LTE Band 7: 2W LTE Band 12: 3W LTE Band 13: 3W LTE Band 17: 3W LTE Band 25: 2W LTE Band 26-1: 100W LTE Band 26-2: 7W LTE Band 38: 2W LTE Band 40-1: 0.25W LTE Band 40-2: 0.25W LTE Band 41: 2W LTE Band 66: 1W LTE Band 71: 3W
Test Setup:	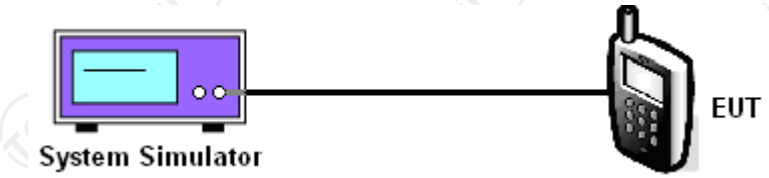
Test Procedure:	1. The transmitter output port was connected to the system simulator. 2. Set EUT at maximum power through system simulator. 3. Select lowest, middle, highest channels for each band and different modulation. 4. Measure and record the power level from the system simulator. 5. Calculate the ERP and EIRP The relevant equation for determining the ERP or EIRP from the conducted RF output power measured using the guidance provided above is: ERP or EIRP = $P_{Meas} + G_T - L_C$

	where: ERP or EIRP = effective radiated power or equivalent isotropically radiated power, respectively (expressed in the same units as P Meas , typically dBW or dBm); P_{Meas} = measured transmitter output power or PSD, in dBm or dBW; G_T = gain of the transmitting antenna, in dBd (ERP) or dBi (EIRP); L_C = signal attenuation in the connecting cable between the transmitter and antenna, in dB. *Note: For personal/portable radios utilizing an integral antenna, the factor L C is typically negligible. However, in a fixed station transmit system that utilizes a long cable run between the transmitter and the transmitting antenna, this factor can be significant.*
Test Result:	PASS

5.1.2. Test Instruments

Equipment	Manufacturer	Model	Serial Number	Calibration Due
Wideband Radio Communication Tester	R&S	CMW500	165017	Jan. 31, 2025

5.2. Peak to Average Ratio

5.2.1. Test Specification

Test Requirement:	Refer to section 2
Test Method:	FCC KDB 971168 D01v03
Limit:	The peak-to-average ratio (PAR) of the transmission may not exceed 13 dB.
Test Setup:	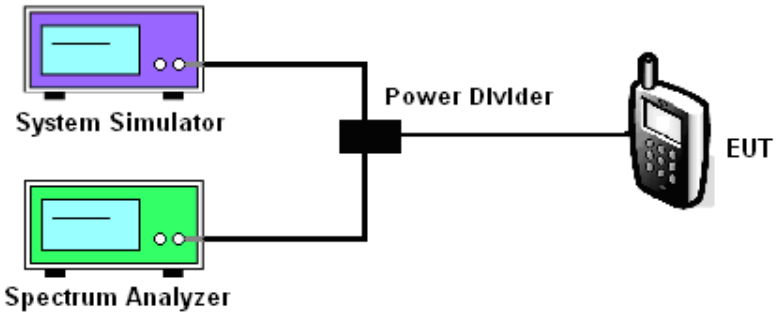
Test Procedure:	1. The testing follows FCC KDB 971168 D01v03 Section 5.7.1. 2. The EUT was connected to spectrum analyzer and system simulator via a power divider. 3. Set EUT to transmit at maximum output power. 4. Set the CCDF (Complementary Cumulative Distribution Function) option of the spectrum analyzer. Record the maximum PAPR level associated with a probability of 0.1%.
Test Result:	PASS

5.2.2. Test Instruments

Equipment	Manufacturer	Model	Serial Number	Calibration Due
Wideband Radio Communication Tester	R&S	CMW500	165017	Jan. 31, 2025
Spectrum Analyzer	Agilent	N9020A	MY50101018	Jun. 26, 2025

5.3. 99% Occupied Bandwidth and 26dB Bandwidth Measurement

5.3.1. Test Specification

Test Requirement:	Refer to section 2
Test Method:	FCC part 2.1049
Limit:	N/A
Test Setup:	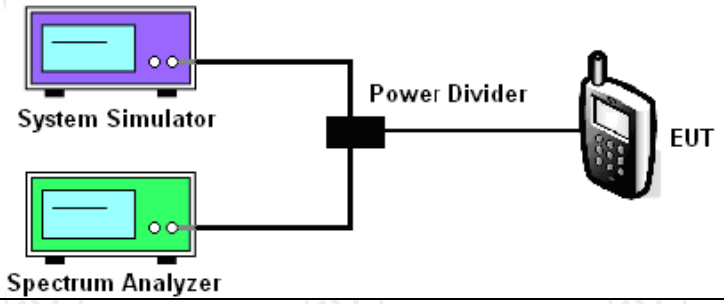
Test Procedure:	1. The testing follows FCC KDB 971168 D01v03 Section 4.2. 2. The EUT was connected to the spectrum analyzer and system simulator via a power divider. 3. The RF output of the EUT was connected to the spectrum analyzer by RF cable and attenuator. The path loss was compensated to the results for each measurement. 4. The 99% occupied bandwidth were measured, set RBW= 1% of OBW, VBW= 3*RBW, sample detector, trace maximum hold. 5. The 26dB bandwidth were measured, set RBW= 1% of EBW, VBW= 3*RBW, peak detector, trace maximum hold.
Test Result:	PASS

5.3.2. Test Instruments

Equipment	Manufacturer	Model	Serial Number	Calibration Due
Wideband Radio Communication Tester	R&S	CMW500	165017	Jan. 31, 2025
Spectrum Analyzer	Agilent	N9020A	MY50101018	Jun. 26, 2025

5.4. Band Edge and Conducted Spurious Emission Measurement

5.4.1. Test Specification

Test Requirement:	Refer to section 2
Test Method:	FCC part2.1051
Limit:	-13dbm Band 13: -13dBm/-35dbm/-40dbm Band 41: -10dBm/-13dbm/-25dbm
Test Setup:	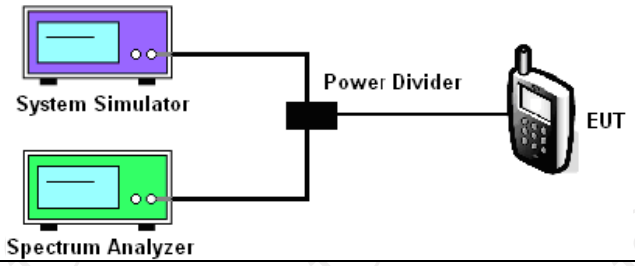
Test Procedure:	1. The testing follows FCC KDB 971168 D01v03 Section 6.0. 2. The EUT was connected to the spectrum analyzer and system simulator via a power divider. 3. The RF output of EUT was connected to the spectrum analyzer by an RF cable and attenuator. The path loss was compensated to the results for each measurement. 4. The band edges of low and high channels for the highest RF powers were measured. 5. The conducted spurious emission for the whole frequency range was taken. 6. The RF fundamental frequency should be excluded against the limit line in the operating frequency band. 7. The limit line is derived from 43 + 10log(P) dB below the transmitter power P(Watts) = P(W) - [43 + 10log(P)] (dB) = [30 + 10log(P)] (dBm) - [43 + 10log(P)] (dB) = -13dBm. For Band 17, he limit line is derived from 55 + 10log(P) dB below the transmitter power
Test Result:	PASS

5.4.2. Test Instruments

Equipment	Manufacturer	Model	Serial Number	Calibration Due
Wideband Radio Communication Tester	R&S	CMW500	165017	Jan. 31, 2025
Spectrum Analyzer	Agilent	N9020A	MY50101018	Jun. 26, 2025

5.5. Field Strength of Spurious Radiation Measurement

5.5.1. Test Specification

Test Requirement:	Refer to section 2
Test Method:	FCC part 2.1053
Limit:	For Band 2, 4, 5, 12, 17, 25, 26, 66, 71: -13dBm For Band 7,38, 41: -25dBm For Band 13: -40dBm/-13dBm For Band 40-1, 40-2: -40dBm
Test setup:	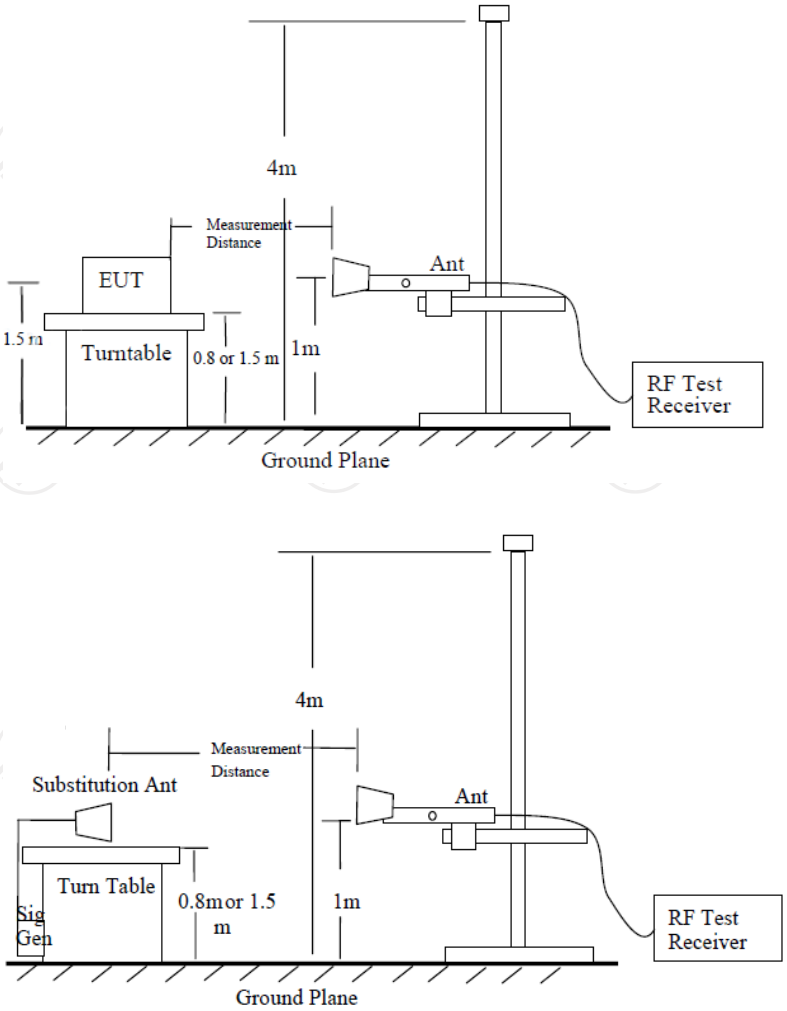
Test Procedure:	1. The testing follows FCC KDB 971168 D01v03 Section 5.8 and ANSI / TIA-603-D-2010Section 2.2.12. 2. The EUT was placed on a rotatable wooden table 0.8 meters above the ground. 3. The EUT was set 3 meters from the receiving antenna, which was mounted on the antenna tower. 4. The table was rotated 360 degrees to determine the position of the highest spurious emission.

	5. The height of the receiving antenna is varied between one meter and four meters to search for the maximum spurious emission for both horizontal and vertical polarizations. 6. Make the measurement with the spectrum analyzer's RBW = 1MHz, VBW = 3MHz, taking record of maximum spurious emission. 7. A horn antenna was substituted in place of the EUT and was driven by a signal generator. 8. Tune the output power of signal generator to the same emission level with EUT maximum spurious emission. 9. Taking the record of output power at antenna port. 10. Repeat step 7 to step 8 for another polarization. 11. EIRP (dBm) = S.G. Power – Tx Cable Loss + Tx Antenna Gain 12. ERP (dBm) = EIRP - 2.15 13. The RF fundamental frequency should be excluded against the limit line in the operating frequency band. 14. The limit line is derived from 43 + 10log(P) dB below the transmitter power P(Watts) = P(W) - [43 + 10log(P)] (dB) = [30 + 10log(P)] (dBm) - [43 + 10log(P)] (dB) = -13dBm.
Test results:	PASS
Remark:	All modulations have been tested, but only the worst modulation show in this test item.

5.5.2. Test Instruments

Radiated Emission Test Site (966)				
Name of Equipment	**Manufacturer**	**Model**	**Serial Number**	**Calibration Due**
Wideband Radio Communication Tester	R&S	CMW500	137557	Jan. 31, 2025
Spectrum Analyzer	R&S	FSQ40	200061	Jun. 26, 2025
Signal Generator	Agilent	N5173B	MY58108823	Jan. 31, 2025
Broadband Antenna	Schwarzbeck	VULB9163	340	Jun. 28, 2025
Horn Antenna	Schwarzbeck	BBHA 9120D	631	Jun. 28, 2025
Broadband Antenna	Schwarzbeck	VULB9163	412	Jun. 28, 2025
Horn Antenna	Schwarzbeck	BBHA 9120D	1201	Jun. 28, 2025
Horn Antenna	Schwarzbeck	BBHA 9170	00956	Feb. 02, 2025
Coaxial cable	SKET	RE-03-D	/	Jun. 26, 2025
Coaxial cable	SKET	RE-03-M	/	Jun. 26, 2025
Coaxial cable	SKET	RE-03-L	/	Jun. 26, 2025
Coaxial cable	SKET	RE-04-D	/	Jun. 26, 2025
Coaxial cable	SKET	RE-04-M	/	Jun. 26, 2025
Coaxial cable	SKET	RE-04-L	/	Jun. 26, 2025
Antenna Mast	Keleto	RE-AM	/	/
EMI Test Software	EZ_EMC	FA-03A2 RE+	1.1.4.2	/

5.5.3. Test Data

Frequency Range (9 kHz-30MHz)

Frequency (MHz)	Level@3m (dBμV/m)	Limit@3m (dBμV/m)
--	--	--
--	--	--
--	--	--
--	--	--

Note: *1. Emission Level=Reading+ Cable loss+Antenna factor-Amp factor*

2. The emission levels are 20 dB below the limit value, which are not reported. It is deemed to comply with the requirement

Band	Band 2(QPSK, 20MHz)	Test channel:	Lowest
Test mode:		Temperature :	25°C
		Relative Humidity:	56%

Note: Spurious emissions within 30-1000MHz were found more than 20dB below limit line.

Frequency (MHz)	Spurious Emission				Limit (dBm)	Result
	Polarization	Level (dBm)	Correction Factor (dB)	Spurious emissions (dBm)		
3720	Vertical	-45.55	1.05	-44.50	-13	PASS
5580	V	-50.54	6.98	-43.56		
7440	V	-60.90	10.40	-50.50		
3720	Horizontal	-43.42	2.08	-41.34		
5580	H	-49.89	7.46	-42.43		
7440	H	-59.83	10.00	-49.83		

Band	Band 2(QPSK, 20MHz)	Test channel:	Middle
Test mode:		Temperature :	25°C
		Relative Humidity:	56%

Note: Spurious emissions within 30-1000MHz were found more than 20dB below limit line.

Frequency (MHz)	Spurious Emission				Limit (dBm)	Result
	Polarization	Level (dBm)	Correction Factor (dB)	Spurious emissions (dBm)		
3760	Vertical	-45.45	1.32	-44.13	-13	PASS
5640	V	-54.99	7.21	-47.78		
7520	V	-63.28	10.43	-52.85		
3760	Horizontal	-44.50	2.48	-42.02		
5640	H	-50.53	7.63	-42.90		
7520	H	-64.53	10.03	-54.50		

Band	Band 2(QPSK, 20MHz)	Test channel:	Highest
Test mode:		Temperature :	25°C
		Relative Humidity:	56%

Note: Spurious emissions within 30-1000MHz were found more than 20dB below limit line.

Frequency (MHz)	Spurious Emission				Limit (dBm)	Result
	Polarization	Level (dBm)	Correction Factor (dB)	Spurious emissions (dBm)		
3800	Vertical	-46.94	1.59	-45.35	-13	PASS
5700	V	-55.96	7.43	-48.53		
7600	V	-62.20	10.53	-51.67		
3800	Horizontal	-42.31	2.88	-39.43		
5700	H	-51.94	7.81	-44.13		
7600	H	-63.00	10.23	-52.77		

Band	Band 4(QPSK, 20MHz)	Test channel:	Lowest
Test mode:		Temperature :	25°C
		Relative Humidity:	56%

Note: Spurious emissions within 30-1000MHz were found more than 20dB below limit line.

Frequency (MHz)	Spurious Emission				Limit (dBm)	Result
	Polarization	Level (dBm)	Correction Factor (dB)	Spurious emissions (dBm)		
3440	Vertical	-45.68	-0.48	-46.16	-13	PASS
5160	V	-49.42	6.15	-43.27		
6880	V	-62.53	9.78	-52.75		
3440	Horizontal	-43.25	-0.11	-43.36		
5160	H	-49.61	6.59	-43.02		
6880	H	-62.07	9.70	-52.37		

Band	Band 4(QPSK, 20MHz)	Test channel:	Middle
Test mode:		Temperature :	25°C
		Relative Humidity:	56%

Note: Spurious emissions within 30-1000MHz were found more than 20dB below limit line.

Frequency (MHz)	Spurious Emission				Limit (dBm)	Result
	Polarization	Level (dBm)	Correction Factor (dB)	Spurious emissions (dBm)		
3465	Vertical	-44.97	-0.46	-45.43	-13	PASS
5197.5	V	-55.16	6.21	-48.95		
6930	V	-64.44	9.99	-54.45		
3465	Horizontal	-41.77	-0.11	-41.88		
5197.5	H	-50.58	6.66	-43.92		
6930	H	-62.84	9.88	-52.96		

Band	Band 4(QPSK, 20MHz)	Test channel:	Highest
Test mode:		Temperature :	25°C
		Relative Humidity:	56%

Note: Spurious emissions within 30-1000MHz were found more than 20dB below limit line.

Frequency (MHz)	Spurious Emission				Limit (dBm)	Result
	Polarization	Level (dBm)	Correction Factor (dB)	Spurious emissions (dBm)		
3490	Vertical	-46.17	-0.45	-46.62	-13	PASS
5235	V	-56.11	6.27	-49.84		
6980	V	-62.43	10.21	-52.22		
3490	Horizontal	-42.68	-0.11	-42.79		
5235	H	-52.55	6.73	-45.82		
6980	H	-61.27	10.07	-51.20		

Band	Band 5(QPSK, 10MHz)	Test channel:	Lowest
Test mode:		Temperature :	25°C
		Relative Humidity:	56%

Note: Spurious emissions within 30-1000MHz were found more than 20dB below limit line.

Frequency (MHz)	Spurious Emission				Limit (dBm)	Result
	Polarization	Level (dBm)	Correction Factor (dB)	Spurious emissions (dBm)		
1658	Vertical	-46.43	-6.46	-52.89	-13	PASS
2487	V	-50.50	-2.84	-53.34		
3316	V	-61.43	-0.48	-61.91		
1658	Horizontal	-45.18	-6.30	-51.48		
2487	H	-46.43	-2.95	-49.38		
3316	H	-62.16	-0.10	-62.26		

Band	Band 5(QPSK, 10MHz)	Test channel:	Middle
Test mode:		Temperature :	25°C
		Relative Humidity:	56%

Note: Spurious emissions within 30-1000MHz were found more than 20dB below limit line.

Frequency (MHz)	Spurious Emission				Limit (dBm)	Result
	Polarization	Level (dBm)	Correction Factor (dB)	Spurious emissions (dBm)		
1673	Vertical	-44.26	-6.46	-50.72	-13	PASS
2509.5	V	-56.60	-2.75	-59.35		
3346	V	-63.01	-0.47	-63.48		
1673	Horizontal	-43.37	-6.32	-49.69		
2509.5	H	-49.20	-2.86	-52.06		
3346	H	51.67	-0.10	51.57		

Band	Band 5(QPSK, 10MHz)	Test channel:	Highest
Test mode:		Temperature :	25°C
		Relative Humidity:	56%

Note: Spurious emissions within 30-1000MHz were found more than 20dB below limit line.

Frequency (MHz)	Spurious Emission				Limit (dBm)	Result
	Polarization	Level (dBm)	Correction Factor (dB)	Spurious emissions (dBm)		
1688	Vertical	-48.47	-6.45	-54.92	-13	PASS
2532	V	-57.29	-2.65	-59.94		
3376	V	-63.53	-0.47	-64.00		
1688	Horizontal	-43.23	-6.34	-49.57		
2532	H	-52.73	-2.74	-55.47		
3376	H	-63.59	-0.10	-63.69		

Band	Band 7(QPSK, 20MHz)	Test channel:	Lowest
Test mode:		Temperature :	25°C
		Relative Humidity:	56%

Note: Spurious emissions within 30-1000MHz were found more than 20dB below limit line.

Frequency (MHz)	Spurious Emission				Limit (dBm)	Result
	Polarization	Level (dBm)	Correction Factor (dB)	Spurious emissions (dBm)		
5020	Vertical	-47.24	5.93	-41.31	-25	PASS
7530	V	-50.10	10.45	-39.65		
10040	V	-61.53	14.82	-46.71		
5020	Horizontal	-45.34	6.33	-39.01		
7530	H	-47.83	10.06	-37.77		
10040	H	-62.30	14.48	-47.82		

Band	Band 7(QPSK, 20MHz)	Test channel:	Middle
Test mode:		Temperature :	25°C
		Relative Humidity:	56%

Note: Spurious emissions within 30-1000MHz were found more than 20dB below limit line.

Frequency (MHz)	Spurious Emission				Limit (dBm)	Result
	Polarization	Level (dBm)	Correction Factor (dB)	Spurious emissions (dBm)		
5070	Vertical	-43.74	6.01	-37.73	-25	PASS
7605	V	-56.22	10.54	-45.68		
10140	V	-64.56	14.88	-49.68		
5070	Horizontal	-42.13	6.42	-35.71		
7605	H	-50.18	10.24	-39.94		
10140	H	-63.71	14.65	-49.06		

Band	Band 7(QPSK, 20MHz)	Test channel:	Highest
Test mode:		Temperature :	25°C
		Relative Humidity:	56%

Note: Spurious emissions within 30-1000MHz were found more than 20dB below limit line.

Frequency (MHz)	Spurious Emission				Limit (dBm)	Result
	Polarization	Level (dBm)	Correction Factor (dB)	Spurious emissions (dBm)		
5120	Vertical	-47.15	6.09	-41.06	-25	PASS
7680	V	-56.64	10.63	-46.01		
10240	V	-62.49	14.95	-47.54		
5120	Horizontal	-43.94	6.52	-37.42		
7680	H	-52.72	10.43	-42.29		
10240	H	-63.27	14.82	-48.45		

Band	Band 12(QPSK, 10MHz)	Test channel:	Lowest
Test mode:		Temperature :	25°C
		Relative Humidity:	56%

Note: Spurious emissions within 30-1000MHz were found more than 20dB below limit line.

Frequency (MHz)	Spurious Emission				Limit (dBm)	Result
	Polarization	Level (dBm)	Correction Factor (dB)	Spurious emissions (dBm)		
1408	Vertical	-45.52	-5.37	-50.89	-13	PASS
2112	V	-51.73	-4.21	-55.94		
2816	V	-64.60	-1.36	-65.96		
1408	Horizontal	-46.24	-5.24	-51.48		
2112	H	-48.01	-3.97	-51.98		
2816	H	-63.46	-1.12	-64.58		

Band	Band 12(QPSK, 10MHz)	Test channel:	Middle
Test mode:		Temperature :	25°C
		Relative Humidity:	56%

Note: Spurious emissions within 30-1000MHz were found more than 20dB below limit line.

Frequency (MHz)	Spurious Emission				Limit (dBm)	Result
	Polarization	Level (dBm)	Correction Factor (dB)	Spurious emissions (dBm)		
1415	Vertical	-45.46	-5.41	-50.87	-13	PASS
2122.5	V	-56.00	-4.17	-60.17		
2830	V	-64.55	-1.30	-65.85		
1415	Horizontal	-42.49	-5.28	-47.77		
2122.5	H	-48.87	-3.94	-52.81		
2830	H	-62.31	-1.04	-63.35		

Band	Band 12(QPSK, 10MHz)	Test channel:	Highest
Test mode:		Temperature :	25°C
		Relative Humidity:	56%

Note: Spurious emissions within 30-1000MHz were found more than 20dB below limit line.

Frequency (MHz)	Spurious Emission				Limit (dBm)	Result
	Polarization	Level (dBm)	Correction Factor (dB)	Spurious emissions (dBm)		
1422	Vertical	-48.19	-5.45	-53.64	-13	PASS
2133	V	-57.36	-4.13	-61.49		
2844	V	-68.32	-1.24	-69.56		
1422	Horizontal	-42.85	-5.31	-48.16		
2133	H	-51.97	-3.92	-55.89		
2844	H	-62.26	-0.96	-63.22		

Band	Band 13(QPSK, 10MHz)	Test channel:	Lowest
Test mode:		Temperature :	25°C
		Relative Humidity:	56%

Note: Spurious emissions within 30-1000MHz were found more than 20dB below limit line.

Frequency (MHz)	Spurious Emission				Limit (dBm)	Result
	Polarization	Level (dBm)	Correction Factor (dB)	Spurious emissions (dBm)		
1564	Vertical	-53.14	-6.29	-59.43	-40	PASS
2346	V	-50.47	-3.35	-53.82	-13	
3128	V	-65.98	-0.51	-66.49		
1564	Horizontal	-53.30	-6.04	-59.34	-40	
2346	H	-47.78	-3.33	-51.11	-13	
3128	H	-63.12	-0.09	-63.21		

Band	Band 13(QPSK, 10MHz)	Test channel:	Middle
Test mode:		Temperature :	25°C
		Relative Humidity:	56%

Note: Spurious emissions within 30-1000MHz were found more than 20dB below limit line.

Frequency (MHz)	Spurious Emission				Limit (dBm)	Result
	Polarization	Level (dBm)	Correction Factor (dB)	Spurious emissions (dBm)		
1564	Vertical	-53.41	-6.29	-59.70	-40	PASS
2346	V	-55.50	-3.35	-58.85	-13	
3128	V	-62.54	-0.51	-63.05		
1564	Horizontal	-51.48	-6.04	-57.52	-40	
2346	H	-49.45	-3.33	-52.78	-13	
3128	H	-64.50	-0.09	-64.59		

Band	Band 13(QPSK, 10MHz)	Test channel:	Highest
Test mode:		Temperature :	25°C
		Relative Humidity:	56%

Note: Spurious emissions within 30-1000MHz were found more than 20dB below limit line.

Frequency (MHz)	Spurious Emission				Limit (dBm)	Result
	Polarization	Level (dBm)	Correction Factor (dB)	Spurious emissions (dBm)		
1564	Vertical	-53.59	-6.29	-59.88	-40	PASS
2346	V	-55.50	-3.35	-58.85	-13	
3128	V	-66.96	-0.51	-67.47		
1564	Horizontal	-52.74	-6.04	-58.78	-40	
2346	H	-51.35	-3.33	-54.68	-13	
3128	H	-66.07	-0.09	-66.16		

Band	Band 17(QPSK, 10MHz)	Test channel:	Lowest
Test mode:		Temperature :	25°C
		Relative Humidity:	56%

Note: Spurious emissions within 30-1000MHz were found more than 20dB below limit line.

Frequency (MHz)	Spurious Emission				Limit (dBm)	Result
	Polarization	Level (dBm)	Correction Factor (dB)	Spurious emissions (dBm)		
1418	Vertical	-45.94	-5.43	-51.37	-13	PASS
2127	V	-49.49	-4.16	-53.65		
2836	V	-66.73	-1.27	-68.00		
1418	Horizontal	-46.18	-5.29	-51.47		
2127	H	-48.92	-3.93	-52.85		
2836	H	-63.35	-1.01	-64.36		

Band	Band 17(QPSK, 10MHz)	Test channel:	Middle
Test mode:		Temperature :	25°C
		Relative Humidity:	56%

Note: Spurious emissions within 30-1000MHz were found more than 20dB below limit line.

Frequency (MHz)	Spurious Emission				Limit (dBm)	Result
	Polarization	Level (dBm)	Correction Factor (dB)	Spurious emissions (dBm)		
1420	Vertical	-44.11	-5.44	-49.55	-13	PASS
2130	V	-56.07	-4.14	-60.21		
2840	V	-63.56	-1.25	-64.81		
1420	Horizontal	-41.53	-5.30	-46.83		
2130	H	-50.56	-3.92	-54.48		
2840	H	-64.90	-0.99	-65.89		

Band	Band 17(QPSK, 10MHz)	Test channel:	Highest
Test mode:		Temperature :	25°C
		Relative Humidity:	56%

Note: Spurious emissions within 30-1000MHz were found more than 20dB below limit line.

Frequency (MHz)	Spurious Emission				Limit (dBm)	Result
	Polarization	Level (dBm)	Correction Factor (dB)	Spurious emissions (dBm)		
1422	Vertical	-55.88	-5.45	-61.33	-13	PASS
2133	V	-64.79	-4.13	-68.92		
2844	V	-50.20	-1.24	-51.44		
1422	Horizontal	-51.70	-5.31	-57.01		
2133	H	53.10	-3.92	49.18		
2844	H	-57.21	-0.96	-58.17		

Band	Band 25(QPSK, 20MHz)	Test channel:	Lowest
Test mode:		Temperature :	25°C
		Relative Humidity:	56%

Note: Spurious emissions within 30-1000MHz were found more than 20dB below limit line.

Frequency (MHz)	Spurious Emission				Limit (dBm)	Result
	Polarization	Level (dBm)	Correction Factor (dB)	Spurious emissions (dBm)		
3720	Vertical	-45.86	-6.46	-52.32	-13	PASS
5580	V	-50.26	-2.77	-53.03		
7440	V	-62.53	-0.48	-63.01		
3720	Horizontal	-45.08	-6.31	-51.39		
5580	H	-48.19	-2.88	-51.07		
7440	H	-62.44	-0.10	-62.54		

Band	Band 25(QPSK, 20MHz)	Test channel:	Middle
Test mode:		Temperature :	25°C
		Relative Humidity:	56%

Note: Spurious emissions within 30-1000MHz were found more than 20dB below limit line.

Frequency (MHz)	Spurious Emission				Limit (dBm)	Result
	Polarization	Level (dBm)	Correction Factor (dB)	Spurious emissions (dBm)		
3720	Vertical	-43.81	-6.45	-50.26	-13	PASS
5580	V	-54.79	-2.73	-57.52		
7440	V	-62.81	-0.47	-63.28		
3720	Horizontal	-42.19	-6.32	-48.51		
5580	H	-49.23	-2.84	-52.07		
7440	H	-64.09	-0.10	-64.19		

Band	Band 25(QPSK, 20MHz)	Test channel:	Highest
Test mode:		Temperature :	25°C
		Relative Humidity:	56%

Note: Spurious emissions within 30-1000MHz were found more than 20dB below limit line.

Frequency (MHz)	Spurious Emission				Limit (dBm)	Result
	Polarization	Level (dBm)	Correction Factor (dB)	Spurious emissions (dBm)		
3810	Vertical	-53.20	-6.45	-59.65	-13	PASS
5715	V	-62.42	-2.70	-65.12		
7620	V	-41.83	-0.47	-42.30		
3810	Horizontal	-50.54	-6.33	-56.87		
5715	H	-58.83	-2.80	-61.63		
7620	H	-56.18	-0.10	-56.28		

Band	Band 26-1(QPSK, 5MHz)	Test channel:	Lowest
Test mode:		Temperature:	25°C
		Relative Humidity:	56%

Note: Spurious emissions within 30-1000MHz were found more than 20dB below limit line.

Frequency (MHz)	Spurious Emission				Limit (dBm)	Result
	Polarization	Level (dBm)	Correction Factor (dB)	Spurious emissions (dBm)		
1633	Vertical	-47.89	-6.48	-54.37	-13	PASS
2449.5	V	-52.78	-2.97	-55.75		
3266	V	-61.53	-0.49	-62.02		
1633	Horizontal	-47.71	-6.26	-53.97		
2449.5	H	-48.46	-3.05	-51.51		
3266	H	-63.19	-0.10	-63.29		

Band	Band 26-1(QPSK, 5MHz)	Test channel:	Middle
Test mode:		Temperature:	25°C
		Relative Humidity:	56%

Note: Spurious emissions within 30-1000MHz were found more than 20dB below limit line.

Frequency (MHz)	Spurious Emission				Limit (dBm)	Result
	Polarization	Level (dBm)	Correction Factor (dB)	Spurious emissions (dBm)		
1638	Vertical	-47.92	-6.48	-54.40	-13	PASS
2457	V	-56.01	-2.95	-58.96		
3276	V	-62.70	-0.49	-63.19		
1638	Horizontal	-43.00	-6.27	-49.27		
2457	H	-50.37	-3.03	-53.40		
3276	H	-60.42	-0.10	-60.52		

Band	Band 26-1(QPSK, 5MHz)	Test channel:	Highest
Test mode:		Temperature:	25°C
		Relative Humidity:	56%

Note: Spurious emissions within 30-1000MHz were found more than 20dB below limit line.

Frequency (MHz)	Spurious Emission				Limit (dBm)	Result
	Polarization	Level (dBm)	Correction Factor (dB)	Spurious emissions (dBm)		
1643	Vertical	-48.39	-6.47	-54.86	-13	PASS
2464.5	V	-59.07	-2.92	-61.99		
3286	V	-61.59	-0.48	-62.07		
1643	Horizontal	-44.71	-6.28	-50.99		
2464.5	H	-52.51	-3.01	-55.52		
3286	H	-60.53	-0.10	-60.63		

Band	Band 26-2(QPSK, 15MHz)				Test channel:	Lowest
Test mode:					Temperature:	25°C
					Relative Humidity:	56%
Note: Spurious emissions within 30-1000MHz were found more than 20dB below limit line.						
Frequency (MHz)	Spurious Emission				Limit (dBm)	Result
	Polarization	Level (dBm)	Correction Factor (dB)	Spurious emissions (dBm)		
1663	Vertical	-49.19	-6.46	-55.65	-13	PASS
2494.5	V	-53.98	-2.81	-56.79		
3326	V	-61.20	-0.48	-61.68		
1663	Horizontal	-47.90	-6.30	-54.20		
2494.5	H	-50.45	-2.93	-53.38		
3326	H	-60.20	-0.10	-60.30		

Band	Band 26-2(QPSK, 15MHz)				Test channel:	Middle
Test mode:					Temperature:	25°C
					Relative Humidity:	56%
Note: Spurious emissions within 30-1000MHz were found more than 20dB below limit line.						
Frequency (MHz)	Spurious Emission				Limit (dBm)	Result
	Polarization	Level (dBm)	Correction Factor (dB)	Spurious emissions (dBm)		
1673	Vertical	-47.39	-6.46	-53.85	-13	PASS
2509.5	V	-57.46	-2.75	-60.21		
3346	V	-67.14	-0.47	-67.61		
1673	Horizontal	-43.65	-6.32	-49.97		
2509.5	H	-50.85	-2.86	-53.71		
3346	H	-66.75	-0.10	-66.85		

Band	Band 26-2(QPSK, 15MHz)				Test channel:	Highest
Test mode:					Temperature:	25°C
					Relative Humidity:	56%
Note: Spurious emissions within 30-1000MHz were found more than 20dB below limit line.						
Frequency (MHz)	Spurious Emission				Limit (dBm)	Result
	Polarization	Level (dBm)	Correction Factor (dB)	Spurious emissions (dBm)		
1683	Vertical	-48.12	-6.45	-54.57	-13	PASS
2524.5	V	-58.95	-2.68	-61.63		
3366	V	-59.62	-0.47	-60.09		
1683	Horizontal	-44.84	-6.33	-51.17		
2524.5	H	-52.43	-2.77	-55.20		
3366	H	-59.85	-0.10	-59.95		

Band	Band 38(QPSK, 20MHz)	Test channel:	Lowest
Test mode:		Temperature:	25°C
		Relative Humidity:	56%

Note: Spurious emissions within 30-1000MHz were found more than 20dB below limit line.

Frequency (MHz)	Spurious Emission				Limit (dBm)	Result
	Polarization	Level (dBm)	Correction Factor (dB)	Spurious emissions (dBm)		
5160	Vertical	-46.30	5.92	-40.38	-25	PASS
7740	V	-52.27	10.43	-41.84		
10320	V	-66.68	14.81	-51.87		
5160	Horizontal	-46.81	6.31	-40.50		
7740	H	-49.01	10.03	-38.98		
10320	H	-65.28	14.45	-50.83		

Band	Band 38(QPSK, 20MHz)	Test channel:	Middle
Test mode:		Temperature:	25°C
		Relative Humidity:	56%

Note: Spurious emissions within 30-1000MHz were found more than 20dB below limit line.

Frequency (MHz)	Spurious Emission				Limit (dBm)	Result
	Polarization	Level (dBm)	Correction Factor (dB)	Spurious emissions (dBm)		
5190	Vertical	-47.51	6.19	-41.32	-25	PASS
7785	V	-56.35	10.74	-45.61		
10380	V	-66.99	15.04	-51.95		
5190	Horizontal	-47.27	6.64	-40.63		
7785	H	-49.35	10.68	-38.67		
10380	H	-64.79	15.04	-49.75		

Band	Band 38(QPSK, 20MHz)	Test channel:	Highest
Test mode:		Temperature:	25°C
		Relative Humidity:	56%

Note: Spurious emissions within 30-1000MHz were found more than 20dB below limit line.

Frequency (MHz)	Spurious Emission				Limit (dBm)	Result
	Polarization	Level (dBm)	Correction Factor (dB)	Spurious emissions (dBm)		
5220	Vertical	-48.31	6.46	-41.85	-25	PASS
7830	V	-57.77	11.15	-46.62		
10440	V	-69.20	15.28	-53.92		
5220	Horizontal	-48.20	6.97	-41.23		
7830	H	-58.79	11.37	-47.42		
10440	H	-68.76	15.63	-53.13		

Band	Band 40-1(QPSK, 10MHz)	Test channel:	Lowest
Test mode:		Temperature:	25°C
		Relative Humidity:	56%

Note: Spurious emissions within 30-1000MHz were found more than 20dB below limit line.

Frequency (MHz)	Spurious Emission				Limit (dBm)	Result
	Polarization	Level (dBm)	Correction Factor (dB)	Spurious emissions (dBm)		
4615	Vertical	-48.60	5.92	-42.68	-40	PASS
6922.5	V	-57.27	10.43	-46.84		
9230	V	-66.68	14.81	-51.87		
4615	Horizontal	-49.84	6.31	-43.53		
6922.5	H	-56.94	10.03	-46.91		
9230	H	-65.28	14.45	-50.83		

Band	Band 40-1(QPSK, 20MHz)	Test channel:	Middle
Test mode:		Temperature:	25°C
		Relative Humidity:	56%

Note: Spurious emissions within 30-1000MHz were found more than 20dB below limit line.

Frequency (MHz)	Spurious Emission				Limit (dBm)	Result
	Polarization	Level (dBm)	Correction Factor (dB)	Spurious emissions (dBm)		
4620	Vertical	-47.51	6.19	-41.32	-40	PASS
6930	V	-56.35	10.74	-45.61		
9240	V	-66.99	15.04	-51.95		
4620	Horizontal	-48.27	6.64	-41.63		
6930	H	-57.84	10.68	-47.16		
9240	H	-64.79	15.04	-49.75		

Band	Band 40-1(QPSK, 20MHz)	Test channel:	Highest
Test mode:		Temperature:	25°C
		Relative Humidity:	56%

Note: Spurious emissions within 30-1000MHz were found more than 20dB below limit line.

Frequency (MHz)	Spurious Emission				Limit (dBm)	Result
	Polarization	Level (dBm)	Correction Factor (dB)	Spurious emissions (dBm)		
4625	Vertical	-48.31	6.46	-41.85	-40	PASS
6937.5	V	-57.77	11.15	-46.62		
9250	V	-69.20	15.28	-53.92		
4625	Horizontal	-49.09	6.97	-42.12		
6937.5	H	-56.73	11.37	-45.36		
9250	H	-68.76	15.63	-53.13		

Band	Band 40-2(QPSK, 10MHz)	Test channel:	Lowest
Test mode:		Temperature:	25°C
		Relative Humidity:	56%

Note: Spurious emissions within 30-1000MHz were found more than 20dB below limit line.

Frequency (MHz)	Spurious Emission				Limit (dBm)	Result
	Polarization	Level (dBm)	Correction Factor (dB)	Spurious emissions (dBm)		
4705	Vertical	-47.20	5.92	-41.28	-40	PASS
7057.5	V	-54.71	10.43	-44.28		
9410	V	-66.68	14.81	-51.87		
4705	Horizontal	-48.79	6.31	-42.48		
7057.5	H	-54.26	10.03	-44.23		
9410	H	-65.28	14.45	-50.83		

Band	Band 40-2(QPSK, 20MHz)	Test channel:	Middle
Test mode:		Temperature:	25°C
		Relative Humidity:	56%

Note: Spurious emissions within 30-1000MHz were found more than 20dB below limit line.

Frequency (MHz)	Spurious Emission				Limit (dBm)	Result
	Polarization	Level (dBm)	Correction Factor (dB)	Spurious emissions (dBm)		
4710	Vertical	-50.27	6.19	-44.08	-40	PASS
7065	V	-56.35	10.74	-45.61		
9420	V	-66.99	15.04	-51.95		
4710	Horizontal	-50.79	6.64	-44.15		
7065	H	-53.83	10.68	-43.15		
9420	H	-68.09	15.04	-53.05		

Band	Band 40-2(QPSK, 20MHz)	Test channel:	Highest
Test mode:		Temperature:	25°C
		Relative Humidity:	56%

Note: Spurious emissions within 30-1000MHz were found more than 20dB below limit line.

Frequency (MHz)	Spurious Emission				Limit (dBm)	Result
	Polarization	Level (dBm)	Correction Factor (dB)	Spurious emissions (dBm)		
4715	Vertical	-48.31	6.46	-41.85	-40	PASS
7072.5	V	-57.77	11.15	-46.62		
9430	V	-69.20	15.28	-53.92		
4715	Horizontal	-50.79	6.97	-43.82		
7072.5	H	-57.27	11.37	-45.90		
9430	H	-68.76	15.63	-53.13		

Band	Band 41(QPSK, 20MHz)	Test channel:	Lowest
Test mode:		Temperature:	25°C
		Relative Humidity:	56%

Note: Spurious emissions within 30-1000MHz were found more than 20dB below limit line.

Frequency (MHz)	Spurious Emission				Limit (dBm)	Result
	Polarization	Level (dBm)	Correction Factor (dB)	Spurious emissions (dBm)		
5012	Vertical	-46.30	5.92	-40.38	-25	PASS
7518	V	-52.27	10.43	-41.84		
10024	V	-66.68	14.81	-51.87		
5012	Horizontal	-46.81	6.31	-40.50		
7518	H	-52.83	10.03	-42.80		
10024	H	-65.28	14.45	-50.83		

Band	Band 41(QPSK, 20MHz)	Test channel:	Middle
Test mode:		Temperature:	25°C
		Relative Humidity:	56%

Note: Spurious emissions within 30-1000MHz were found more than 20dB below limit line.

Frequency (MHz)	Spurious Emission				Limit (dBm)	Result
	Polarization	Level (dBm)	Correction Factor (dB)	Spurious emissions (dBm)		
5186	Vertical	-47.51	6.19	-41.32	-25	PASS
7779	V	-56.35	10.74	-45.61		
10372	V	-66.99	15.04	-51.95		
5186	Horizontal	-47.84	6.64	-41.20		
7779	H	-49.35	10.68	-38.67		
10372	H	-64.79	15.04	-49.75		

Band	Band 41(QPSK, 20MHz)	Test channel:	Highest
Test mode:		Temperature:	25°C
		Relative Humidity:	56%

Note: Spurious emissions within 30-1000MHz were found more than 20dB below limit line.

Frequency (MHz)	Spurious Emission				Limit (dBm)	Result
	Polarization	Level (dBm)	Correction Factor (dB)	Spurious emissions (dBm)		
5360	Vertical	-48.31	6.46	-41.85	-25	PASS
8040	V	-57.77	11.15	-46.62		
10720	V	-69.20	15.28	-53.92		
5360	Horizontal	-52.84	6.97	-45.87		
8040	H	-55.83	11.37	-44.46		
10720	H	-68.76	15.63	-53.13		

Band	Band 66(QPSK, 20MHz)	Test channel:	Lowest
Test mode:		Temperature :	25°C
		Relative Humidity:	56%

Note: Spurious emissions within 30-1000MHz were found more than 20dB below limit line.

Frequency (MHz)	Spurious Emission				Limit (dBm)	Result
	Polarization	Level (dBm)	Correction Factor (dB)	Spurious emissions (dBm)		
3440	Vertical	-46.70	-0.46	-47.16	-13	PASS
5160	V	-50.83	6.15	-44.68		
6880	V	-66.15	9.78	-56.37		
3440	Horizontal	-46.29	-0.11	-46.40		
5160	H	-50.02	6.59	-43.43		
6880	H	-61.80	9.70	-52.10		

Band	Band 66(QPSK, 20MHz)	Test channel:	Middle
Test mode:		Temperature :	25°C
		Relative Humidity:	56%

Note: Spurious emissions within 30-1000MHz were found more than 20dB below limit line.

Frequency (MHz)	Spurious Emission				Limit (dBm)	Result
	Polarization	Level (dBm)	Correction Factor (dB)	Spurious emissions (dBm)		
3490	Vertical	-43.37	-0.45	-43.82	-13	PASS
5235	V	-55.23	6.27	-48.96		
6980	V	-64.00	10.21	-53.79		
3490	Horizontal	-41.24	-0.11	-41.35		
5235	H	-50.17	6.73	-43.44		
6980	H	-63.44	10.07	-53.37		

Band	Band 66(QPSK, 20MHz)	Test channel:	Highest
Test mode:		Temperature :	25°C
		Relative Humidity:	56%

Note: Spurious emissions within 30-1000MHz were found more than 20dB below limit line.

Frequency (MHz)	Spurious Emission				Limit (dBm)	Result
	Polarization	Level (dBm)	Correction Factor (dB)	Spurious emissions (dBm)		
3540	Vertical	-46.58	-0.18	-46.76	-13	PASS
5310	V	-56.32	6.38	-49.94		
7080	V	-67.94	10.31	-57.63		
3540	Horizontal	-41.67	0.29	-41.38		
5310	H	-51.78	6.87	-44.91		
7080	H	-66.87	10.11	-56.76		

Band	Band 71(QPSK, 20MHz)	Test channel:	Lowest
Test mode:		Temperature :	25°C
		Relative Humidity:	56%

Note: Spurious emissions within 30-1000MHz were found more than 20dB below limit line.

Frequency (MHz)	Spurious Emission				Limit (dBm)	Result
	Polarization	Level (dBm)	Correction Factor (dB)	Spurious emissions (dBm)		
3440	Vertical	-46.70	-0.46	-47.16	-13	PASS
5160	V	-50.83	6.15	-44.68		
6880	V	-66.15	9.78	-56.37		
3440	Horizontal	-46.29	-0.11	-46.40		
5160	H	-50.02	6.59	-43.43		
6880	H	-61.80	9.70	-52.10		

Band	Band 71(QPSK, 20MHz)	Test channel:	Middle
Test mode:		Temperature :	25°C
		Relative Humidity:	56%

Note: Spurious emissions within 30-1000MHz were found more than 20dB below limit line.

Frequency (MHz)	Spurious Emission				Limit (dBm)	Result
	Polarization	Level (dBm)	Correction Factor (dB)	Spurious emissions (dBm)		
3490	Vertical	-43.37	-0.45	-43.82	-13	PASS
5235	V	-55.23	6.27	-48.96		
6980	V	-64.00	10.21	-53.79		
3490	Horizontal	-41.24	-0.11	-41.35		
5235	H	-50.17	6.73	-43.44		
6980	H	-63.44	10.07	-53.37		

Band	Band 71(QPSK, 20MHz)	Test channel:	Highest
Test mode:		Temperature :	25°C
		Relative Humidity:	56%

Note: Spurious emissions within 30-1000MHz were found more than 20dB below limit line.

Frequency (MHz)	Spurious Emission				Limit (dBm)	Result
	Polarization	Level (dBm)	Correction Factor (dB)	Spurious emissions (dBm)		
3558.6	Vertical	-46.58	-0.18	-46.76	-13	PASS
5337.9	V	-56.32	6.38	-49.94		
7117.2	V	-67.94	10.31	-57.63		
3558.6	Horizontal	-41.67	0.29	-41.38		
5337.9	H	-51.78	6.87	-44.91		
7117.2	H	-66.87	10.11	-56.76		

5.6. Frequency Stability Measurement

5.6.1. Test Specification

Test Requirement:	FCC part 27.54, FCC part 22.355, 24.235
Test Method:	FCC Part 2.1055
Limit:	±2.5 ppm
Test Setup:	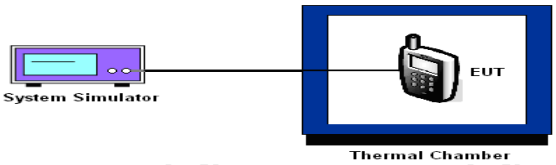
Test Procedure:	**Test Procedures for Temperature Variation** 1. The testing follows FCC KDB 971168 D01v03 Section 9.0. 2. The EUT was set up in the thermal chamber and connected with the system simulator. 3. With power OFF, the temperature was decreased to -30°C and the EUT was stabilized before testing. Power was applied and the maximum change in frequency was recorded within one minute. 4. With power OFF, the temperature was raised in 10°C steps up to 50°C. The EUT was stabilized at each step for at least half an hour. Power was applied and the maximum frequency change was recorded within one minute. **Test Procedures for Voltage Variation** 1. The testing follows FCC KDB 971168 D01v03 Section 9.0. 2. The EUT was placed in a temperature chamber at 25±5° C and connected with the system simulator. 3. The power supply voltage to the EUT was varied from BEP to 115% of the nominal value measured at the input to the EUT. 4. The variation in frequency was measured for the worst case.
Test Result:	PASS

5.6.2. Test Instruments

Equipment	Manufacturer	Model	Serial Number	Calibration Due
Wideband Radio Communication Tester	R&S	CMW500	165017	Jan. 31, 2025
Programable tempratuce and humidity chamber	JQ	JQ-2000	/	Jun. 26, 2025
DC power supply	Kingrang	KR3005K	/	Jun. 26, 2025

Appendix A: Test Result of Conducted Test

please refer to appendix document of test date.

Appendix B: Photographs of Test Setup

Please refer to document Appendix No.: TCT240910E034-A

Appendix C: Photographs of EUT

Please refer to document Appendix No.: TCT240910E034-B & TCT240910E034-C

********END OF REPORT********