litrapro™

BI-COLOR
3000-6000K

THE WORLD'S FIRST
FULL SPECTRUM COMPACT LIGHT.™

Litra, LLC ©

litra
PROFESSIONAL ADVENTURE LIGHTING

SPECSHEET

Intelligent Design
- 0-100% fully dimmable light
- Blended/smooth lux beam (No center hot spot)
- Battery life up to 10 hrs (low) 1 hr (high)
- Standard Micro-USB charge port
- Use cordless or with external power
- Intelligent thermal management
- OLED display

Ultra Rugged
- Waterproof to 27m / 90ft.
- 810G MIL SPEC
- Aluminum body

Multiple Mounting Options
- 2 x 1/4" 20 mounts on the bottom and side
- Fits seamlessly on standard cameras and tripods
- Endless mounting options

Best in Class LED Technology
- 1200 Lumen
- Adjustable Color Temperature from 3000 - 6000k
- Flicker free at all Sutter angles
- Factory Calibrated LEDs to +/- 100k accuracy
- Full Spectrum LEDs with no green spike and enhanced red spectrum

Bluetooth App
- Single or multiple light control
- Factory or user defined presets
- Available on Apple and Android

Size	70mm X 50mm X 30mm 2.75in x 2in x 1.2in
Weight	170 Grams / 6 oz.
Color Temp.	3000 - 6000K
Color Render Index	>95
Lumen	1200lm
Beam Angle	70°
Battery Life	>10 hr low >45 min on high
Charging	Standard Micro-USB Charge Port
Ruggedness	810G MIL SPEC Shock/Drop/Thermal/Salt Spray
Mounting	2 x 1/4 20 Side and Bottom

litrapro™

litra
PROFESSIONAL ADVENTURE LIGHTING

ACCESSORIES

IN THE BOX.

DIFFUSER BULB

DSLR MOUNT

*Charge cord and carry bag also included

OPTIONAL ACCESSORIES.

BARN DOOR

SOFT BOX

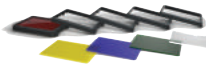

FILTER SET

DOUBLE MOUNT

TRIPLE MOUNT

HANDLE

TRIPOD

COLD SHOE BALL MOUNT

LITRA.COM
INFO@LITRA.COM
1125 RANCHO CARMEL DR. #500592
SAN DIEGO, CA 92150
888.466.1566

litrapro™

litra
PROFESSIONAL ADVENTURE LIGHTING

FUNCTION

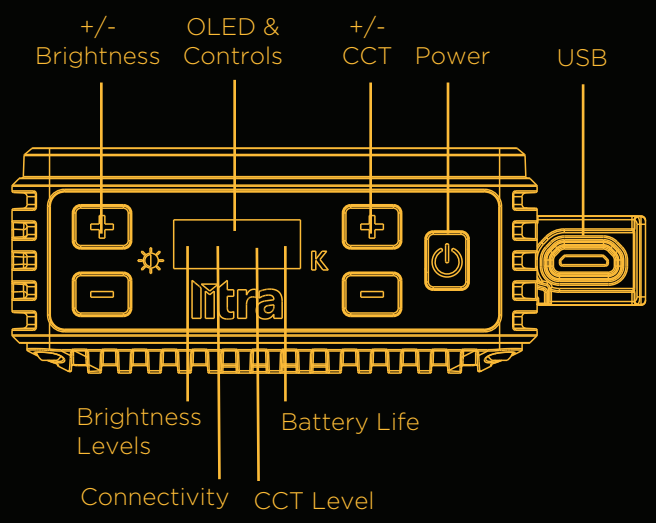

Set Up:
1. Download Litra App.
2. Power LitraPro on.
3. Connect LitraPro in App.

For step-by-step instructions go to:
litra.com/pages/quickstart

FAQ:

1. What is the CCT / Light Color range for the LitraPro?
The LitraPro has a CCT range from 3000k to 6000k. The manual and App will change the CCT in 100 k increments.
2. What is the max light output for the LitraPro?
The LitraPro has a max light output of 1200 lumen
3. How long will the LitraPro last on high?
The LitraPro will last for 45 mins on the highest setting and over 10 hrs at 10% brightness. The LitraPro can also be run on external power for longer run times.
4. Is the LitraPro waterproof?
Yes, the LitraPro is waterproof up to 90 ft / 30 m.
5. What is the CRI on the LitraPro?
The LitraPro has a CRI of up to 95 CRI.

For more FAQ's visit litra.com/pages/faqs

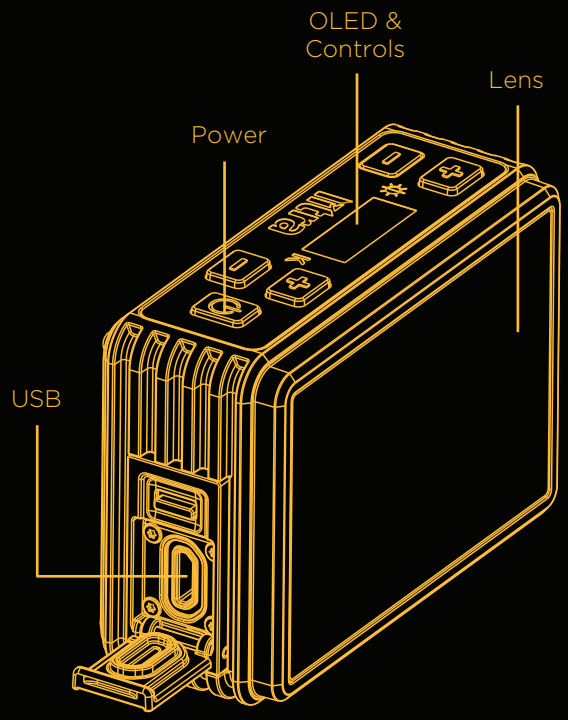

Product Registration:
To register your product please go to
litra.com/pages/product-registration

Warranty:
Litra warrants LitraTorch™ against defects in material or workmanship for a period of 1 year from the original date of purchase of the product by the original end user (the "Warranty Period"). Litra does not warrant, and is not responsible for, any device made by anyone other than

See full warranty at litra.com/pages/warranty

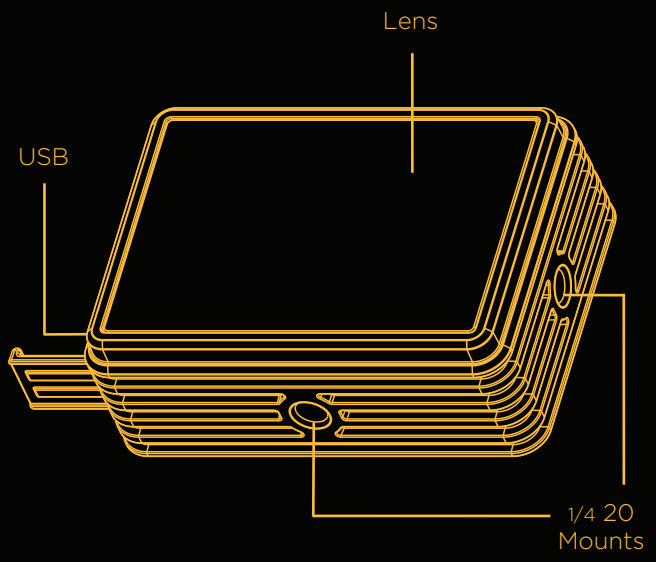

litrapro™

litra
PROFESSIONAL ADVENTURE LIGHTING

MOREINFO

FCC Warning:
This device complies with part 15 of the FCC Rules. Operation is subject to the following two conditions: (1) This device may not cause harmful interference, and (2) this device must accept any interference received, including interference that may cause undesired operation.

Any changes or modifications not expressly approved by the party responsible for compliance could void the user's authority to operate the equipment.

Note: This equipment has been tested and found to comply with the limits for a Class B digital device, pursuant to part 15 of the FCC Rules. These limits are designed to provide reasonable protection against harmful interference in a residential installation. This equipment generates, uses and can radiate radio frequency energy and, if not installed and used in accordance with the instructions, may cause harmful interference to radio communications. However, there is no guarantee that interference will not occur in a particular installation. If this equipment does cause harmful interference to radio or television reception, which can be determined by turning the equipment off and on, the user is encouraged to try to correct the interference by one or more of the following measures:

— Reorient or relocate the receiving antenna.
— Increase the separation between the equipment and receiver.
— Connect the equipment into an outlet on a circuit different from that to which the receiver is connected.
— Consult the dealer or an experienced radio/TV technician for help.

SAR Warning:
The equipment complies with FCC radiation exposure limits set forth for an uncontrolled environment.

This transmitter must not be co-located or operating in conjunction with any other antenna or transmitter.

WARNING
MODEL: LP1200
INPUT: 5V DC, 2A
OUTPUT: 12W

litrapro™