EUROFINS ELECTRICAL TESTING SERVICE (SHENZHEN) CO., LTD.

RADIO TEST - REPORT

FCC/IC Compliance Test Report for

Product name: LitraStudio

Model name: LS3000

FCC ID: 2AQSS-LS3000

IC: 25638-LS3000

Test Report Number: EFGX19100021-IE-02-E01

Content

1	**General Information**	**3**
1.1	Notes	3
1.2	Testing laboratory	4
1.3	Details of approval holder	4
1.4	Application details	4
1.5	Test item	4
1.6	Test standards	5
2	**Technical test**	**6**
2.1	Summary of test results	6
2.2	Test environment	6
2.3	Measurement uncertainty	6
2.4	Test mode	6
2.5	Test equipment utilized	7
2.6	Auxiliary Equipment Used during Test:	7
2.7	Test software information:	7
2.8	Customized Configurations	7
2.9	Test Environments	7
2.10	Test results	8
3	**Technical Requirement**	**9**
3.1	Conducted Emission	9
3.2	Conducted Peak output power	12
3.3	6dB bandwidth	13
3.4	Frequency Stability	14
3.5	99% bandwidth	15
3.6	Power spectral density	16
3.7	Spurious RF conducted emissions	17
3.8	Band edge	18
3.9	Spurious radiated emissions for transmitter	19

1 General Information

1.1 Notes

The results of this test report relate exclusively to the item tested as specified in chapter "Description of test item" and are not transferable to any other test items.

Eurofins Electrical Testing Service (Shenzhen) Co., Ltd. is not responsible for any generalisations and conclusions drawn from this report. Any modification of the test item can lead to invalidity of test results and this test report may therefore be not applicable to the modified test item.

The test report may only be reproduced or published in full. Reproducing or publishing extracts of the report requires the prior written approval of the Eurofins Electrical Testing Service (Shenzhen) Co., Ltd.

This document is subject to the General Terms and Conditions and the Testing and Certification System of Eurofins Electrical Testing Service (Shenzhen) Co., Ltd., available on request or accessible at www.eurofins.com.

Operator:

2019-11-25		Bruce Zheng / Project Engineer	Bruce Zheng
Date	Eurofins-Lab.	Name / Title	Signature

Technical responsibility for area of testing:

2019-11-25		Oliver Lai / RF Supervisor	
Date	Eurofins-Lab.	Name / Title	Signature

1.2 Testing laboratory

Eurofins Electrical Testing Service (Shenzhen) Co., Ltd.
1st Floor, Building 2, Chungu, Meisheng Huigu Science and Technology Park, No. 83 Dabao Road, Bao'an District, Shenzhen. P.R.China.
Telephone : +86-755-82911867
Fax : +86-755-82910749
The Laboratory has passed the Accreditation by the American Association for Laboratory Accrediation (A2LA). The Accreditation number is 5376.01
The Laboratory has been listed by industry Canada to perform electromagnetic emission measurements, The CAB identifier is CN0088

1.3 Details of approval holder

Name	:	Litra, LLC
Address	:	11251 Rancho Carmel Dr. #500592 San Diego CA 92150
Telephone	:	N/A
Fax	:	N/A

1.4 Application details

Date of receipt of application	:	September 23, 2019
Date of receipt of test item	:	September 26, 2019
Date of test	:	September 27, 2019 – October 14, 2019
Date of issue		November 25, 2019

1.5 Test item

Product type	:	LitraStudio
Model name	:	LS3000
Brand	:	Litra
Serial number	:	N/A
Ratings	:	DC 11.1V (built-in Li-ion battery) DC 5-20VDC (charging voltage), Max.: 3A 30W Charging by AC adapter
Test voltage	:	120V~, 60Hz (for AC adapter) DC 11.1V
FCC ID	:	2AQSS-LS3000
IC	:	25638-LS3000
PMN	:	LitraStudio
HVIN	:	V4
Additional information	:	N/A

RadioTechnical data

Frequency range	:	2402MHz – 2480MHz
Radio Tech.	:	Bluetooth Low Energy
Frequency channel	:	39 Channels
Modulation	:	GFSK
Antenna type	:	Internal antenna
Antenna gain	:	0dBi

Radio module

Type	:	Bluetooth LE
Model	:	CC2640
Manufacturer	:	Ti

1.6 Test standards

Test Standards	
FCC Part 15 Subpart C 10-1-2018 Edition	PART 15 - RADIO FREQUENCY DEVICES Subpart C - Intentional Radiators
RSS-247 Issue 2 February 2017	RSS-247 — Digital Transmission Systems (DTSs), Frequency Hopping Systems (FHSs) and Licence-Exempt Local Area Network (LE-LAN) Devices
RSS-GEN Issue 5 March 2019	RSS-Gen — General Requirements for Compliance of Radio Apparatus

Test Method

1: ANSI C63.4-2014, American National Standard for Methods of Measurement of Radio-Noise Emissions from Low-Voltage Electrical and Electronic Equipment in the Range of 9 kHz to 40 GHz.
2: ANSI C63.10-2013, American National Standard for Testing Unlicensed Wireless Devices.
3: KDB558074 D01 15.247 Meas Guidance v05r02

2 Technical test

2.1 Summary of test results

No deviations from the technical specification(s) were ascertained in the course of the tests performed. ☒

or

The deviations as specified were ascertained in the course of the tests performed. ☐

2.2 Test environment

Temperature	: 20	...	25°C
Relative humidity content	: 30	...	60%
Air pressure	: 100	...	101kPa

2.3 Measurement uncertainty

The uncertainty is calculated using the methods suggested in the "Guide to the Expression of Uncertainty in Measurement" (GUM) published by ISO.

System Measurement Uncertainty	
Test Items	Extended Uncertainty
Uncertainty for Conducted RF test	RF Power Conducted: 1.16dB Frequency test involved: 1.05×10-7 or 1%
Uncertainty for Conducted Emission 150kHz-30MHz	1.96dB
Uncertainty for Radiated Spurious Emission 25MHz-3000MHz	Horizontal: 4.46dB; Vertical: 4.54dB;
Uncertainty for Radiated Spurious Emission 3000MHz-18000MHz	Horizontal: 4.42dB; Vertical: 4.41dB;
Uncertainty for Radiated Spurious Emission 18000MHz-40000MHz	Horizontal: 4.63dB; Vertical: 4.62dB;

2.4 Test mode

The EUT was set at continuously transmitting and receiving mode (CH0, CH19, CH39) during the test.

2.5 Test equipment utilized

EQUIPMENT ID	EQUIPMENT NAME	MODEL NO.	CAL. DUE DATE
23-2-13-12	Signal Analyzer	N9010B-544	2020-04-14
23-2-13-13	BT/WLAN Tester	CMW270	2020-04-14
23-2-13-14	Signal Generator	N5183B-520	2020-05-05
23-2-13-15	Vector Signal Generator	N5182B-506	2020-04-14
23-2-10-43	Switch and Control Unit	ERIT-E-JS0806-2	2020-04-14
23-2-10-45	temperature test chamber	SG-80-CC-2	2020-05-05
23-2-13-05	EMI Test Receiver	ESR3	2020-04-16
23-2-13-01	EMI Test Receiver	ESR7	2020-04-04
23-2-13-02	Signal Analyzer	N9020B-544	2020-05-05
23-2-12-01	Active Loop Antenna	FMZB 1519B	2020-04-20
23-2-12-02	TRILOG Broadband Antenna	VULB9168	2020-04-13
23-2-12-03	Horn Antenna	3117	2020-04-13
23-2-12-04	Horn Antenna	BBHA 9170	2020-04-17
23-2-12-05	Universal Antenna Stand	CLSA0110	2020-04-13
23-2-10-01	Preamplifier	BBV9745	2020-04-15
23-2-10-02	Preamplifier	EMC001330	2020-04-15
23-2-10-03	Preamplifier	EMC051845SE	2020-05-06
23-2-10-14	Switch and Control Unit	ERIT-E-JS0806-SF1	N/A

2.6 Auxiliary Equipment Used during Test:

DESCRIPTION	MANUFACTURER	MODEL NO.	S/N
Laptop	LENOVO	TP00096A	PF-1QH0LV

2.7 Test software information:

Test Software Version	Setup_SmartRF_Studio_7-2.9.0		
Modulation	Setting TX Power	TX Pattern	Packet Type
GFSK	5 dB	1M	Contiune TX

2.8 Customized Configurations

EUT Conf.	Signal Description	Operating Frequency	Duty Cycle
TM1_Ch0	GFSK	Ch No. 0 / 2402 MHz	100%
TM1_Ch19	GFSK	Ch No. 19 / 2440 MHz	100%
TM1_Ch39	GFSK	Ch No. 39 / 2480 MHz	100%

2.9 Test Environments

Enviroment Parameter	Temperature	Voltage	Relative Humidity
101.7Kpa	26.4	5.0Vdc	67.2%

2.10 Test results

☒ 1st test ☐ test after modification ☐ production test

Technical Requirements					
FCC Part 15 Subpart C/RSS-247 Issue 2/RSS-Gen Issue 5					
Test Condition			Test Result	Verdict	Test Site
§15.207	RSS-GEN 8.8	Conducted emission AC power port	See page 10-11	Pass	Site 1
§15.247(b)(1)	RSS-247 Clause 5.4(b)	Conducted output power for FHSS	--	N/A	--
§15.247(b)(3)	RSS-247 Clause 5.4(d)	Conducted output power for DTS	Appendix D	Pass	Site 1
§15.247(e)	RSS-247 Clause 5.2(b)	Power spectral density	Appendix E	Pass	Site 1
§15.247(a)(2)	RSS-247 Clause 5.2(a)	6dB bandwidth	Appendix B	Pass	Site 1
§15.247(a)(1)	RSS-247 Clause 5.1(a)	20dB Occupied bandwidth	--	N/A	--
--	RSS-GEN 6.7	99% Occupied Bandwidth	Appendix C	Pass	Site 1
§15.247(a)(1)	RSS-247 Clause 5.1(b)	Carrier frequency separation	--	N/A	--
§15.247(a)(1)(iii)	RSS-247 Clause 5.1(d)	Number of hopping frequencies	--	N/A	--
§15.247(a)(1)(iii)	RSS-247 Clause 5.1(d)	Dwell Time	--	N/A	--
§15.247(d) §15.205	RSS-247 Clause 5.5 RSS-GEN 8.10	Spurious RF conducted emissions	Appendix G Appendix H	Pass	Site 1
§15.247(d)	RSS-247 Clause 5.5	Band edge	Appendix F See page 30	Pass	Site 1
§15.247(d) & §15.209 & §15.205	RSS-247 Clause 5.5 & RSS-GEN 6.13 RSS-GEN 8.9 RSS-GEN 8.10	Spurious radiated emissions for transmitter	See page 23	Pass	Site 1
	RSS-GEN 8.11	Frequency stability	Appendix I	Pass	Site 1
§15.203	RSS-GEN 6.8	Antenna requirement	See note 1	Pass	--

Remark 1: N/A – Not Applicable.
Note 1: The EUT uses an internal antenna, the gain: 0dBi. According to §15.203, it is considered sufficiently to comply with the provisions of this section.

3 Technical Requirement

3.1 Conducted Emission

Test Method:
The test method was refered to the subclause 5.2 of ANSI C63.4-2014.

1. The EUT was placed on a table, which is 0.8m above ground plane
2. The power line of the EUT is connected to the AC mains through a Artificial Mains Network (A.M.N.).
3. Maximum procedure was performed to ensure EUT compliance
4. A EMI test receiver is used to test the emissions from both sides of AC line

Test Setup:

The mains cable of the EUT (per AC/DC Adapter) must be connected to LISN. The LISN shall be placed 0.8 m from the boundary of EUT and bonded to a ground reference plane for LISN mounted on top of the ground reference plane. This distance is between the closest points of the LISN and the EUT. All other units of the EUT and associated equipment shall be at least 0.8m from the LISN.
Ground connections, where required for safety purposes, shall be connected to the reference ground point of the LISN and, where not otherwise provided or specified by the manufacturer, shall be of same length as the mains cable and run parallel to the mains connection at a separation distance of not more than 0.1 m.

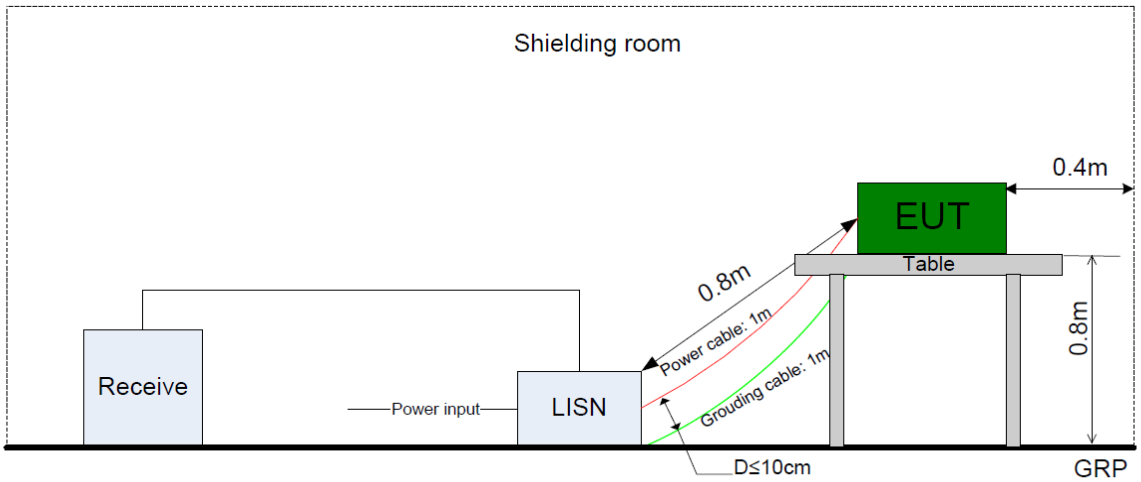

Limit:

Frequency MHz	QP Limit dBμV	AV Limit dBμV
0.150-0.500	66-56*	56-46*
0.500-5	56	46
5-30	60	50

Decreasing linear.

Test Result:

Test Specification: Power Line, Live

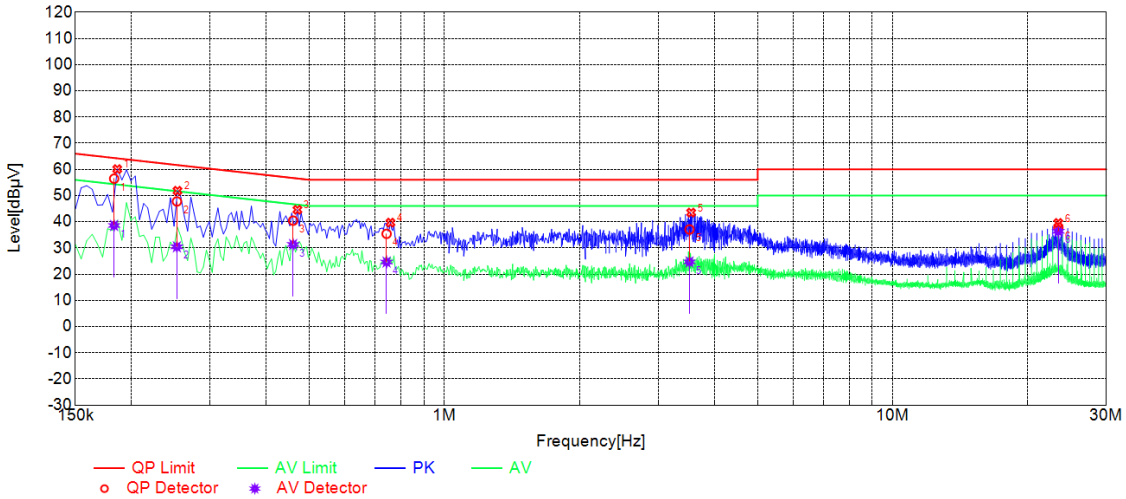

Suspected List							
NO.	Freq. [MHz]	Level [dBµV]	Factor [dB]	Limit [dBµV]	Margin [dB]	Detector	Verdict
1	0.1860	60.10	10.22	64.21	4.11	PK	PASS
2	0.2535	51.84	10.22	61.64	9.80	PK	PASS
3	0.4695	44.59	10.22	56.52	11.93	PK	PASS
4	0.7575	39.68	10.23	56.00	16.32	PK	PASS
5	3.5520	43.50	10.28	56.00	12.50	PK	PASS
6	23.4420	39.55	10.58	60.00	20.45	PK	PASS

Final Data List									
NO.	Freq. [MHz]	Factor [dB]	QP Value [dBµV]	QP Limit [dBµV]	QP Margin [dB]	AV Value [dBµV]	AV Limit [dBµV]	AV Margin [dB]	Verdict
1	0.1830	10.23	56.45	64.35	7.90	38.59	54.35	15.76	PASS
2	0.2527	10.22	47.78	61.67	13.89	30.44	51.67	21.23	PASS
3	0.4592	10.22	40.43	56.71	16.28	31.33	46.71	15.38	PASS
4	0.7424	10.23	35.40	56.00	20.60	24.62	46.00	21.38	PASS
5	3.5224	10.29	37.09	56.00	18.91	24.69	46.00	21.31	PASS
6	23.4454	10.58	37.80	60.00	22.20	36.39	50.00	13.61	PASS

Test Specification: Power Line, Neutral

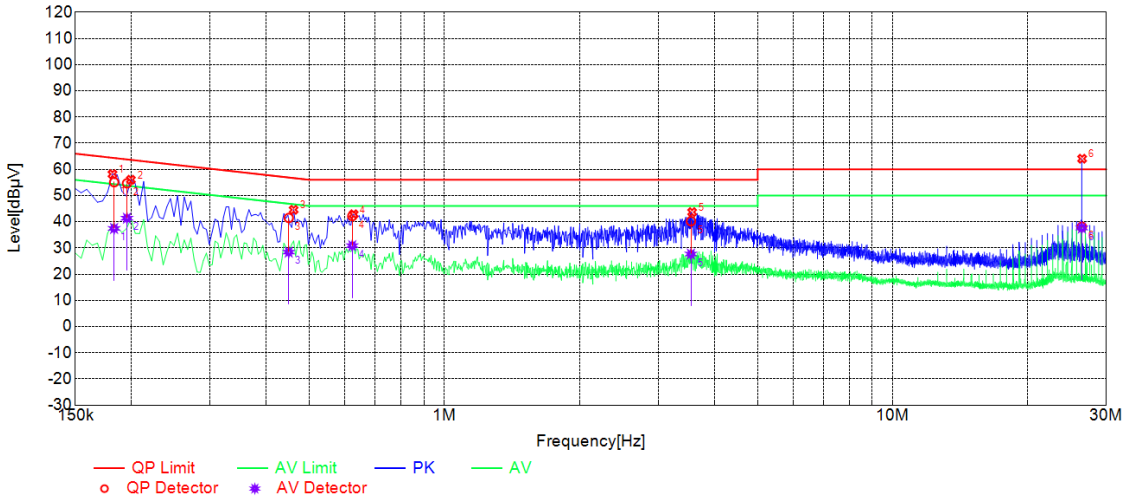

Suspected List							
NO.	Freq. [MHz]	Level [dBµV]	Factor [dB]	Limit [dBµV]	Margin [dB]	Detector	Verdict
1	0.1815	58.19	10.21	64.42	6.23	PK	PASS
2	0.1995	56.05	10.21	63.63	7.58	PK	PASS
3	0.4605	44.58	10.21	56.68	12.10	PK	PASS
4	0.6270	42.87	10.22	56.00	13.13	PK	PASS
5	3.5700	43.69	10.28	56.00	12.31	PK	PASS
6	26.4975	64.07	10.63	60.00	-4.07	PK	FAIL

Final Data List									
NO.	Freq. [MHz]	Factor [dB]	QP Value [dBµV]	QP Limit [dBµV]	QP Margin [dB]	AV Value [dBµV]	AV Limit [dBµV]	AV Margin [dB]	Verdict
1	0.1830	10.21	55.12	64.35	9.23	37.45	54.35	16.90	PASS
2	0.1955	10.21	54.68	63.80	9.12	41.36	53.80	12.44	PASS
3	0.4490	10.21	41.47	56.89	15.42	28.41	46.89	18.48	PASS
4	0.6224	10.22	42.19	56.00	13.81	30.89	46.00	15.11	PASS
5	3.5480	10.29	40.23	56.00	15.77	27.68	46.00	18.32	PASS
6	26.4534	10.63	38.11	60.00	21.89	37.62	50.00	12.38	PASS

3.2 Conducted Peak output power

Test Method

The test method was refered to the subclause 11.9.1.1 of ANSI C63.10-2013.

1. Connect EUT test port to spectrum analyzer.
2. Set the EUT to transmit maximum output power at 2.4GHz.
3. Then set the EUT to transmit at high, middle and low frequency and measure the conducted output power separately.
4. RBW=2MHz, VBW≥3RBW, Sweep = auto, Detector function = peak, Trace = max hold
5. Repeat above procedures until all frequencies measured were complete.

Test Setup:

The Bluetooth component's antenna ports(s) of the EUT are connected to the measurement instrument per an appropriate attenuator. The EUT is controlled by PC/software to emit the specified signals for the purpose of measurements.

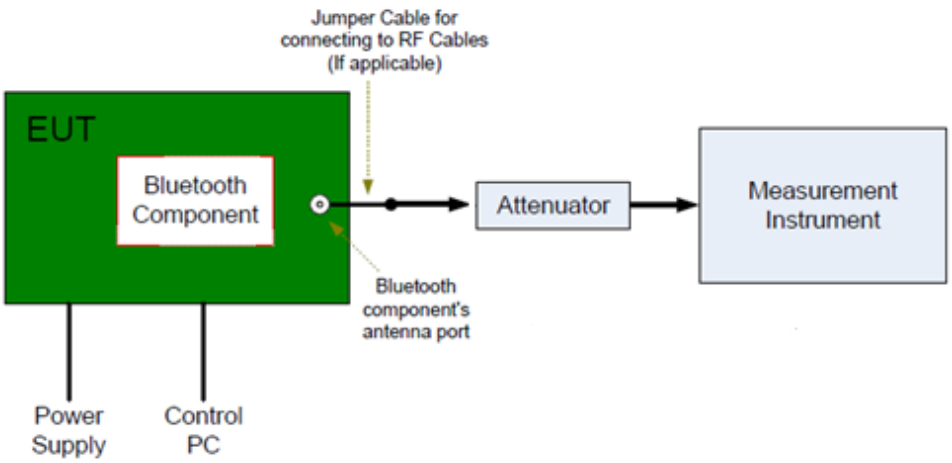

Limits:

According to §15.247 (b) (3)/RSS-247 5.4 (d), conducted output power limit as below:

Frequency Range MHz	Limit W	Limit dBm
2400-2483.5	≤1	≤30

According to RSS-247 5.4 (d), e.i.r.p limit as below:

Frequency Range MHz	Limit W	Limit dBm
2400-2483.5	≤4	≤36

Test Result: Pass

3.3 6dB bandwidth

Test Method:
The test method was refered to the subclause 11.8 of ANSI C63.10-2013.

1. Connect EUT test port to spectrum analyzer.
2. Set the EUT to transmit maximum output power at 2.4GHz.
3. Then set the EUT to transmit at high, middle and low frequency and measure the conducted output power separately.
4. RBW=100K, VBW≥3RBW, Sweep = auto, Detector function = peak, Trace = max hold
5. Use the automatic bandwidth measurement capability of an instrument, may be employed using the X dB bandwidth mode with X set to 6 dB, care shall be taken so that the bandwidth measurement is not influenced by any intermediate power nulls in the fundamental emission that might be ≥ 6 dB.
6. Allow the trace to stabilize, record the X dB Bandwidth value.

Test Setup:
The Bluetooth component's antenna ports(s) of the EUT are connected to the measurement instrument per an appropriate attenuator. The EUT is controlled by PC/software to emit the specified signals for the purpose of measurements.

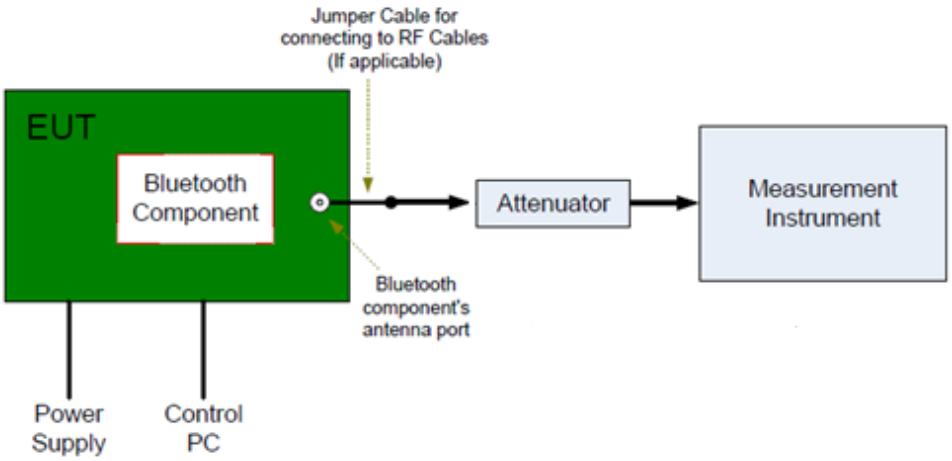

Limit:
According to §15.247(a)(2)/RSS-247 5.2 (a), 6dB bandwidth limit as below:

Limit [kHz]
≥500

Test Result: Pass

3.4 Frequency Stability

Test Method:
The test method was refered to the subclause 6.8.2 of ANSI C63.10-2013.

7. Connect EUT test port to spectrum analyzer.
8. Set the EUT to transmit maximum output power at 2.4GHz.
9. Then set the EUT to transmit at high, middle and low frequency and measure the conducted output power separately.
10. RBW=100K, VBW≥3RBW, Sweep = auto, Detector function = peak, Trace = max hold
11. Allow the trace to stabilize, record the frequency value.

Test Setup:
The Bluetooth component's antenna ports(s) of the EUT are connected to the measurement instrument per an appropriate attenuator. The EUT is controlled by PC/software to emit the specified signals for the purpose of measurements.

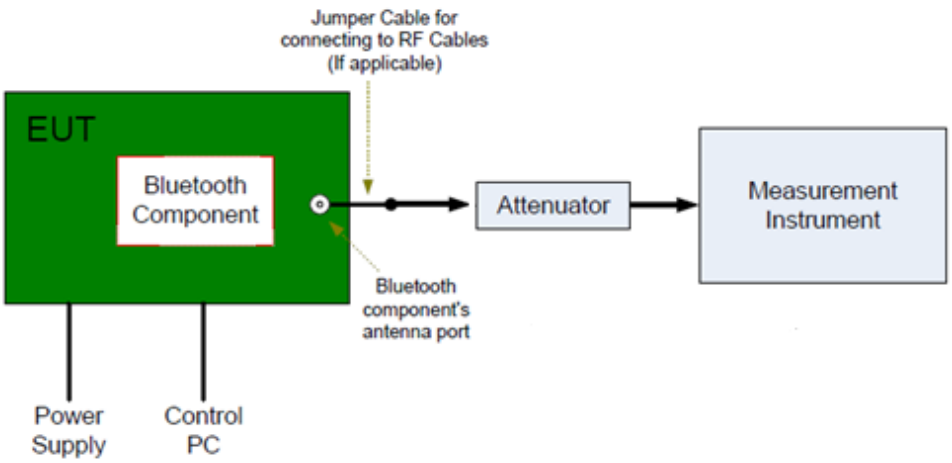

Limit:
According to RSS-GEN 8.11 limit as below:

the fundamental emissions of the radio apparatus should be kept within at least the central 80% of its permitted operating frequency band in order to minimize the possibility of out-of-band operation.

Test Result: Pass

3.5 99% bandwidth

Test Method:
The test method was refered to the subclause 6.9.3 of ANSI C63.10-2013.

1. Connect EUT test port to spectrum analyzer.
2. Set the EUT to transmit maximum output power at 2.4GHz.
3. Then set the EUT to transmit at high, middle and low frequency separately.
4. Set Span = approximately 1.5 to 5 times the 99% bandwidth.
5. Set RBW ≥ 1% to 5% of the 99% bandwidth, VBW ≥ RBW.
6. Set Sweep = auto.
7. Set Detector function = peak.
8. Allow the trace to stabilize.
9. Repeat above procedures until all frequencies measured were complete.

Test Setup:
The Bluetooth component's antenna ports(s) of the EUT are connected to the measurement instrument per an appropriate attenuator. The EUT is controlled by PC/software to emit the specified signals for the purpose of measurements.

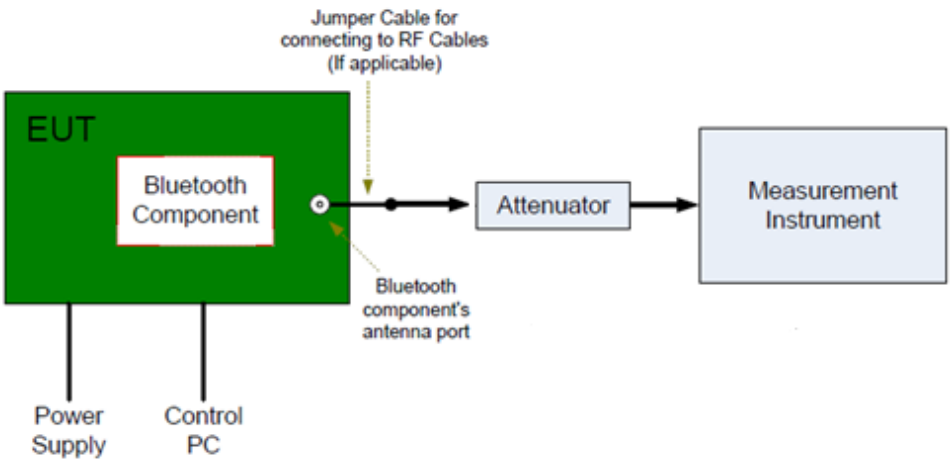

Limit:
According to RSS-GEN 6.7, no limit for 99% bandwidth:

Limit [kHz]
--

Test Result: Pass

3.6 Power spectral density

Test Method:
The test method was refered to the subclause 11.10 of ANSI C63.10-2013.

1. Connect EUT test port to spectrum analyzer.
2. Set the EUT to transmit maximum output power at 2.4GHz.
3. Then set the EUT to transmit at high, middle and low frequency separately.
4. Set analyzer center frequency to DTS channel center frequency.
5. Set the span to 1.5DTS bandwidth, set the RBW to: 3 kHz ≤ RBW ≤ 100 kHz, set the VBW ≥ 3RBW.
6. Detector = peak.
7. Sweep time = auto couple.
8. Trace mode = max hold.
9. Allow trace to fully stabilize.
10. Use the peak marker function to determine the maximum amplitude level within the RBW.
11. If measured value exceeds limit, reduce RBW (no less than 3 kHz) and repeat.

Test Setup:
The Bluetooth component's antenna ports(s) of the EUT are connected to the measurement instrument per an appropriate attenuator. The EUT is controlled by PC/software to emit the specified signals for the purpose of measurements.

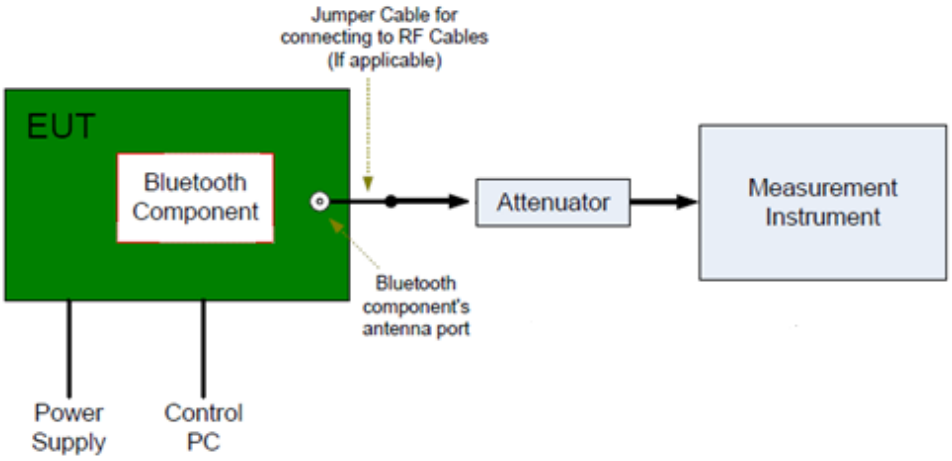

Limit:
According to §15.247(e)/RSS-247 5.2 (b), Power spectral density limit as below:

Limit [dBm]
≤8

Test Result: Pass

3.7 Spurious RF conducted emissions

Test Method:
The test method was refered to the subclause 11.11/11.12 of ANSI C63.10-2013.

1. Connect EUT test port to spectrum analyzer.
2. Set the EUT to transmit maximum output power at 2.4GHz.
3. Then set the EUT to transmit at high, middle and low frequency separately.
4. Set Span = wide enough to capture the peak level of the emission operating on the channel closest to the band edge, as well as any modulation products which fall outside of the authorized band of operation.
5. Set RBW = 100 kHz, VBW ≥ RBW.
6. Set Sweep = auto.
7. Set Detector function = peak.
8. Allow the trace to stabilize.
9. Repeat above procedures until all frequencies measured were complete.

Test Setup:
The Bluetooth component's antenna ports(s) of the EUT are connected to the measurement instrument per an appropriate attenuator. The EUT is controlled by PC/software to emit the specified signals for the purpose of measurements.

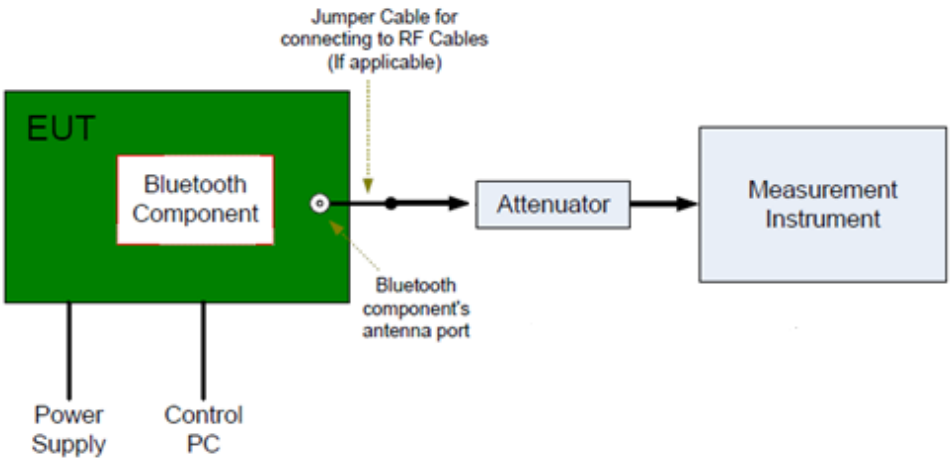

Limit:
According to §15.247(d) & §15.209 & §15.205, RSS-247 Clause 5.5 & RSS-GEN 6.13, RSS-GEN 8.9, RSS-GEN 8.10, Spurious RF conducted emissions limit as below:

Frequency Range MHz	L edimit (dBc)
30-25000	-20

Test Result: Pass

3.8 Band edge

Test Method:
The test method was refered to the subclause 11.13.3.4 of ANSI C63.10-2013.

1. Connect EUT test port to spectrum analyzer.
2. Set the EUT to transmit maximum output power at 2.4GHz.
3. Then set the EUT to transmit at high, middle and low frequency separately.
4. Set Span = wide enough to capture the peak level of the emission operating on the channel closest to the band edge, as well as any modulation products which fall outside of the authorized band of operation.
5. Set RBW ≥ 1% of the span, VBW ≥ RBW.
6. Set Sweep = auto.
7. Set Detector function = peak.
8. Allow the trace to stabilize.
9. Repeat above procedures until all frequencies measured were complete.

Test Setup:
The Bluetooth component's antenna ports(s) of the EUT are connected to the measurement instrument per an appropriate attenuator. The EUT is controlled by PC/software to emit the specified signals for the purpose of measurements.

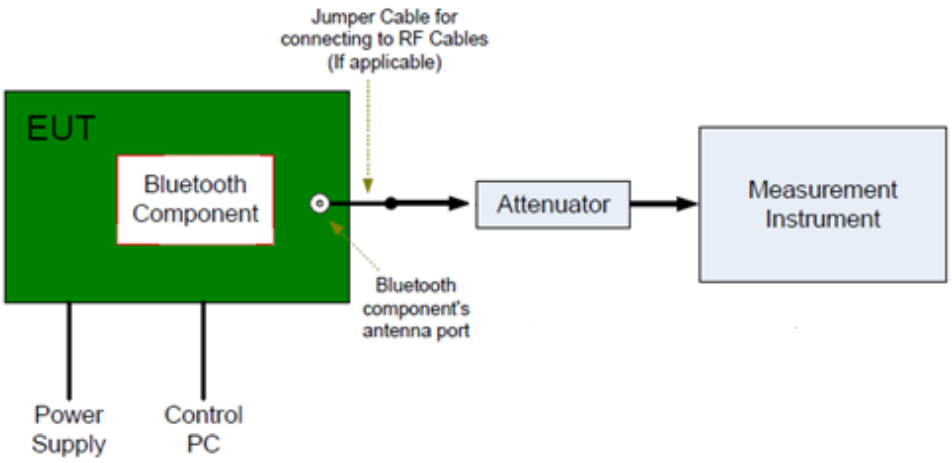

Limit:
According to RSS-247 5.5, In any 100kHz bandwidth outside the frequency band in which the spread spectrum or digitally modulated device is operating, the RF power that is produced shall be at least 20 dB below that in the100 kHz bandwidth within the band that contains the highest level of the desired power, based on either an RF conducted or a radiated measurement, provided that the transmitter demonstrates compliance with the peak conducted power limits.

Test Result: Pass

3.9 Spurious radiated emissions for transmitter

Test Method:

The test method was refered to the subclause 11.11/11.12 of ANSI C63.10-2013.

1: The EUT was place on a turn table which is 1.5m above ground plane for above 1GHz and 0.8m above ground for below 1GHz at 3 meter chamber room for test. The table was rotated 360 degrees to determine the position of the highest radiation.

2: The EUT was set 3 meters away from the interference – receiving antenna, which was mounted on the top of a variable – height antenna tower.

3: The height of antenna is varied from one meter to four meters above the ground to determine the maximum value of the field strength. Both horizontal and vertical polarizations of the antenna are set to make the measurement.

4: For each suspected emission, the EUT was arranged to its worst case and then the antenna was tuned to heights from 1 meter to 4 meters and the rotatable table was turned from 0 degrees to 360 degrees to find the maximum reading.

5: Use the following spectrum analyzer settings According to C63.10:

For Above 1GHz

Span = wide enough to capture the peak level of the in-band emission and all spurious
RBW = 1MHz, VBW≥RBW for peak measurement and VBW = 10Hz for average measurement, Sweep = auto, Detector function = peak, Trace = max hold.

For Below 1GHz

Use the following spectrum analyzer settings:

Span = wide enough to capture the peak level of the in-band emission and all spurious
RBW = 100 KHz, VBW≥RBW for peak measurement, Sweep = auto, Detector function = peak, Trace = max hold.

For Below 30MHz

Use the following spectrum analyzer settings:

Span = wide enough to capture the peak level of the in-band emission and all spurious
RBW = 200 Hz, VBW≥RBW from 9KHz to 0.15MHz, RBW 9KHz VBW≥RBW from 0.15MHz to 30MHz for peak measurement, Sweep = auto, Detector function = peak, Trace = max hold.

Note:

1: The resolution bandwidth and video bandwidth of test receiver/spectrum analyzer is 120 KHz for Quasi-peak detection (QP) at frequency below 1GHz.

2: The resolution bandwidth of test receiver/spectrum analyzer is 1MHz and the video bandwidth is 3MHz for peak detection (PK) at frequency above 1GHz.

3: The resolution bandwidth of test receiver/spectrum analyzer is 1MHz and the video bandwidth is 3MHz for RMS Average ((duty cycle < 98%) for Average detection (AV) at frequency above 1GHz, then the measurement results was added to a correction factor (20log(1/duty cycle)).

4: The resolution bandwidth of test receiver/spectrum analyzer is 1MHz and the video bandwidth is 10Hz (duty cycle > 98%) for Average detection (AV) at frequency above 1GHz.

5: When duty cycle <98%, The resolution bandwidth of test receiver/spectrum analyzer is 1MHz and the video bandwidth is VBW ≥ 1 / T, the T is transmission duration (T).

Test Setup:

Test Setup 1: Radiated Emission test below 30MHz

The test site semi-anechoic chamber has met the requirement of NSA tolerance 4 dB according to the standards: ANSI C63.4. The test distance is 3m. The setup is according to ANSI C63.4.

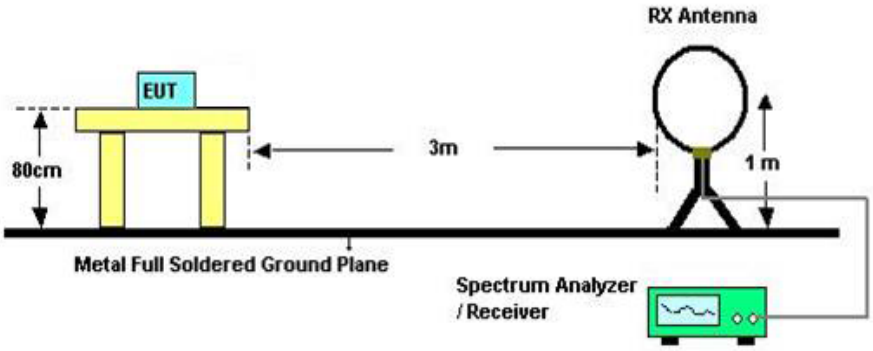

Test Setup 2: Radiated Emission test below 1GHz
The test site semi-anechoic chamber has met the requirement of NSA tolerance 4 dB according to the standards: ANSI C63.4. The test distance is 3m. The setup is according to ANSI C63.4.

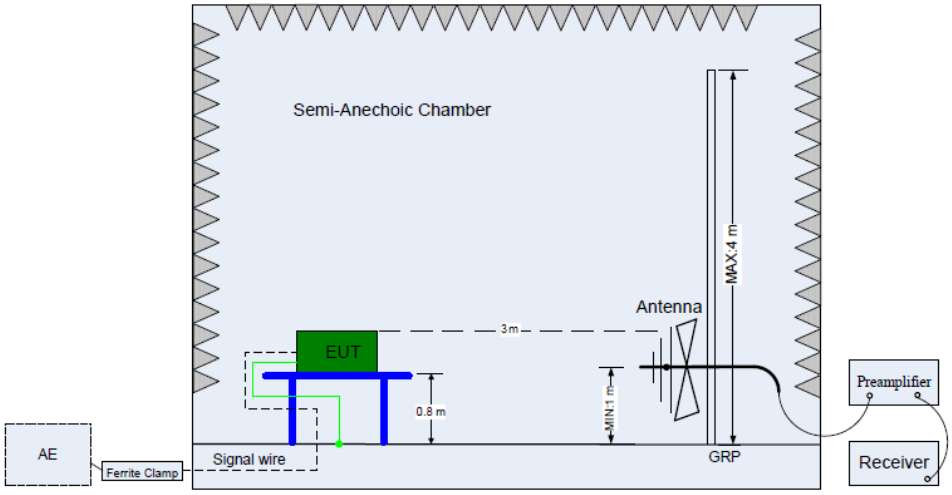

(Below 1 GHz)

Test Setup 3: Radiated Emission test above 1GHz
The test site semi-anechoic chamber has met the requirement of NSA tolerance 4 dB according to the standards: ANSI C63.4. The test distance is 3m. The setup is according to ANSI C63.4.

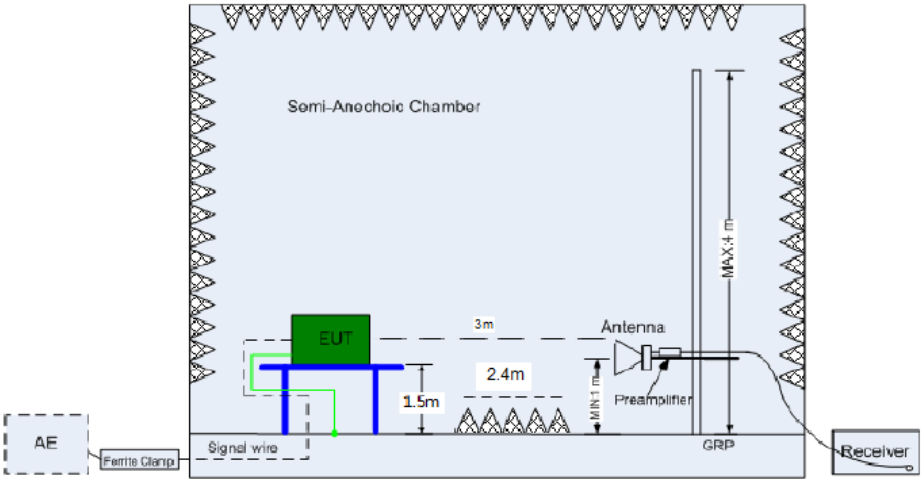

(Above 1 GHz)

Limit:
Radiated emissions which fall in the restricted bands, as defined in section15.205, must comply with the radiated emission limits specified in section 15.209.

§ 15.209/ RSS-GEN 8.9

Frequency MHz	Field Strength uV/m	Field Strength dBµV/m	Detector
30-88	100	40	QP
88-216	150	43.5	QP
216-960	200	46	QP
960-1000	500	54	QP
Above 1000	500	54	AV
Above 1000	5000	74	PK

§15.205 Restricted bands of operation

MHz	MHz	MHz	GHz
0.090-0.110	16.42-16.423	399.9-410	4.5-5.15
[1]0.495-0.505	16.69475-16.69525	608-614	5.35-5.46
2.1735-2.1905	16.80425-16.80475	960-1240	7.25-7.75
4.125-4.128	25.5-25.67	1300-1427	8.025-8.5
4.17725-4.17775	37.5-38.25	1435-1626.5	9.0-9.2
4.20725-4.20775	73-74.6	1645.5-1646.5	9.3-9.5
6.215-6.218	74.8-75.2	1660-1710	10.6-12.7
6.26775-6.26825	108-121.94	1718.8-1722.2	13.25-13.4
6.31175-6.31225	123-138	2200-2300	14.47-14.5
8.291-8.294	149.9-150.05	2310-2390	15.35-16.2
8.362-8.366	156.52475-156.52525	2483.5-2500	17.7-21.4
8.37625-8.38675	156.7-156.9	2690-2900	22.01-23.12
8.41425-8.41475	162.0125-167.17	3260-3267	23.6-24.0
12.29-12.293	167.72-173.2	3332-3339	31.2-31.8
12.51975-12.52025	240-285	3345.8-3358	36.43-36.5
12.57675-12.57725	322-335.4	3600-4400	([2])
13.36-13.41			

RSS-GEN 8.10

MHz	MHz	MHz	GHz
0.090 - 0.110	16.42 - 16.423	1660 - 1710	9.0 - 9.2
0.495 - 0.505	16.69475 - 16.69525	1718.8 - 1722.2	9.3 - 9.5
2.1735 - 2.1905	25.5 - 25.67	2200 - 2300	10.6 - 12.7
3.020 - 3.026	37.5 - 38.25	2310 - 2390	13.25 - 13.4
4.125 - 4.128	73 - 74.6	2483.5 - 2500	14.47 - 14.5
4.17725 - 4.17775	74.8 - 75.2	2655 - 2900	15.35 - 16.2
.20725 - 4.20775	108 – 138	3260 – 3267	17.7 - 21.4
5.677 - 5.683	149.9 - 150.05	3332 - 3339	22.01 - 23.12
6.215 - 6.218	156.52475 - 156.52525	3345.8 - 3358	23.6 - 24.0
6.26775 - 6.26825	156.7 - 156.9	3500 - 4400	31.2 - 31.8
6.31175 - 6.31225	162.0125 - 167.17	4500 - 5150	36.43 - 36.5
8.291 - 8.294	167.72 - 173.2	5350 - 5460	Above 38.6
8.362 - 8.366	240 – 285	7250 - 7750	
8.37625 - 8.38675	322 - 335.4	8025 – 8500	
8.41425 - 8.41475	399.9 - 410		
12.29 - 12.293	608 - 614		
12.51975 - 12.52025	960 - 1427		
12.57675 - 12.57725	1435 - 1626.5		
13.36 - 13.41	1645.5 - 1646.5		

Test Result: Pass

Spurious radiated emissions (Radiated) for Below 1GHz.
Note: The low frequency, which started from 9 kHz to 30MHz, was pre-scanned and the result which was 20dB lower than the limit line per 15.31(o) was not reported.

TX 2402MHz
Specification:Horizontal

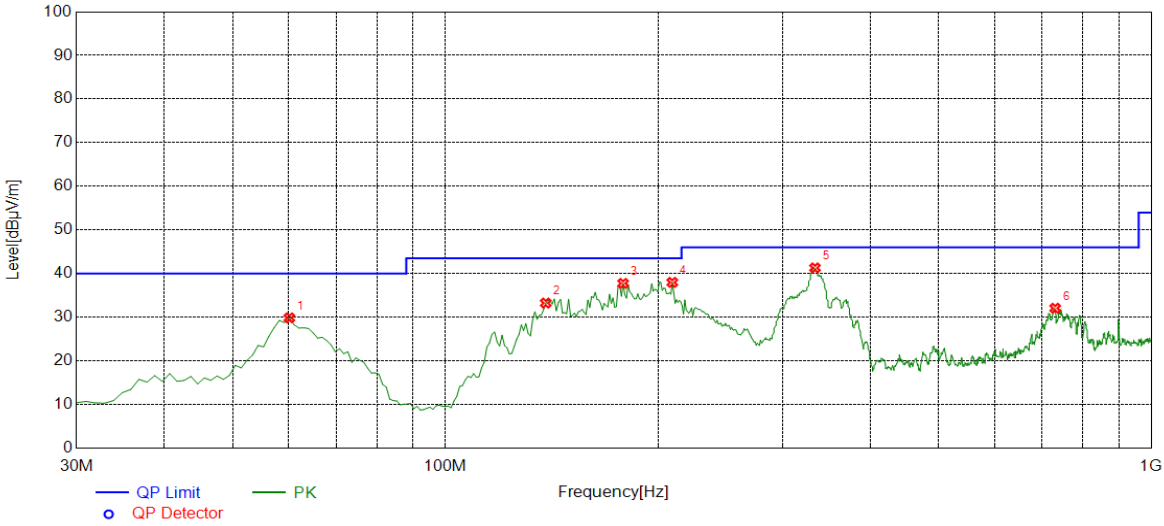

Freq. [MHz]	QP Level [dBµV/m]	Factor [dB]	QP Limit [dBµV/m]	Margin [dB]	Height [cm]	Angle [°]	Polarity
60.1001	29.87	-16.50	40.00	10.13	100	298	Horizontal
138.748	33.26	-15.64	43.50	10.24	100	118	Horizontal
178.558	37.77	-16.49	43.50	5.73	100	354	Horizontal
209.629	38.00	-18.21	43.50	5.50	100	118	Horizontal
333.913	41.32	-15.02	46.00	4.68	100	163	Horizontal
731.041	32.07	-7.67	46.00	13.93	100	16	Horizontal

Remark:

(1) Below 1GHz: Corrector factor = Antenna Factor + Cable Loss - Amplifier Gain.
(2) Data of measurement within this frequency range shown "--" in the table above means the reading of emissions are the noise floor or attenuated more than 20dB below the permissible limits or the field strength is too small to be measured.

TX 2402MHz
Specification:Vertical

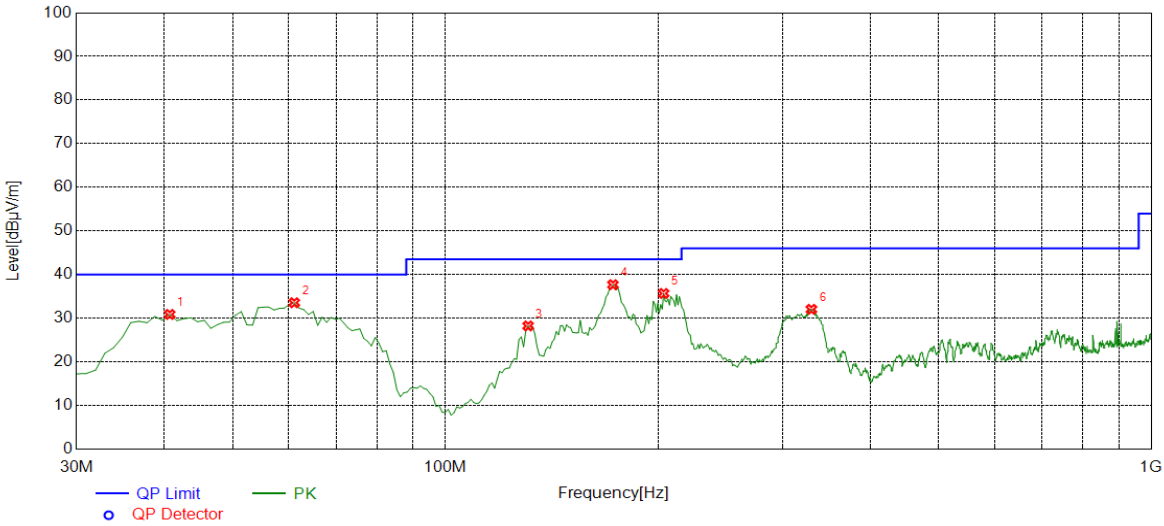

Freq. [MHz]	QP Level [dBµV/m]	Factor [dB]	QP Limit [dBµV/m]	Margin [dB]	Height [cm]	Angle [°]	Polarity
40.6807	30.88	-16.36	40.00	9.12	100	329	Vertical
61.0711	33.56	-16.74	40.00	6.44	100	249	Vertical
130.981	28.25	-16.60	43.50	15.25	100	344	Vertical
172.732	37.70	-15.69	43.50	5.80	100	83	Vertical
203.803	35.69	-18.37	43.50	7.81	100	78	Vertical
330.030	32.05	-15.05	46.00	13.95	100	327	Vertical

Remark:

(1) Below 1GHz: Corrector factor = Antenna Factor + Cable Loss - Amplifier Gain.
(2) Data of measurement within this frequency range shown "--" in the table above means the reading of emissions are the noise floor or attenuated more than 20dB below the permissible limits or the field strength is too small to be measured.

TX 2440MHz
Specification:Horizontal

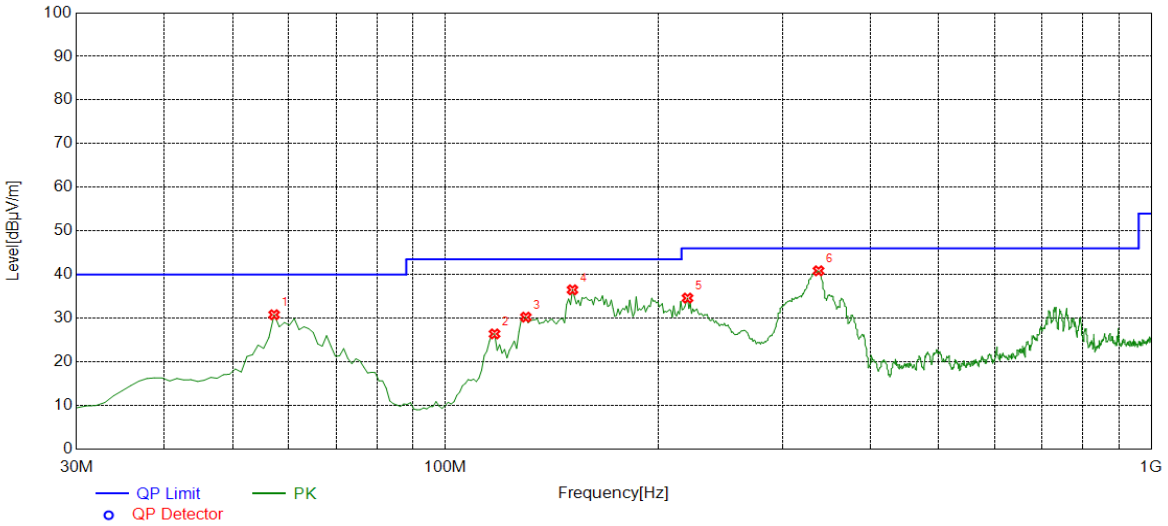

Freq. [MHz]	QP Level [dBµV/m]	Factor [dB]	QP Limit [dBµV/m]	Margin [dB]	Height [cm]	Angle [°]	Polarity
57.1872	30.81	-16.37	40.00	9.19	100	278	Horizontal
117.387	26.42	-18.54	43.50	17.08	100	123	Horizontal
130.010	30.26	-16.72	43.50	13.24	100	114	Horizontal
151.371	36.52	-14.90	43.50	6.98	100	289	Horizontal
220.310	34.62	-17.90	46.00	11.38	100	325	Horizontal
337.797	40.88	-14.99	46.00	5.12	100	162	Horizontal

Remark:

(1) Below 1GHz: Corrector factor = Antenna Factor + Cable Loss - Amplifier Gain.
(2) Data of measurement within this frequency range shown "--" in the table above means the reading of emissions are the noise floor or attenuated more than 20dB below the permissible limits or the field strength is too small to be measured.

TX 2440MHz
Specification:Vertical

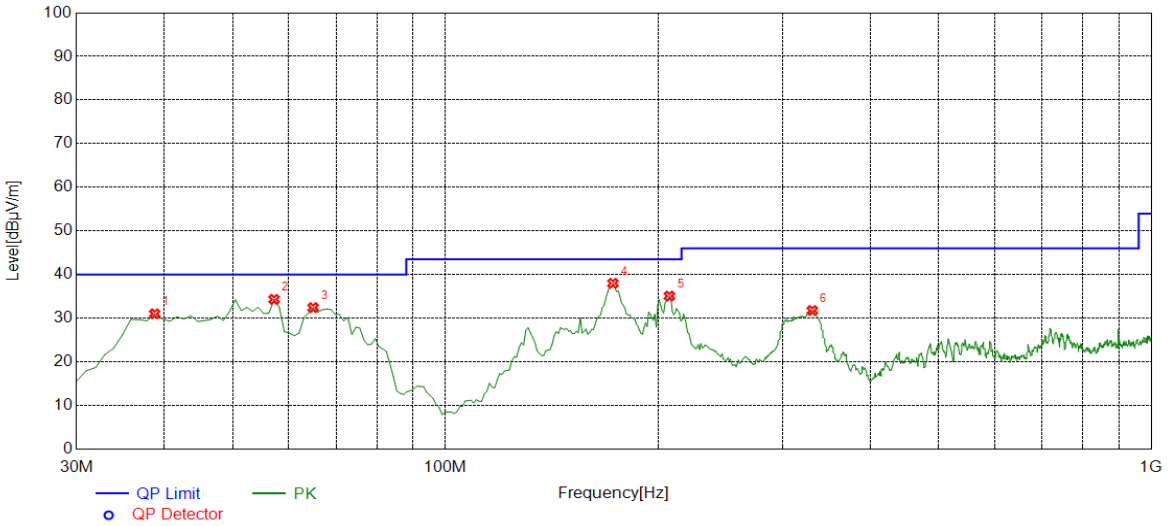

Freq. [MHz]	QP Level [dBµV/m]	Factor [dB]	QP Limit [dBµV/m]	Margin [dB]	Height [cm]	Angle [°]	Polarity
38.7387	31.02	-16.63	40.00	8.98	100	40	Vertical
57.1872	34.33	-16.37	40.00	5.67	100	214	Vertical
64.9550	32.45	-17.74	40.00	7.55	100	206	Vertical
172.732	38.02	-15.69	43.50	5.48	100	103	Vertical
207.687	35.10	-18.26	43.50	8.40	100	82	Vertical
331.001	31.78	-15.04	46.00	14.22	100	332	Vertical

Remark:

(1) Below 1GHz: Corrector factor = Antenna Factor + Cable Loss - Amplifier Gain.
(2) Data of measurement within this frequency range shown "--" in the table above means the reading of emissions are the noise floor or attenuated more than 20dB below the permissible limits or the field strength is too small to be measured.

TX 2480MHz
Specification:Horizontal

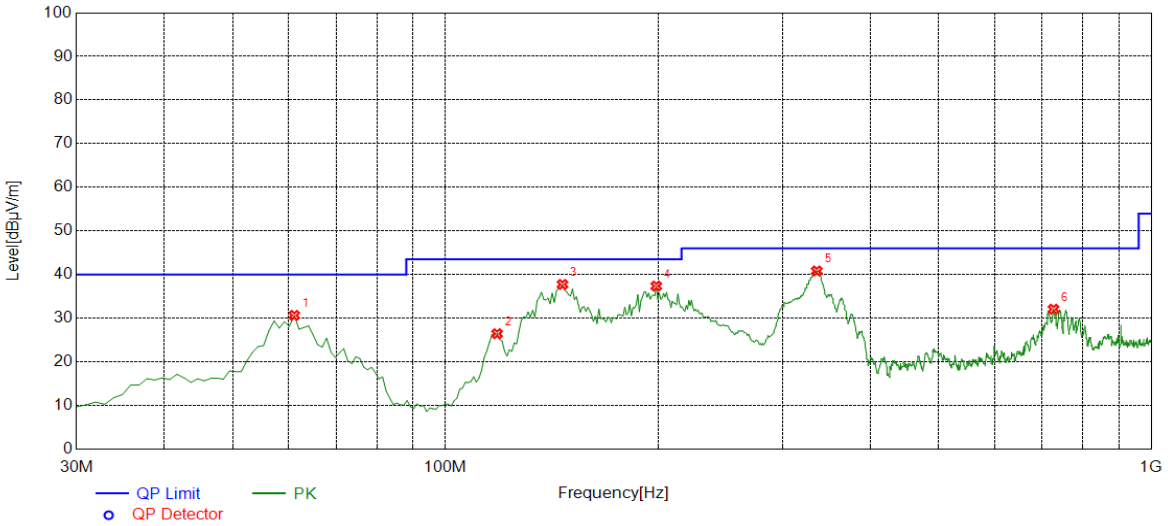

Freq. [MHz]	QP Level [dBµV/m]	Factor [dB]	QP Limit [dBµV/m]	Margin [dB]	Height [cm]	Angle [°]	Polarity
61.0711	30.67	-16.74	40.00	9.33	100	272	Horizontal
118.358	26.47	-18.44	43.50	17.03	100	124	Horizontal
146.516	37.76	-15.07	43.50	5.74	100	90	Horizontal
198.948	37.39	-18.35	43.50	6.11	100	134	Horizontal
335.855	40.84	-15.00	46.00	5.16	100	162	Horizontal
727.157	32.09	-7.71	46.00	13.91	100	16	Horizontal

Remark:

(1) Below 1GHz: Corrector factor = Antenna Factor + Cable Loss - Amplifier Gain.
(2) Data of measurement within this frequency range shown "--" in the table above means the reading of emissions are the noise floor or attenuated more than 20dB below the permissible limits or the field strength is too small to be measured.

TX 2480MHz
Specification:Vertical

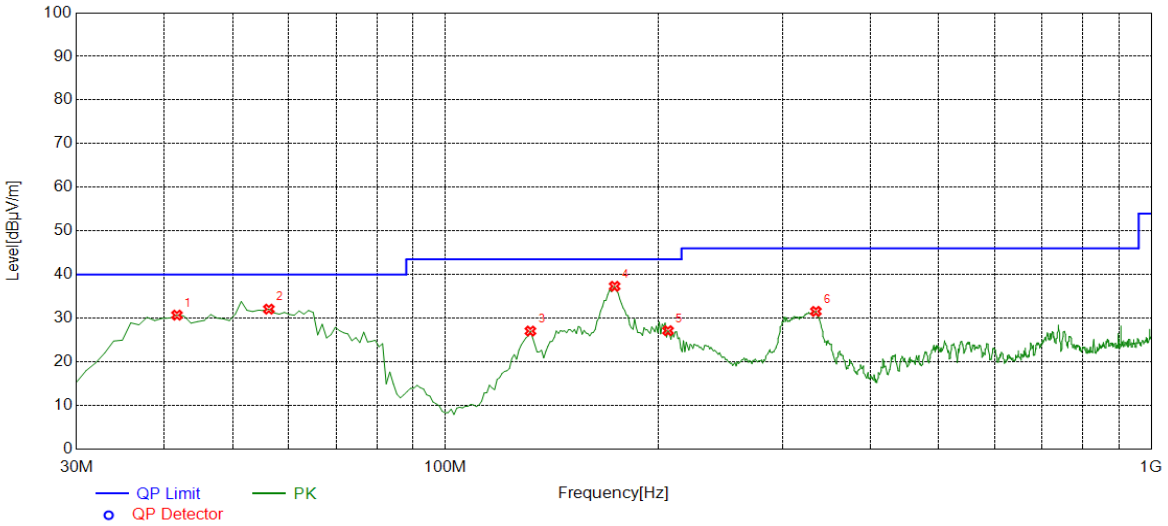

Freq. [MHz]	QP Level [dBµV/m]	Factor [dB]	QP Limit [dBµV/m]	Margin [dB]	Height [cm]	Angle [°]	Polarity
41.6517	30.72	-16.34	40.00	9.28	100	123	Vertical
56.2162	32.10	-16.34	40.00	7.90	100	181	Vertical
131.952	27.07	-16.48	43.50	16.43	100	344	Vertical
173.703	37.33	-15.83	43.50	6.17	100	120	Vertical
206.716	27.15	-18.29	43.50	16.35	100	73	Vertical
334.884	31.58	-15.01	46.00	14.42	100	324	Vertical

Remark:

(1) Below 1GHz: Corrector factor = Antenna Factor + Cable Loss - Amplifier Gain.
(2) Data of measurement within this frequency range shown "--" in the table above means the reading of emissions are the noise floor or attenuated more than 20dB below the permissible limits or the field strength is too small to be measured.

According to C63.10, if the peak (or quasi-peak) measured value complies with the average limit, it is unnecessary to perform an average measurement, so AV emission value did not show in below table if the peak value complies with average limit.

GFSK Modulation 2402MHz Test Result

Frequency Band	Frequency	Emission Level	Polarization	Limit	Detector	Margin	Corr.	Result
	MHz	dBuV/m		dBμV/m		dB	(dB)	
1000-25000MHz	4800.90	55.81	H	74.00	PK	18.19	-14.79	Pass
	4800.90	48.50	H	54.00	AV	5.50	-14.79	Pass
	7202.10	59.74	V	74.00	PK	14.26	-12.03	Pass
	7202.10	52.45	V	54.00	AV	1.55	-12.03	Pass

GFSK Modulation 2441MHz Test Result

Frequency Band	Frequency	Emission Level	Polarization	Limit	Detector	Margin	Corr.	Result
	MHz	dBuV/m		dBμV/m		dB	(dB)	
1000-25000MHz	7322.16	54.82	H	74.00	PK	19.18	-11.65	Pass
	7322.16	46.15	H	54.00	AV	7.85	-11.65	Pass
	7322.16	58.99	V	74.00	PK	15.01	-11.65	Pass
	7322.16	51.31	V	54.00	AV	2.69	-11.65	Pass

GFSK Modulation 2480MHz Test Result

Frequency Band	Frequency	Emission Level	Polarization	Limit	Detector	Margin	Corr.	Result
	MHz	dBuV/m		dBμV/m		dB	(dB)	
1000-25000MHz	4958.47	54.15	H	74.00	PK	19.85	-14.58	Pass
	4958.47	50.79	H	54.00	AV	3.21	-14.58	Pass
	7442.22	56.62	V	74.00	PK	17.38	-11.26	Pass
	7442.22	50.42	V	54.00	AV	3.58	-11.26	Pass

Remark:

(1) "*" means the emission(s) appear within the restrict bands shall follow the requirement of section 15.205.

(2) Data of measurement within this frequency range shown "--" in the table above means the reading of emissions are the noise floor or attenuated more than 20dB below the permissible limits or the field strength is too small to be measured.

(3) Above 1GHz: Corrector factor = Antenna Factor + Cable Loss - Amplifier Gain.

Band Edge (Radiated)

GFSK Modulation 2402MHz Test Result

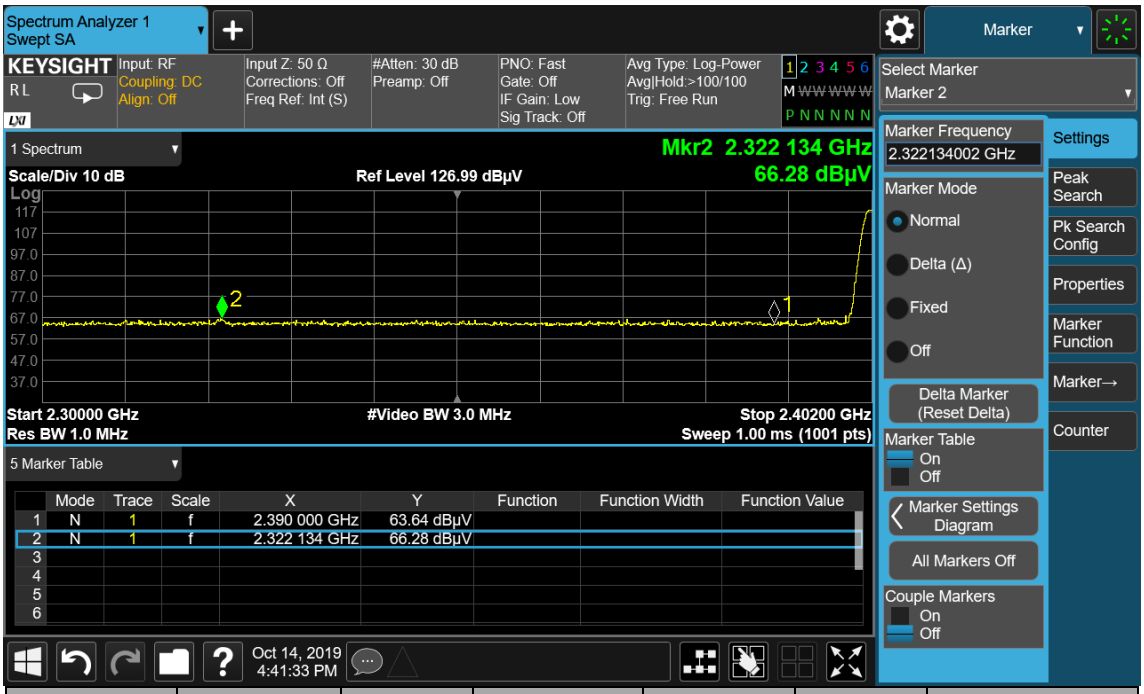

Freq. [MHz]	PK Level [dBµV/m]	Factor [dB]	PK Limit [dBµV/m]	Margin [dB]	Height [cm]	Polarity
2390.0	41.05	-22.59	74.00	32.95	150	Horizontal
2322.134	43.69	-22.59	74.00	30.31	150	Horizontal

PK level= Read level + Factor
Factor= Antenna Factor + Cable loss – Preamp Factor

GFSK Modulation 2402MHz Test Result

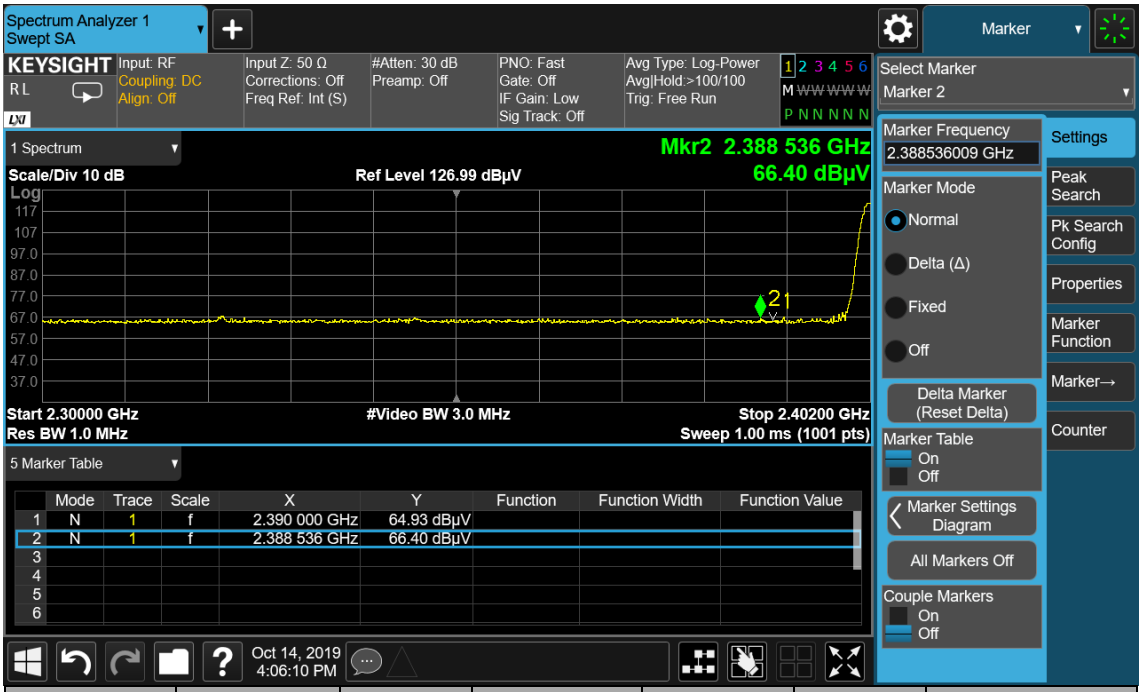

Freq. [MHz]	PK Level [dBµV/m]	Factor [dB]	PK Limit [dBµV/m]	Margin [dB]	Height [cm]	Polarity
2390.0	42.34	-22.59	74.00	31.66	150	Horizontal
2322.134	43.81	-22.59	74.00	30.19	150	Horizontal

PK level= Read level + Factor
Factor= Antenna Factor + Cable loss – Preamp Factor

GFSK Modulation 2480MHz Test Result

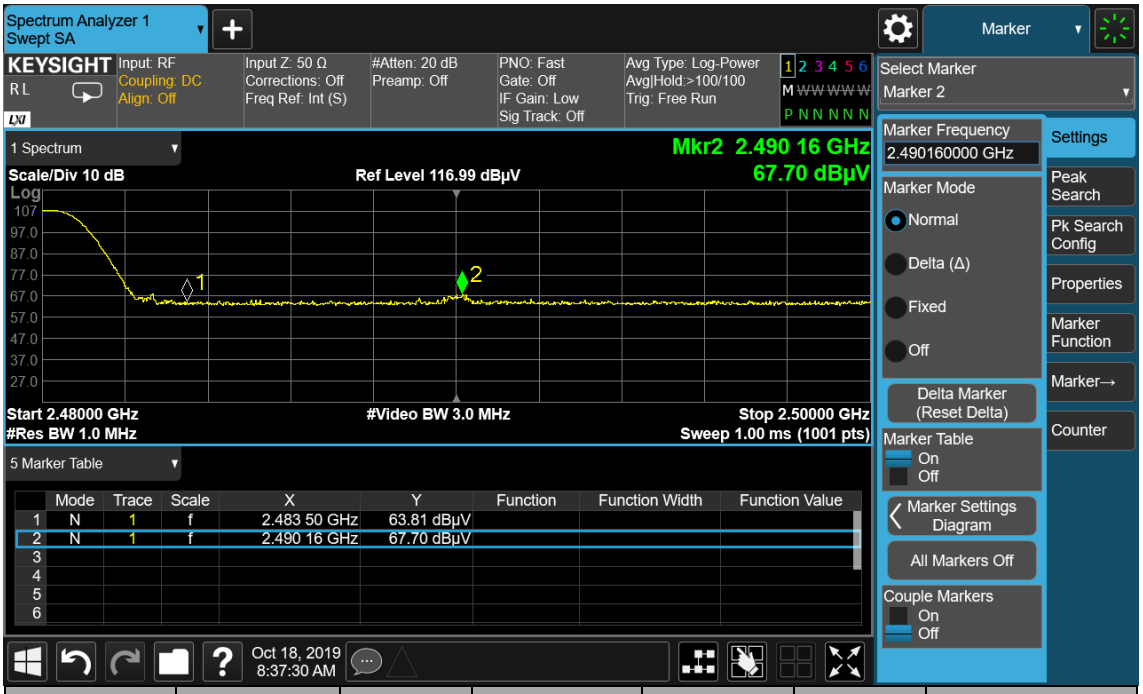

Freq. [MHz]	PK Level [dBµV/m]	Factor [dB]	PK Limit [dBµV/m]	Margin [dB]	Height [cm]	Polarity
2483.50	41.22	-22.59	74.00	32.78	150	Horizontal
2489.98	45.11	-22.59	74.00	28.89	150	Horizontal

PK level= Read level + Factor
Factor= Antenna Factor + Cable loss – Preamp Factor

GFSK Modulation 2480MHz Test Result

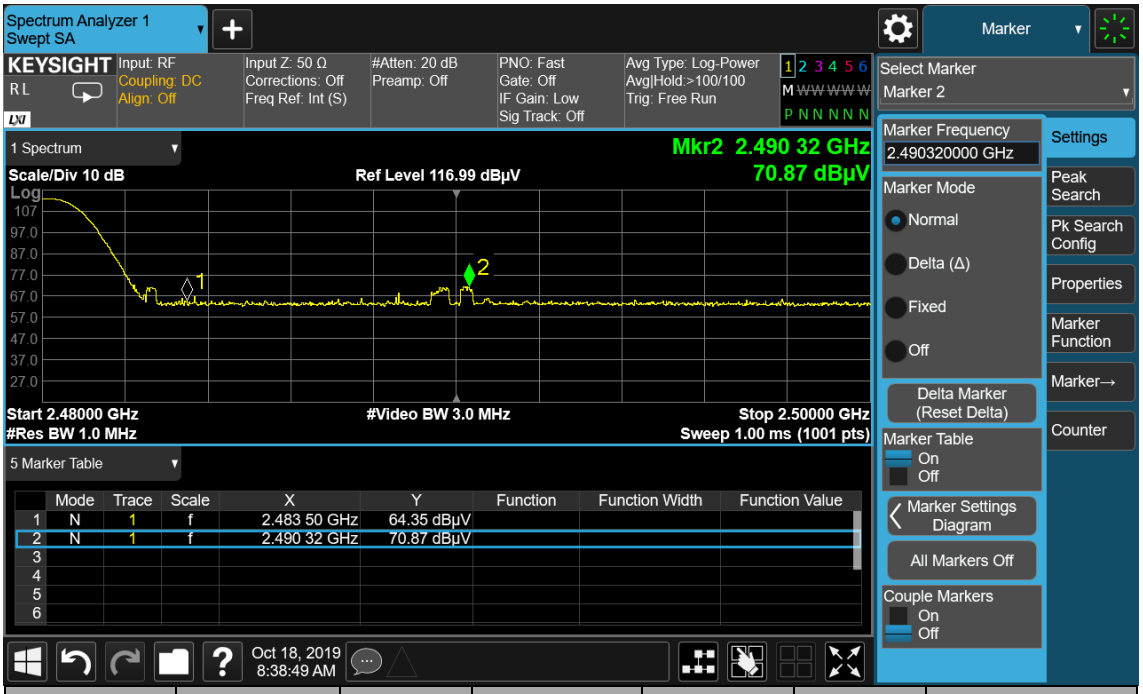

Freq. [MHz]	PK Level [dBµV/m]	Factor [dB]	PK Limit [dBµV/m]	Margin [dB]	Height [cm]	Polarity
2483.50	41.76	-22.59	74.00	32.24	150	Vertical
2489.98	48.28	-22.59	74.00	25.72	150	Vertical

PK level= Read level + Factor
Factor= Antenna Factor + Cable loss – Preamp Factor