Wireless Bluetooth Optical Transmitter and Receiver

FCC ID:2AQUATM-01

Model:TM-01

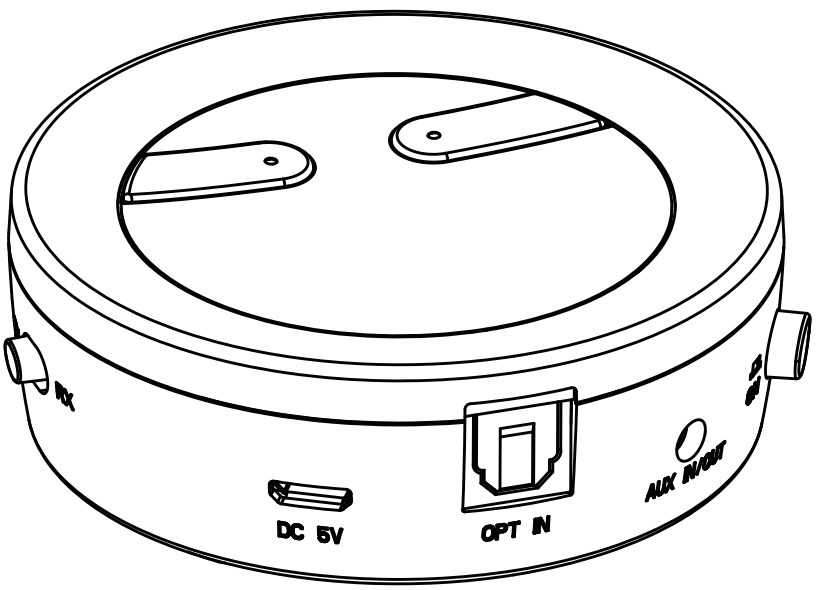

User Manual

RoHS
Made in China

Product Overview & Status Indicators

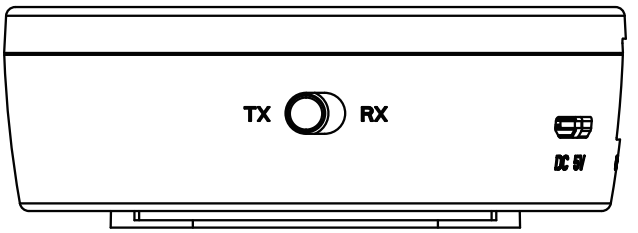

Transmitter(TX) / Receiver(RX) Mode Switch

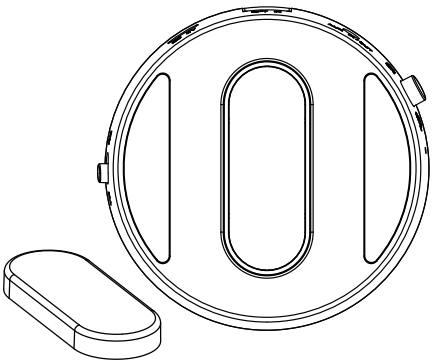

Magnetic Wall Mount Base

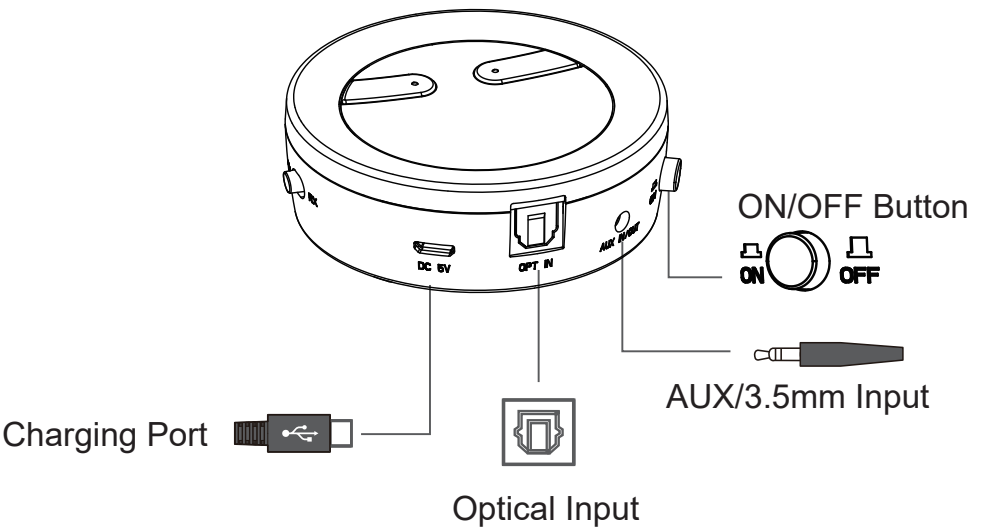

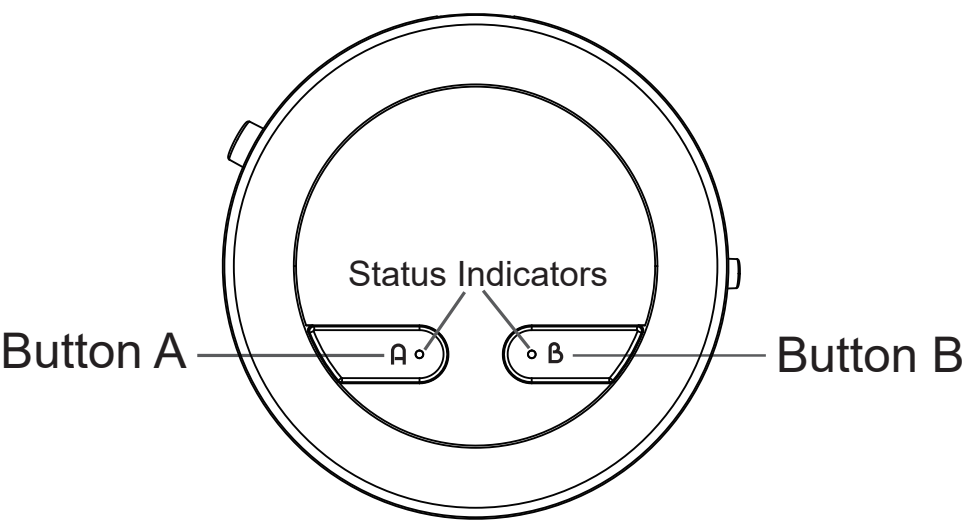

INDICATOR STATUS

Power on - Flashes GREEN once per 2s
Pairing - Flashes RED and BLUE alternately
Connected - Steady BLUE

Audio Connection Options

When used with TV:

Check your TVs output options before the set up

	Optical OUT	AUX/3.5mm	RCA jacks labeled "AUDIO OUT"	Other RCA jacks (usually audio IN)	Big Phone Jack
Jack Options	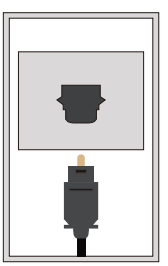	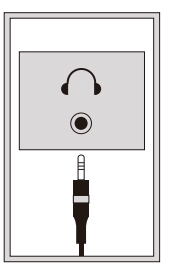	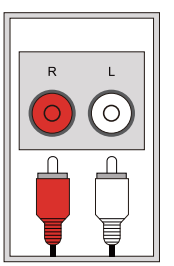	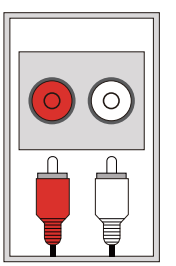	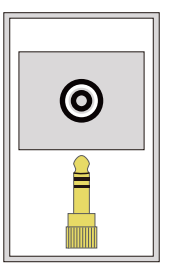
Natively Supported?	✓	✓	✓	✗	✓✗

1)Confirm the TV audio output is functional by plugging in a pair of wired headphones/earbuds.
2)Ensure your TV audio is set to “External Speaker”.

Note: To achieve low latency (<40ms delay), your receiving devices (headphones / speakers) must also support apt-X Low Latency, otherwise you will experience the lag between sound and picture.

OPTION 1 - OPTICAL

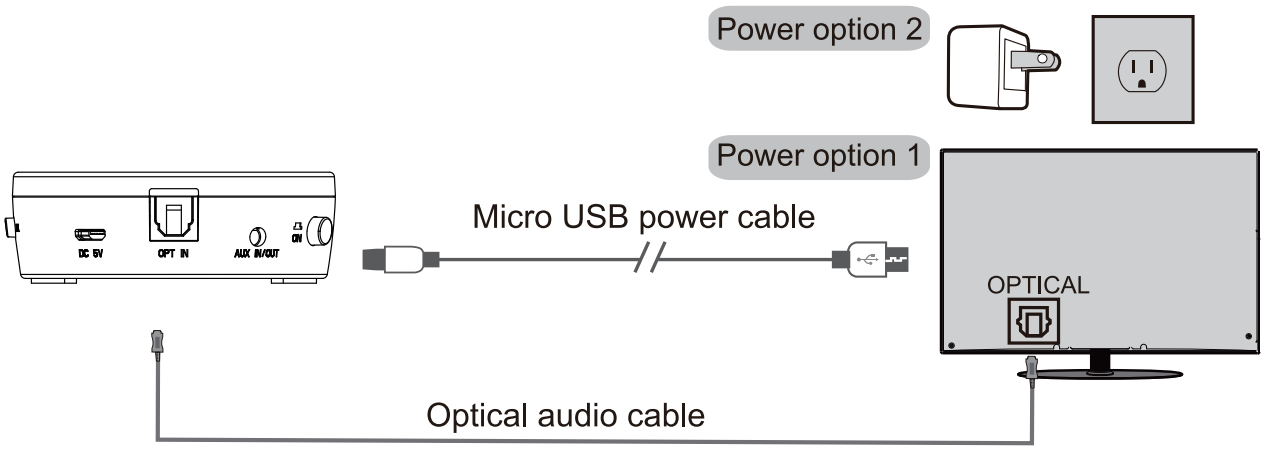

Notes:

1.Make sure your TV audio is set to PCM format as the TM-01 does not support Dolby/DTS.
2.When using the OPTICAL output please unplug any devices from the 3.5mm AUX jack.

OPTION 2 - 3.5mm/AUX

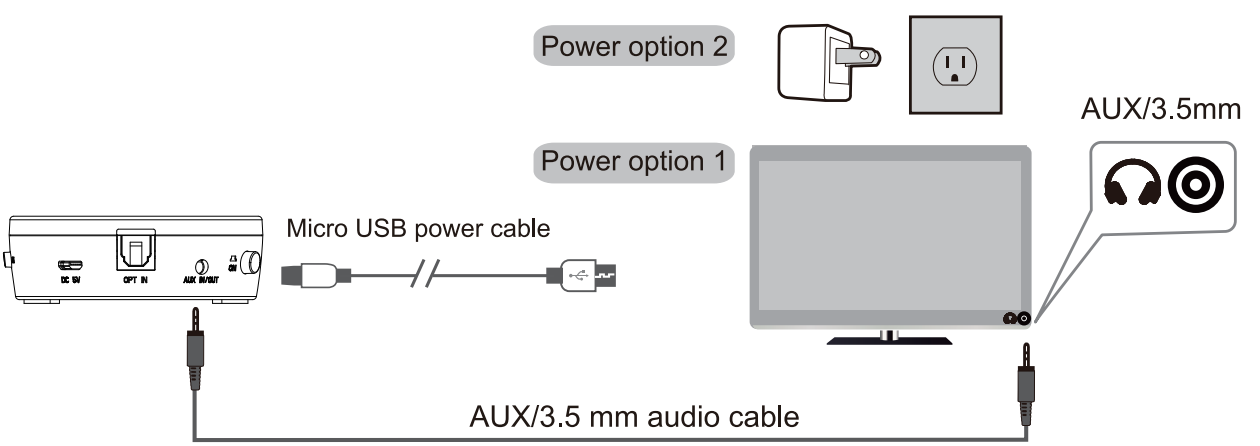

Default input audio sourcing: AUX IN

OPTION 3 - RCA

TVs with RCA audio out(Red/White ports labeled "AUDIO OUT")

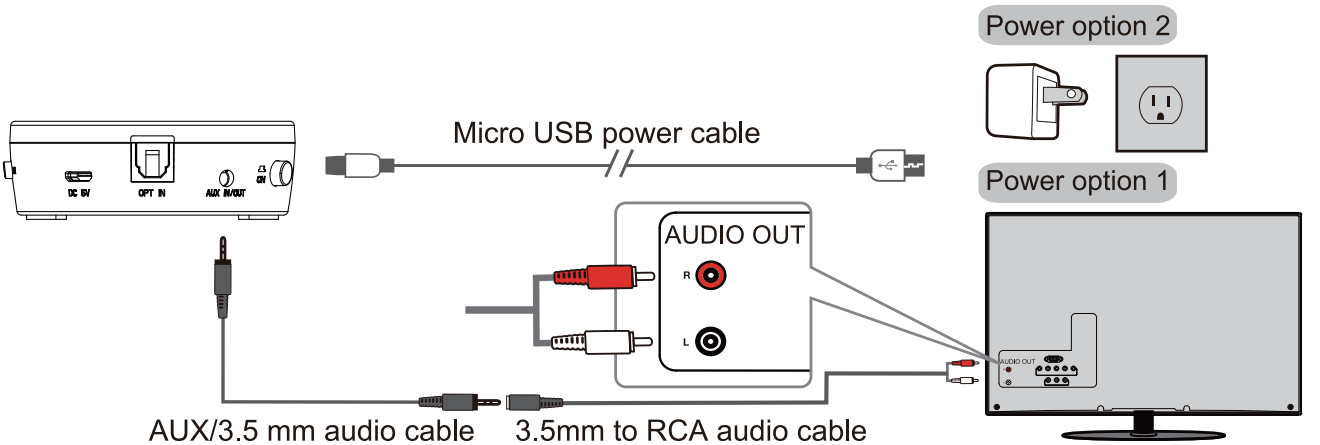

OPTION 4 - 6.35mm (for most audio receiver)

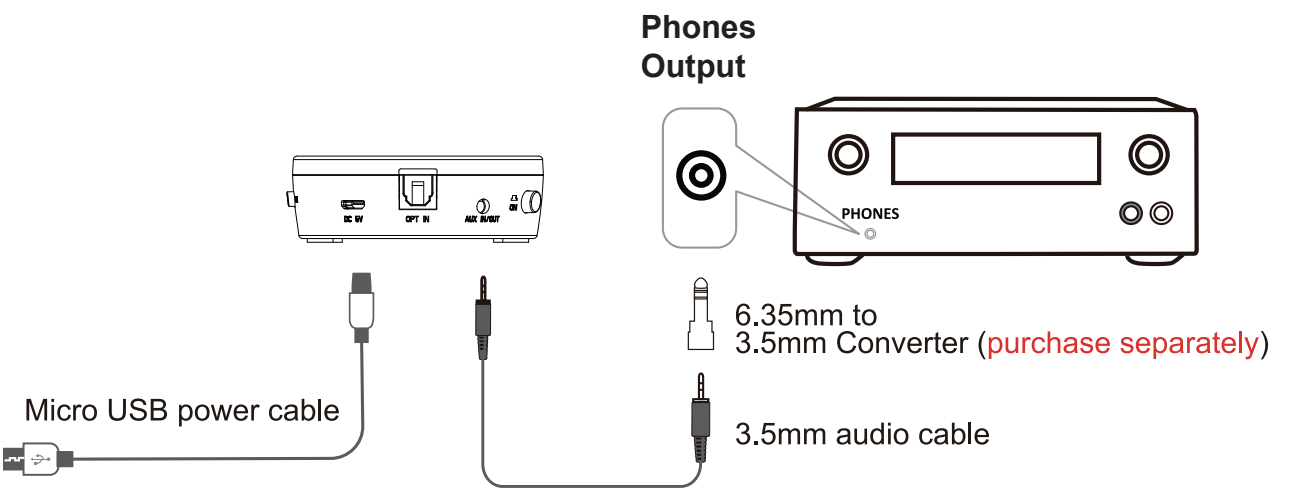

OPTION 5 - USB (on PC / Laptop)

The TM-01 transmitter supports 3.5mm audio input from your PC/Laptop. Connect the transmitter to PC/laptop via the included Micro USB charging cable.

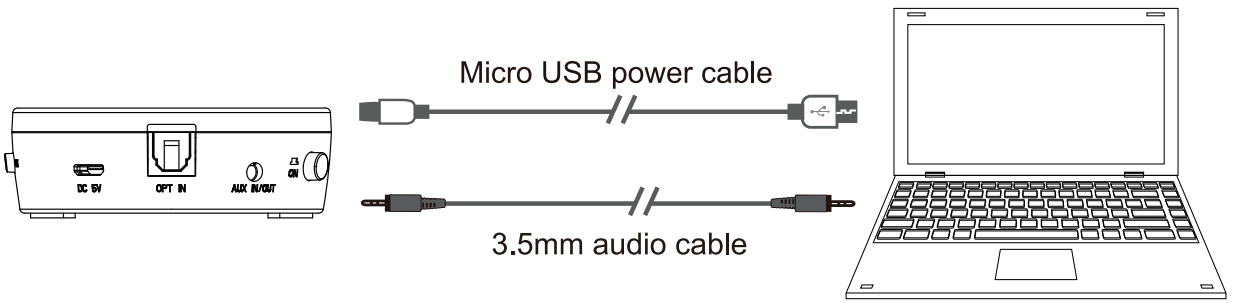

OPTION 6 - Receiver

Connect your device via 3.5mm audio cable/RCA Audio in (AUX in / RCA in), Speaker, Audio Amplifier

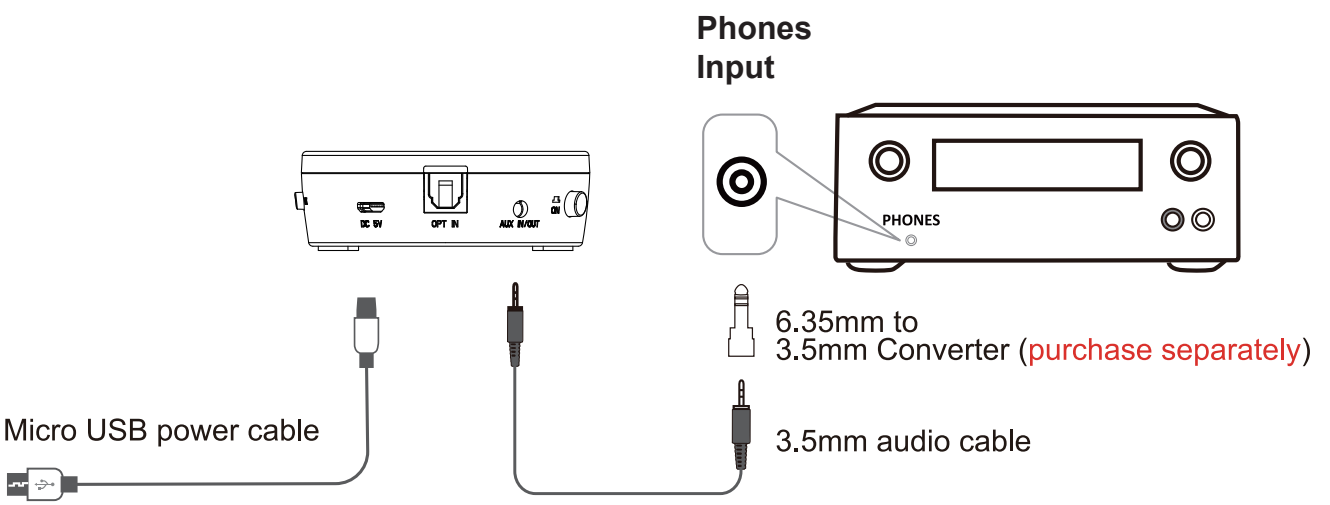

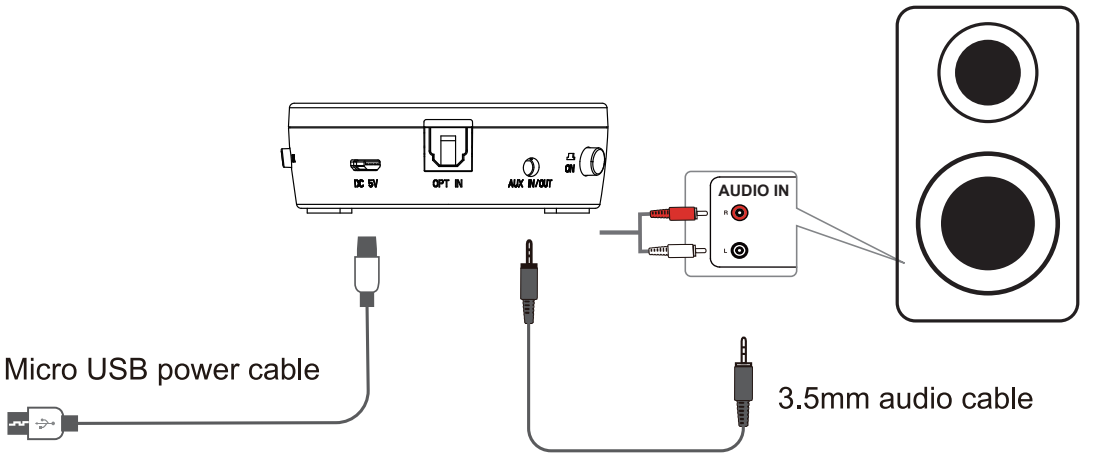

Note: There is no OPTICAL audio output under the receiver option

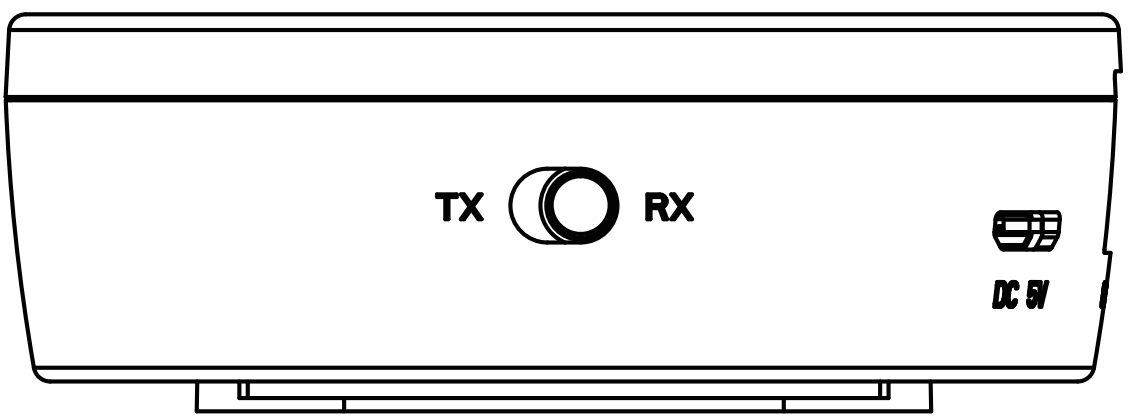

Transmitter(TX) / Receiver(RX) Mode Switch
Default mode: **Transmitter(TX) mode**

Quick User Guide

Pairing and connecting

Pair and connect to 1st Bluetooth head-phones/receiver

1) Power up and turn on the TM-01: Connect to USB charger using included Micro USB data/charging cable, slide the on/off switch to the“ON” position.

2) Enter the TM-01 into PAIRING MODE: On first use, the TM-01 will enter pairing mode automatically, indicator A flashes RED and BLUE alternately.

3) Enter 1st headphones/receiver into PAIRING MODE: Please refer to relevant user Manual.

4) Connecting: During the pairing process, keep the devices close to each other and wait. Once connected, the indicator A will turn BLUE.

Pair and connect to 2nd Bluetooth head-phones/receiver

1) Pair and connect 1st headphones to the TM-01: Please refer to above.

2) Enter the TM-01 into PAIRING MODE: Press and hold B for 1 second until indicator B flashed RED and BLUE alternately.

3) Enter 2nd headphones/receiver into PAIRING MODE: Please refer to relevant user manual.

4) Connecting: During the pairing process, keep the devices close to each other and wait. Once connected, the indicator B will turn BLUE.

2.Connect the TM-01 to your TV or other audio source

(Five options depends on your TV/other audio source, refer to “Audio Connection Options”)

Frequently Asked Questions

1.My headphones is already connected to the TM-01, why is there no sound from the headphones while watching TV?

1)Please ensure your TV audio is set to “External Speaker”

2)If your select OPTICAL audio input, please ensure:

a)Your TV audio is set to PCM format. TM-01 can decode PCM (≦16 bit/48 KHz), but cannot decode Dolby/DTS.

b)Ensure the 3.5mm audio cable is NOT plugged in, or TM-01 will prioritize the AUX input.

3)If you select AUX audio cable input, please ensure the TM-01 is connected to the correct analog audio port on audio source - plug in a pair of wired headphones/earbuds into your audio source’s audio output to check if it works.

2.Can I adjust volume from the TM-01?

The TM-01 does NOT have volume control. Please adjust volume via your audio source or your Bluetooth headphones/speakers.

3.Why is the range shorter than expected with frequent cutting in and out of audio?

1)There may be interference from other nearby devices like Wi-Fi routers or a smart TV box, etc. Please try changing the placement of the transmitter.

2)Physical obstructions between the devices. Please avoid using the headphones and transmitter with physical obstructions between them such as walls, partitions, metal dividers etc.

3)A one-off unstable Bluetooth connection. Clear the pairing history of BOTH DEVICES and then pair/connect again.

4)If you are using this set with a PC - please ensure your computer's USB driver is up-to-date. You can also try changing to another USB port.

4.How to power the TM-01?

The TM-01 does not have a built-in battery and requires USB power. Please plug it into your TV's USB port or a compatible USB charger (5V/0.5A)

Model	TM-01
Bluetooth version	5.0(Only support BR+EDR)
Operation frequency	2.402-2.480GHz
Supported profile	A2DP AVRCP
Operation range	UP to 100ft
Support dual stream (TX Mode)	Support (one transmitter connects two Bluetooth speakers or headphones simultaneously)
Support Multipoint (RX Mode)	Support connection to two mobile phones
CODEC	RX: aptX™ low latency、aptX™ 、AAC、SBC TX: aptX™ low latency、aptX™ 、SBC
Operating temperature	-10~55℃
Overall dimensions	ϕ67.2*23.95mm
Input power	≦5V/0.5A
Net weight	≈1.35oz (38.3g)

Package Contents:

1 x TM-01 Transmitter/Receiver
1 x RCA converter
1 x Optical cable
1 x User manual
1 x USB cable
1 x 3.5mm audio cable
1 x Magnetic Wall Mount Base

FCC Warning

This device complies with part 15 of the FCC Rules. Operation is subject to the following two conditions: (1) This device may not cause harmful interference, and (2) this device must accept any interference received, including interference that may cause undesired operation.

Any Changes or modifications not expressly approved by the party responsible for compliance could void the user's authority to operate the equipment.

Note: This equipment has been tested and found to comply with the limits for a Class B digital device, pursuant to part 15 of the FCC Rules. These limits are designed to provide reasonable protection against harmful interference in a residential installation. This equipment generates uses and can radiate radio frequency energy and, if not installed and used in accordance with the instructions, may cause harmful interference to radio communications. However, there is no guarantee that interference will not occur in a particular installation. If this equipment does cause harmful interference to radio or television reception, which can be determined by turning the equipment off and on, the user is encouraged to try to correct the interference by one or more of the following measures:

-Reorient or relocate the receiving antenna.

-Increase the separation between the equipment and receiver.

-Connect the equipment into an outlet on a circuit different from that to which the receiver is connected.

-Consult the dealer or an experienced radio/TV technician for help.

This equipment complies with FCC radiation exposure limits set forth for an uncontrolled environment. This equipment should be installed and operated with minimum distance 20cm between the radiator & your body.