Chapter 3

Description

1	**Models and options**	**3-3**
1.1	Minimum configuration	3-3
1.2	Available modules	3-4
2	**Components**	**3-6**
2.1	Focusing optics module overview	3-6
2.2	Requirements	3-13
2.3	Collimator with plug receptacle	3-14
2.4	Protective sleeve	3-16
2.5	Dual focus optics	3-17
2.6	Connecting piece	3-18
2.7	BEO D50 Smart interface module	3-19
2.8	Observation optics	3-20
2.9	Pyrometer outlet	3-22
2.10	Interface for sensor module	3-23
2.11	Lighting module	3-24
2.12	External lighting	3-25
2.13	Line laser	3-26

2.14	Lenses for welding	3-26
	BEO D50 Smart cassette receptacle with protective glass cassettes	3-30
	Crossjet and MVE nozzle	3-32
2.15	Connection plates	3-34
2.16	Focusing optics examples	3-36
3	**Functional description**	**3-41**
3.1	Beam guideway of the laser light	3-41
3.2	Beam guideway in the observation optics	3-46
3.3	Connection to the laser device	3-48

1. Models and options

The focusing optics has a modular design. Various modular system components can be combined, depending on the application.

Special applications may require special models.

1.1 Minimum configuration

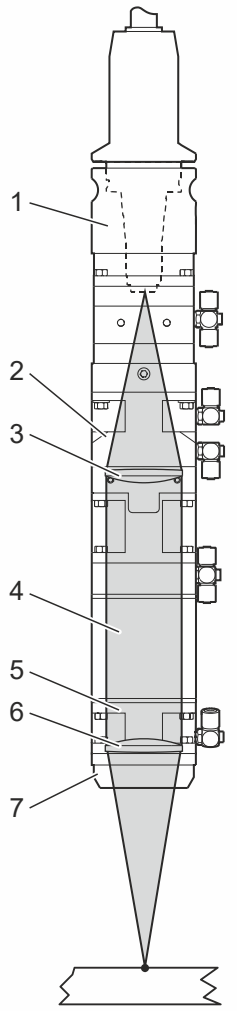

1	Plug receptacle	5	Lens
2	Collimation	6	Focusing lens
3	Collimation lens	7	Lens protection
4	Empty cube extension		

Minimum configuration of a focusing optics D50 with drawn-in beam path Fig. 3-1

Laser light Laser light is generated in the laser device and coupled into the laser light cable.

Plug receptacle with defocusing Plug receptacle (1) is for mounting the optical plug of the LLK.

Conical laser light is emitted from the LLK. The collimator lens (3) forms the collimated laser beam from this, which runs virtually parallel.

Empty cube extension The collimation is connected to the objective (4) via the empty cube extension (5).

Lens The focusing lens (6) in the objective focuses the laser beam on one point on the processing plane. This generates the high power density required for material processing.

Lens protection The lens protection (7) prevents soiling of the focusing lens.

1.2 Available modules

The modules available for the focusing optics D50 are listed below:

- Plug receptacle A with defocusing, focal length f35.
- Plug receptacle D with defocusing, focal length f35.
- Plug receptacle A.
- Plug receptacle D.
- Plug receptacle D SCL.
- Adapter LLK-B on LLK-D.
- Collimators f100, f125.
- X-Y offset.
- Beam formation module e.g. bifocal optics with fixed point distance.
- Connectors.
  - Empty cube.
  - 0° cube for fastening of the viewing optics.
  - 90° cube for deflecting the laser beam by 90°.
  - 90° cube for deflecting the laser beam by 90° and for fastening of viewing optics.
  - 2 x 90° double deflection for deflecting the laser beam and for mounting the observation optics.
- Objective for welding applications.
  - Objective, focal lengths f150, f200, f250, f300 (other focal lengths available on request).
  - BEO D50 Basic cassette receptacle with objective protective glass cassette and process protective glass cassette

and sensor block (proximity switch for presence of process protective glass cassette).
  - BEO D50 Smart cassette receptacle with objective protective glass cassette and process protective glass cassette and protective glass monitoring module.
  - Lens protection receptacle with protective glass holder.
  - Crossjet f150-f300.
- Optional modules for BEO D50 Smart.
  - Interface module (incl. cooling water monitoring module)
  - Gas monitoring module
- Coaxial lighting.
- Observation optics.
  - Observation optics for camera.
  - Observation optics for camera and sensor system outlet.
  - Observation optics for camera and pyrometer outlet.
  - Observation optics for sensor system outlet.
  - Observation optics for pyrometer outlet.
- Fastening plates.
  - Fastening plate D50 - D70.
  - Insulated fastening plate D50 - D70.
- Accessories.
  - Gas supply.
  - Adapter plate for KR30 TK100.
  - Adapter DIN ISO plate cpl.
  - DIN-ISO connection plate cpl.
  - Fastening plate for accessories.
  - External LED spot lighting.
  - Line laser.

The description of the individual components is subdivided into:

- Shielding gas supply lines (see "Shielding gas supply", pg. 2-45).
- all other components.

2. Components

In the following section you will find:

- the various demands on the focusing optics.
- a description of the various focusing optics modules.

2.1 Focusing optics module overview

Modular system

Focusing optics are composed of modules according to the requirements of the respective processing task.

The following figures show the most important modules available for focusing optics.

Module overview for BEO D50 Basic 0° and 90°

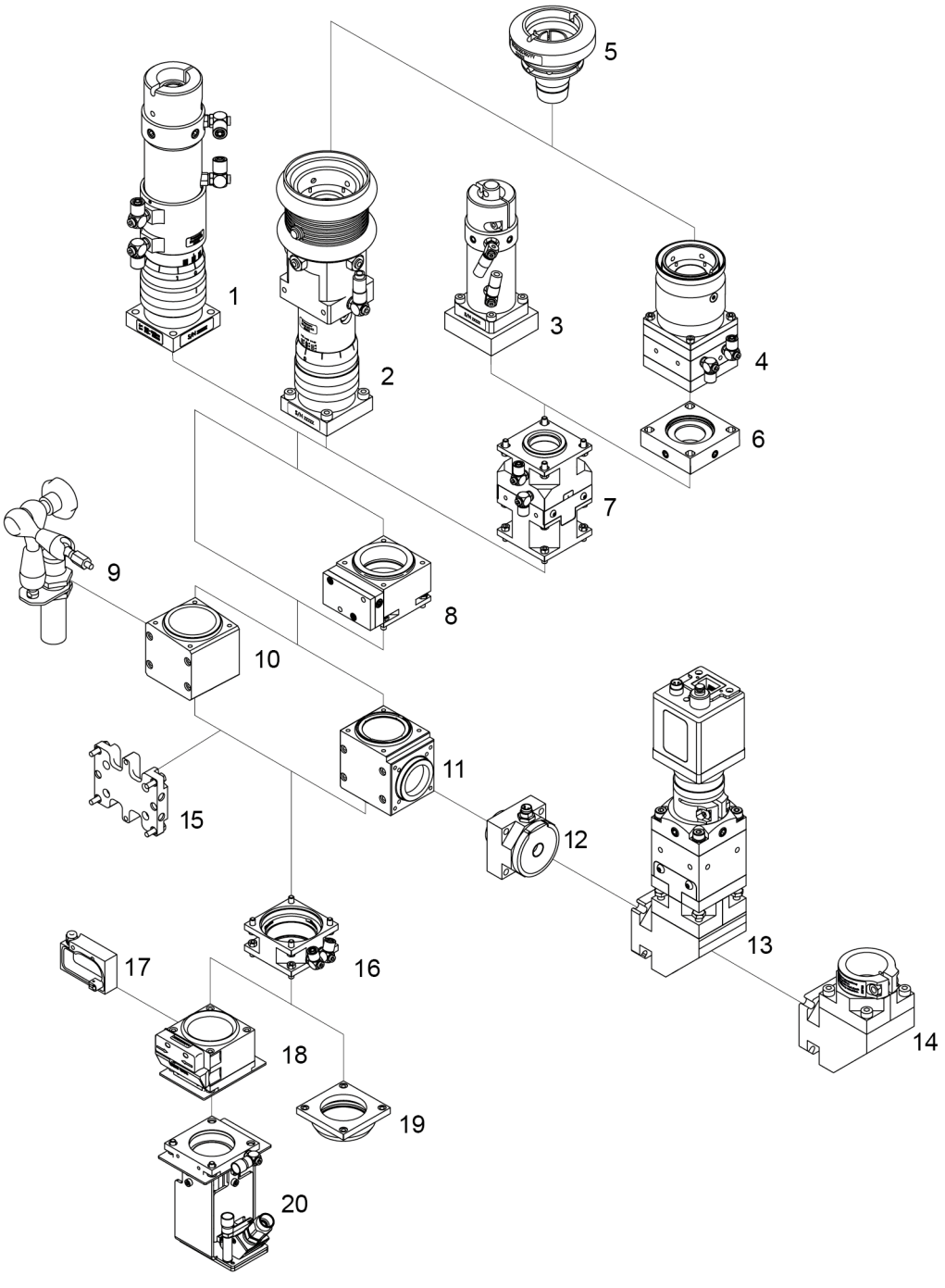

1 Plug receptacle A with defocusing, focal length f35
2 Plug receptacle D with defocusing, focal length f35
3 Plug receptacle A
4 Plug receptacle D
5 Adapter LLK-B on LLK-D
6 X-Y offset
7 Collimator with cooling block
8 Bifocal optics
9 External lighting
10 Empty cube
11 0° cube
12 Lighting module
13 Observation optics
14 Interface for sensor system
15 Fastening plate D50 - D70
16 Lens
17 Sensor block
18 Cassette holder with protective glass cassettes
19 Lens protection
20 Crossjet

Module overview, focusing optics BEO D50 Basic 0° Fig. 3-2

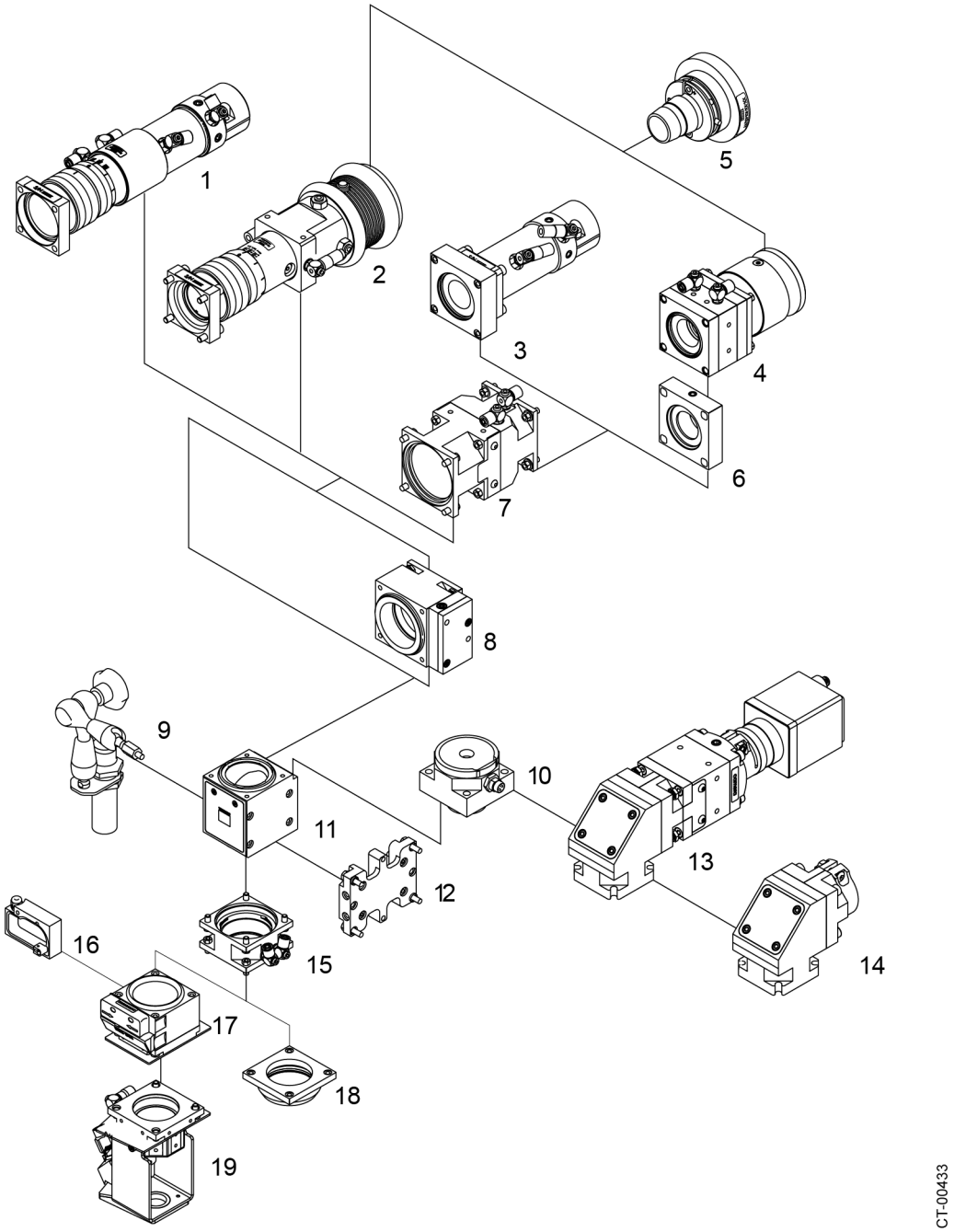

1 Plug receptacle A with defocusing, focal length f35
2 Plug receptacle D with defocusing, focal length f35
3 Plug receptacle A
4 Plug receptacle D
5 Adapter LLK-B on LLK-D
6 X-Y offset
7 Collimator with cooling block
8 Bifocal optics
9 External lighting
10 Lighting module
11 90° cube
12 Fastening plate D50 - D70
13 Observation optics
14 Interface for sensor system
15 Lens
16 Sensor block
17 Cassette holder with protective glass cassettes
18 Lens protection
19 Crossjet

Module overview, focusing optics BEO D50 Basic 90° Fig. 3-3

BEO D50 Basic with 2 x 90° double deflection

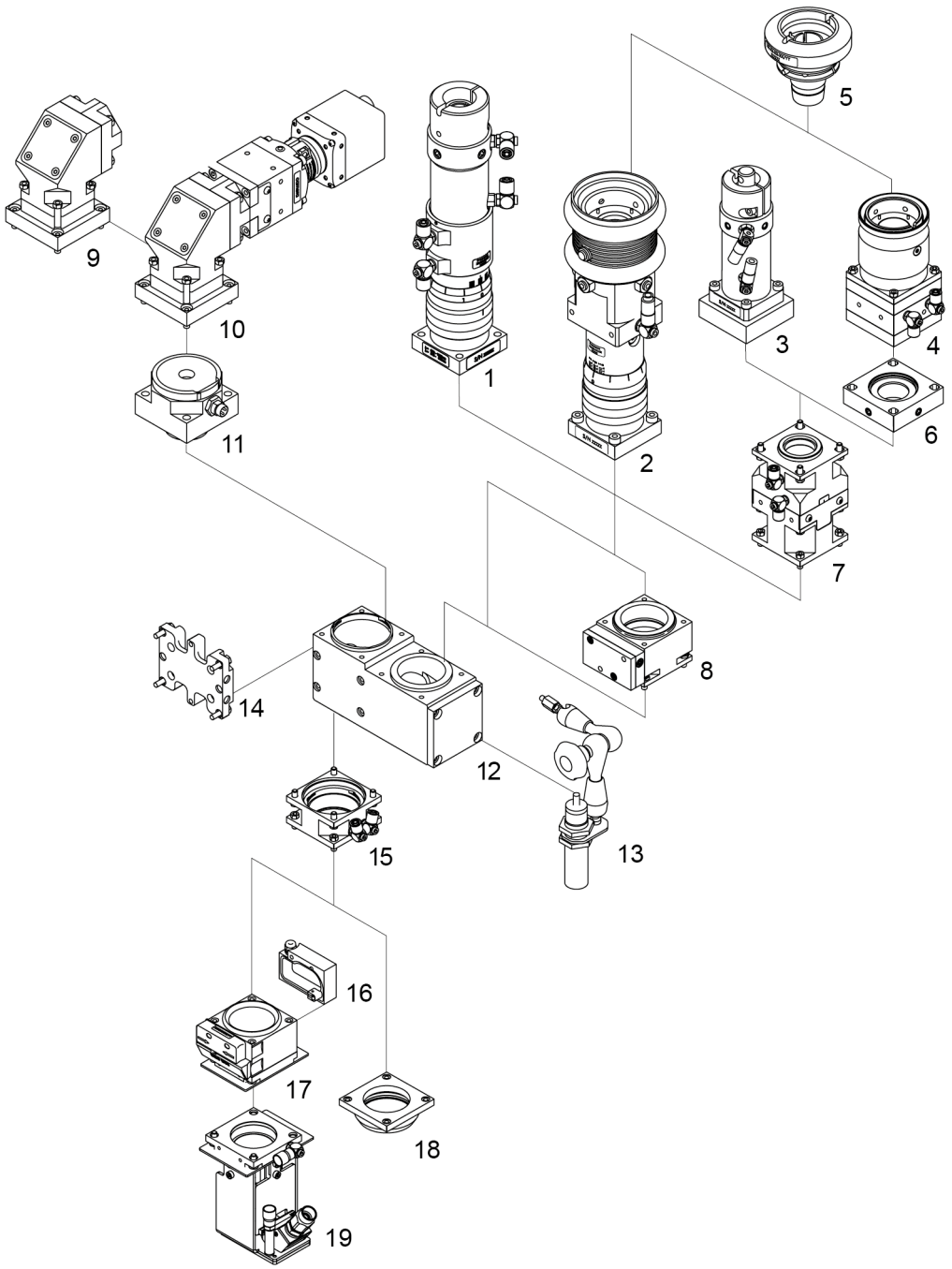

1 Plug receptacle A with defocusing, focal length f35
2 Plug receptacle D with defocusing, focal length f35
3 Plug receptacle A
4 Plug receptacle D
5 Adapter LLK-B on LLK-D
6 X-Y offset
7 Collimator with cooling block
8 Bifocal optics
9 Interface for sensor system
10 Observation optics
11 Lighting module
12 2 x 90° double deflection
13 External lighting
14 Fastening plate D50 - D70
15 Lens
16 Sensor block
17 Cassette holder with protective glass cassettes
18 Lens protection
19 Crossjet

Module overview, focusing optics BEO D50 Basic 2 x 90° Fig. 3-4

Module overview for BEO D50 Smart 0° and 90°

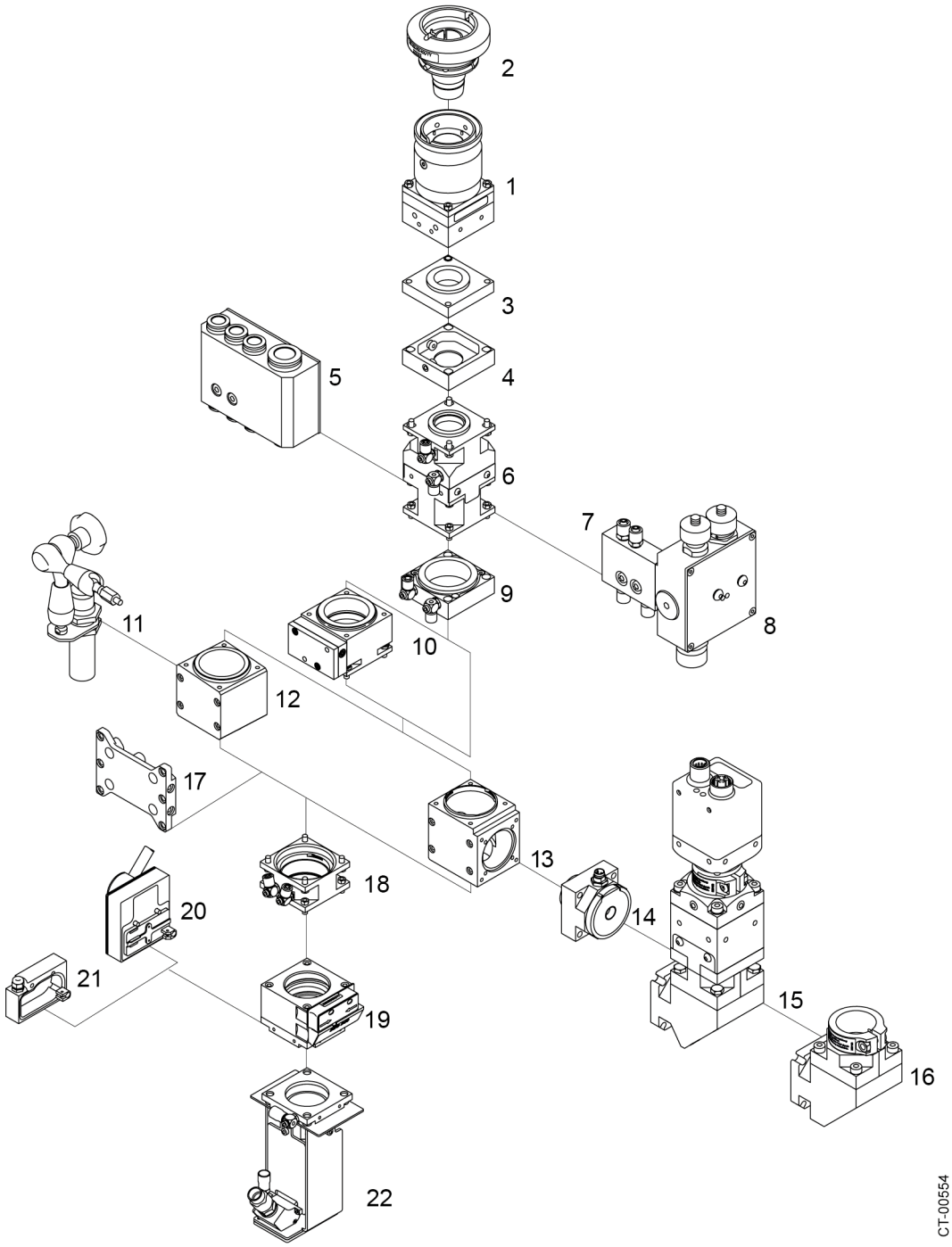

1	Plug receptacle D SCL	9	Cooling block	16	Interface for sensor system
2	Adapter LLK-B on LLK-D	10	Bifocal optics	17	Insulated fastening plate D50 - D70
3	Extension piece	11	External lighting	18	Lens
4	X-Y offset	12	Empty cube	19	Cassette holder with protective glass cassettes
5	Gas monitoring module	13	0° cube	20	Protective glass monitoring module
6	Collimation	14	Lighting module	21	Sensor block
7	Cooling water monitoring module	15	Observation optics	22	Crossjet
8	Interface module				

Module overview, focusing optics BEO D50 Smart 0° Fig. 3-5

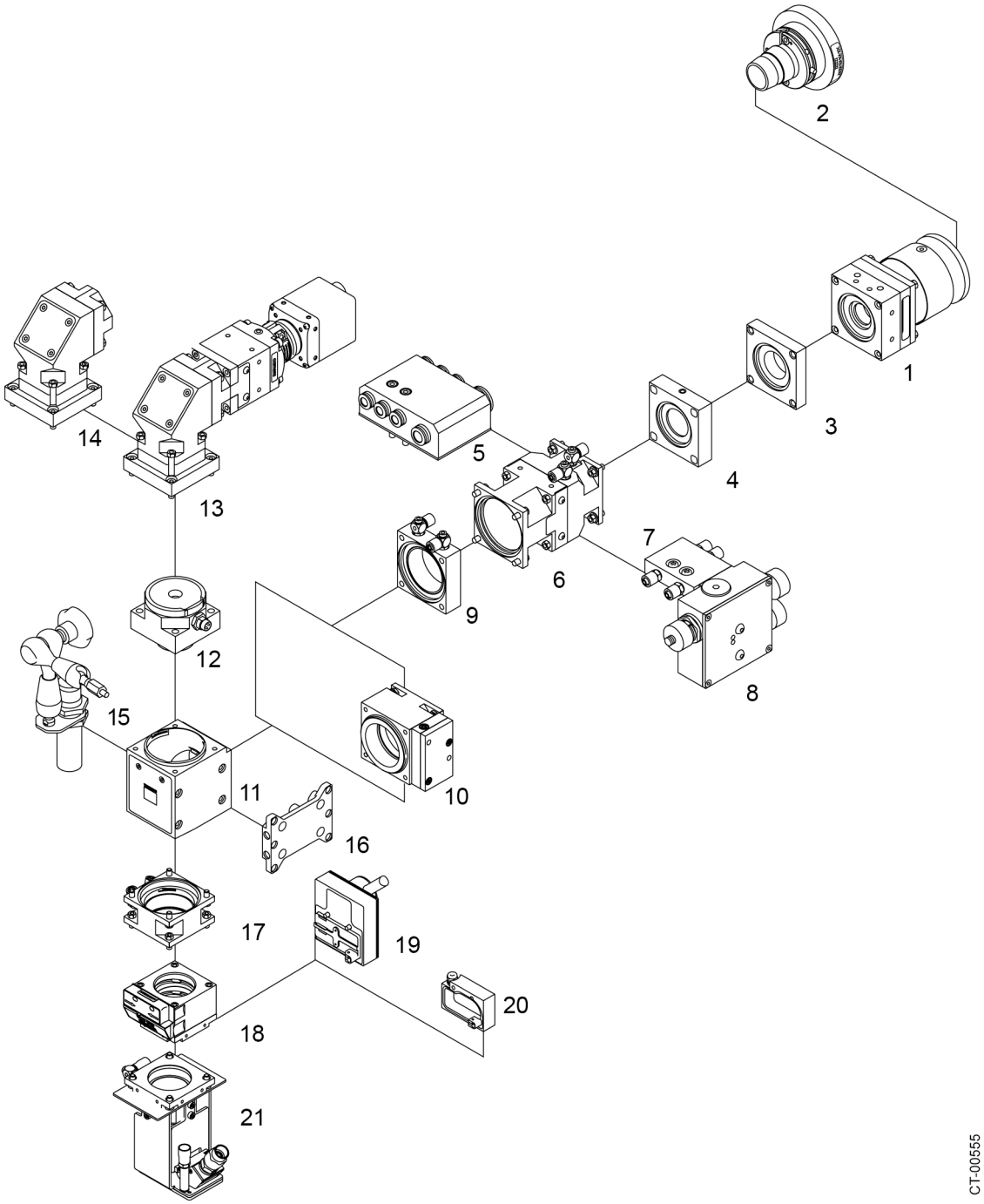

1	Plug receptacle D SCL	8	Interface module	15	External lighting
2	Adapter LLK-B on LLK-D	9	Cooling block	16	Insulated fastening plate D50 - D70
3	Extension piece	10	Bifocal optics	17	Lens
4	X-Y offset	11	90° cube	18	Cassette holder with protective glass cassettes
5	Gas monitoring module	12	Lighting module	19	Protective glass monitoring module
6	Collimation	13	Observation optics	20	Sensor block
7	Cooling water monitoring module	14	Interface for sensor system	21	Crossjet

Module overview, focusing optics BEO D50 Smart 90° Fig. 3-6

BEO D50 Smart with 2 x 90° double deflection

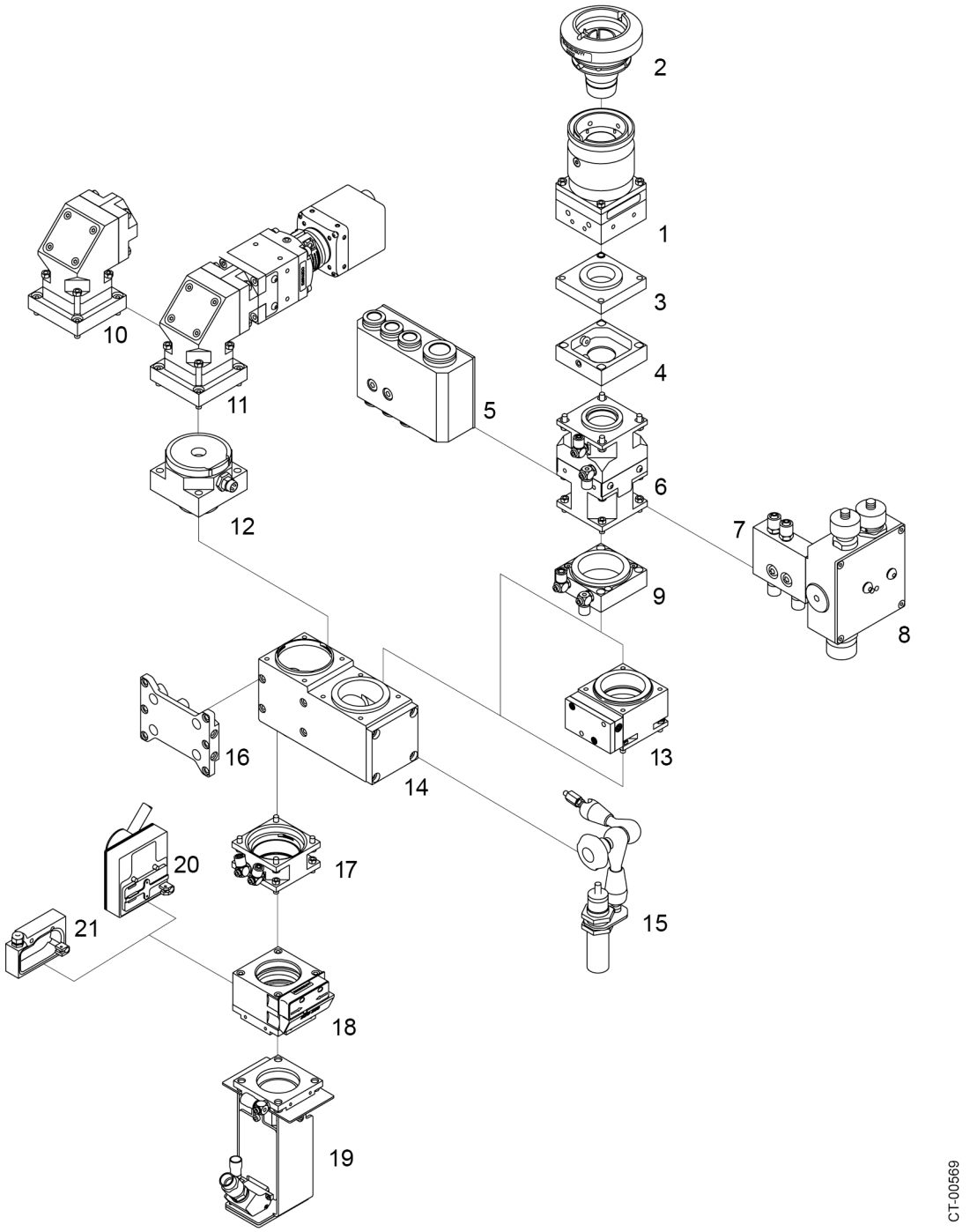

1	Plug receptacle D SCL	8	Interface module	15	External lighting
2	Adapter LLK-B on LLK-D	9	Cooling block	16	Insulated fastening plate D50 - D70
3	Extension piece	10	Interface for sensor system	17	Lens
4	X-Y offset	11	Observation optics	18	Cassette holder with protective glass cassettes
5	Gas monitoring module	12	Lighting module	19	Crossjet
6	Collimation	13	Bifocal optics	20	Protective glass monitoring module
7	Cooling water monitoring module	14	2 x 90° double deflection	21	Sensor block

Module overview, focusing optics BEO D50 Smart 2 x 90° Fig. 3-7

2.2 Requirements

Focal lengths

Depending on the machining task, lenses with various focal lengths are used. The focal length of lens has an effect on

- the working distance between lens and workpiece.
- the beam diameter and thus the power density at the machining point.
- the depth of focus and consequently on the machining depth in the workpiece.

Wavelengths

The focusing optics can be operated within different wavelength spectrums. The individual optical components are provided with adhesive labels that show the permissible wavelength spectrum.

A label with the information "λ= 1030 [930-1080]" means, for instance, that the focusing optics is set to 1030 nm and can also be operated between 930 nm and 1080 nm, but that it then has a different focus position.

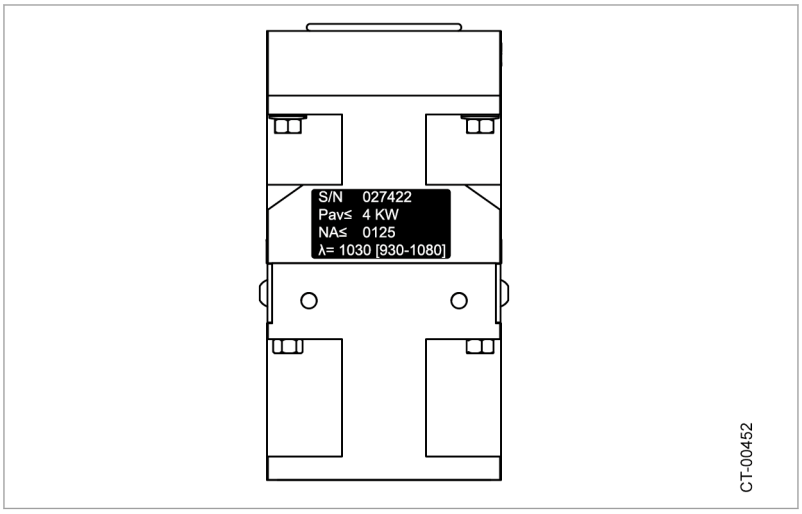

Collimation with adhesive label Fig. 3-8

The wavelength spectrum depends on the laser device to which the focusing optics are connected.

Applications

Focusing optics are used for:

- Welding: Welding optics.

Interaction with the material

Various interactions with the material may arise during welding applications, depending on the workpiece material:

- If the laser beam is strongly reflected by the workpiece, suitable measures for cooling the focusing optics have to be taken (e.g. copper and aluminum alloys).
- In case of increased metal deposits on the lens protection, the focusing optics can be equipped with a crossjet.

Observation options Focusing optics offer different observation methods:

- Camera for constant monitoring of the machining process.

Geometry Focusing optics are available in two designs:

- straight version (0°).
- angled version (90°).

Two weld points, two weld seams Dual focus optics can be used for simultaneous application of two weld points or two welding seams next to each other.

Special constructions Special constructions are possible for special applications.

2.3 Collimator with plug receptacle

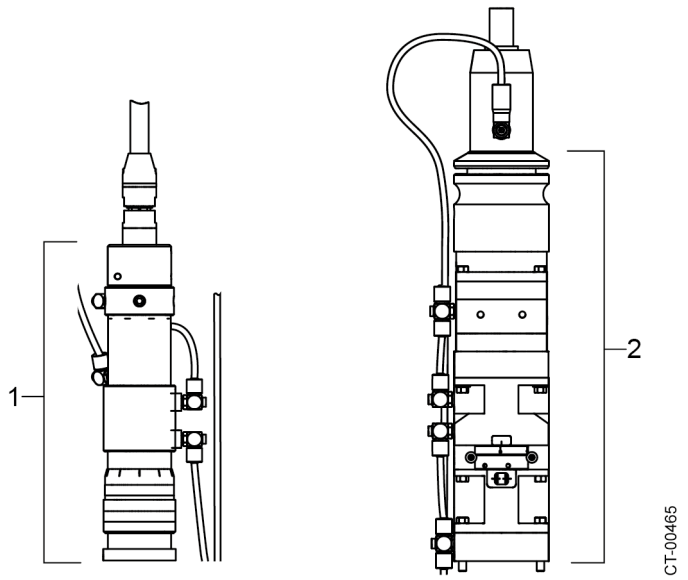

1 Plug receptacle A with defocusing for focal length f35

2 Plug receptacle D with collimation for focal length f100 and f125

Plug receptacle A (left) and plug receptacle D (right) Fig. 3-9

Laser light is generated in the laser device and coupled into the laser light cable.The plug receptacle holds the optical plug of the laser light cable and aligns the fiber end faces with the axis of symmetry of the optical unit.

The plug receptacle of the focusing optics is available in various versions:

- Plug receptacle A with defocusing, for LLK-A with focal length f35.
- Plug receptacle A with collimation, for LLK-A with focal length f100 and f125
- Plug receptacle D with defocusing, for LLK-D with focal length f35
- Plug receptacle D with collimation, for LLK-D with focal length f100 and f125

The LLK-B is inserted into plug receptacle D with an adapter.

Notes

- Focusing optics BEO D50 Smart can only be used with LLK-D.
- The connection hole must be sealed with the sealing plug intended for this purpose if no laser light cable is plugged in.

  When replacing the LLK, make sure that the plug receptacle lies horizontally. This is to prevent dirt from entering the opening of the plug receptacle from above.

Cooling unit

Cooling is required for a mean laser power of more than 600 W.

The focusing optics components are always prepared for connection of the cooling unit.

The cooled components are connected in series in the cooling circuit. The cooling water passes the components in the following order:

Plug receptacle - collimation – cooling block – objective – LLK-D plug (if used).

Collimation

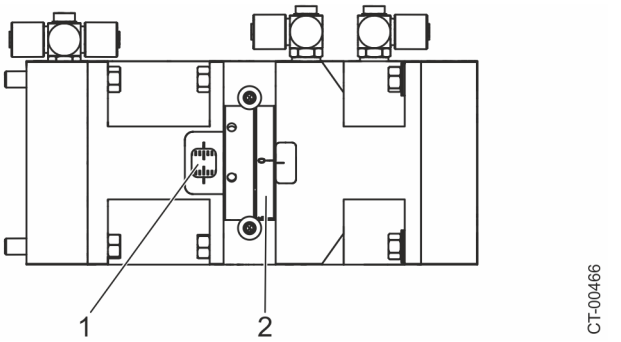

1 Scale 2 Setting ring with scale

Fig. 3-10

The collimation converts the conical laser beam coming out of the laser light cable to a parallel beam.

The collimation of focusing optics D50 has a focal length of 100 mm or 125 mm. The focal length of the collimation determines the dimensions of the focusing optics D50.

Zero position If collimation is set to zero, the focus position will correspond to the details in the dimensional drawing.

Set ring The focusing optics can be defocused by means of the setting ring. By defocusing the laser beam the focal point can be placed below or above the workpiece surface to be processed while the working distance remains the same.

Cover sheet The cover plate protects the setting ring from undesirable adjustment.

Scale The scale is applied in mm increments and the focus is moved variously depending on the focal length of the lens (see "Adjusting the focal position", pg. 4-6).

- Positive values: Focal point is above the workpiece surface.
- Negative values: Focal point is below the workpiece surface.

2.4 Protective sleeve

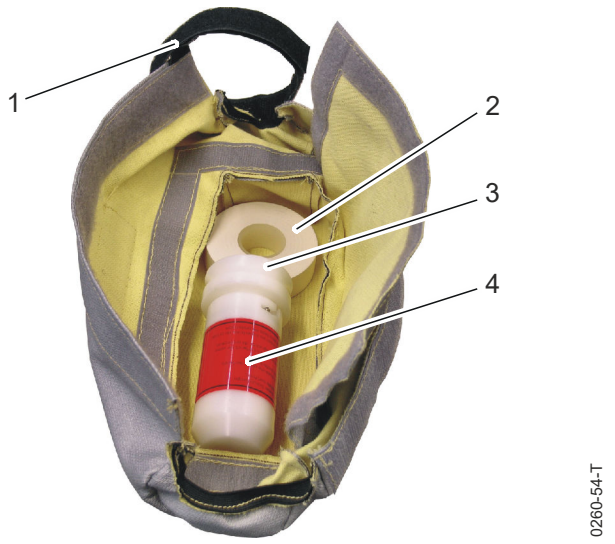

1	Velcro fastener	3	Sealing plug for plug receptacle
2	Adhesive tape (stock)	4	Protective cap for LLK plug

Fig. 3-11

The protective sleeve encloses the plug receptacle of the focusing optics and protects it from dirt.

To protect the LLK from dirt, TRUMPF recommends sealing the disconnection point between the LLK plug and the plug receptacle of the focusing optics with adhesive tape (see chapter "Mounting and installation").

Note

For sealing the disconnection point, use **exclusively PVC adhesive tape, 19 mm, material no. 1420313**.

Inside the protective sleeve, you will find a pocket where you should keep the following objects:

- Adhesive tape for sealing the disconnection point
- Plug and protective cap for covering openings.

Note

Make sure that the Velcro fastener is always tightly closed over the entire length of the protective sleeve during operation.

Tip

The Velcro fastener at the end of the protective sleeve can also be used to additionally fix media hoses.

2.5 Dual focus optics

The dual focus optics divides the laser beam into two partial beams. The lens focuses the two parts of the beam on different positions on the processing plane. This allows simultaneous application of two weld points or seams next to each other.

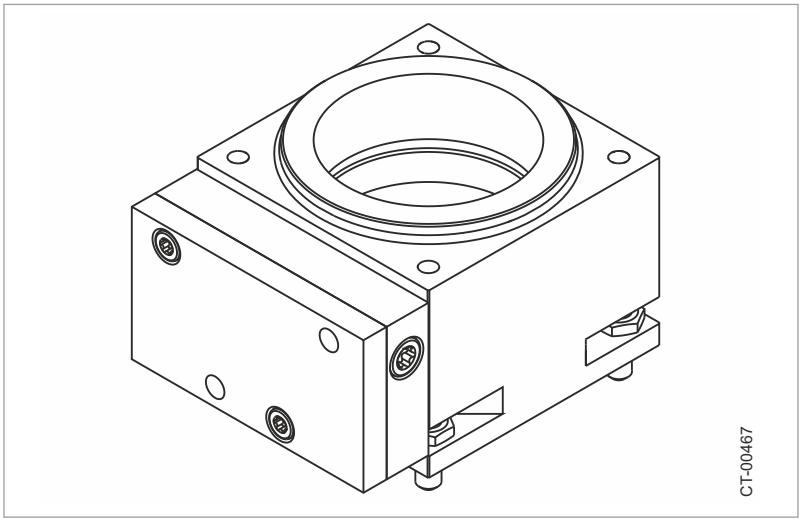

Dual focus optics Fig. 3-12

Division of the power

The bifocal optics of focusing optics D50 has a fixed set distance between the focal points and divides the laser beam into two partial beams of the same power.

If the laser light cable was replaced, it may be necessary to adjust the power splitting of the dual focus optics (see "Adjusting the dual focus optics", pg. 4-21).

Location of the focal points

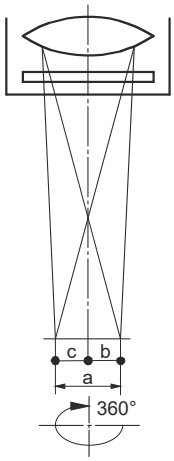

Fig. 3-13

The bifocal optics used and the lens determine the distance of the focal points to each other and to the center line.

The dual focus optics which suit your welding applications can be obtained from TRUMPF.

For detailed information, see the dimensional drawing of your focusing optics and the data sheet 22-50-17-A44-BC.

The focal points can be turned 360° around the middle axis (see "Turning the focal points around the center axis", pg. 4-21).

2.6 Connecting piece

A connecting piece is mounted between collimation and lens. Two different connecting pieces are used, depending on design and task of the focusing optics:

- Empty cube extension.
- 0° cube for fastening of the viewing optics.
- 90° cube for deflecting the laser beam by 90° and for attaching observation optics or a sensor outlet.
- 2 x 90° double deflection for deflecting the laser beam and for mounting the observation optics.

Fastening methods

Connecting pieces are used to fasten focusing optics to a support.

Note

In the case of focusing optics BEO D50 Smart, the fastening must be insulated.

Separating plate and deflection mirror

The 0° cube has a separating plate, the 90° cube has a deflection mirror. The 2 x 90° double deflection has two deflection mirrors.

The laser light or the visible light for observation is deflected in the cubes.

The empty cube extension however contains no optical element.

⚠ WARNING

If the deflector mirror or separating plate are damaged, your eyes and your skin may be exposed to laser light!

Laser light may be emitted straight ahead at a high power, thereby burning your skin or causing permanent damage to your eyes.

- Always close any unused connection for observation or a sensor system with a plate.
- Wear laser protection glasses that are appropriate for the wavelength of the laser light.

2.7 BEO D50 Smart interface module

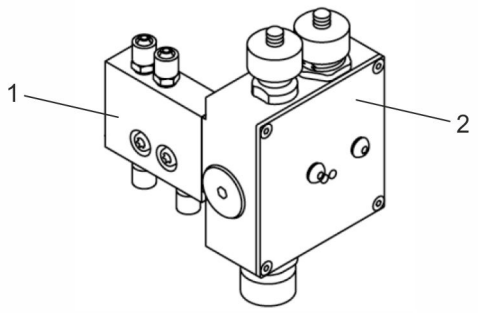

1 Cooling water monitoring module
2 Interface module

BEO D50 Smart interface module Fig. 3-14

The BEO D50 Smart interface module with cooling water monitoring module is attached to the collimator of the focusing optics and connects the focusing optics with the electronics of the laser device. It also monitors the scattered light on the LLK protective glass.

The temperature of the cooling water can be monitored within preset limits via the cooling water monitoring module.

2.8 Observation optics

The observation optics is the intermediate piece between separating plate or deflection mirror on the one hand and the camera on the other.

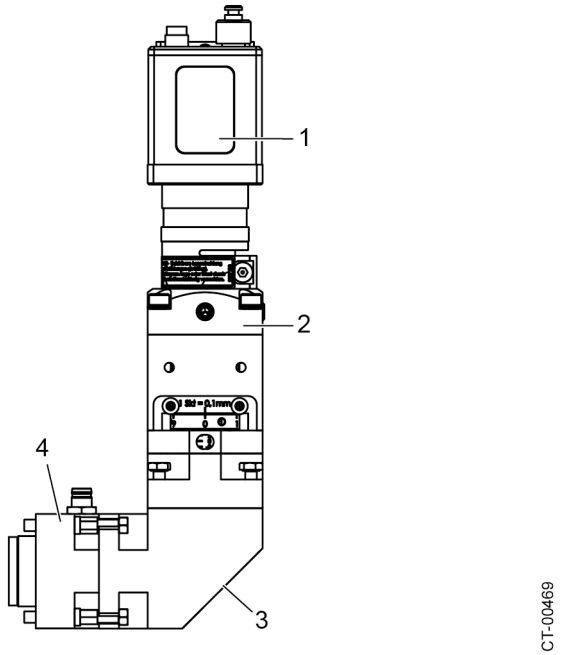

1	camera	3	Deflection
2	Observation optics	4	Coaxial lighting

Observation optics Fig. 3-15

The viewing optics consists of

- a filter keeping away the laser light.
- a deflection mirror (90° version only).
- a magnifying or demagnifying optics, if necessary.

To allow continuous observation of the machining process, a camera connected to a panel PC can be attached.

A larger or smaller reproduction of the machining point is possible with a magnifying optics or with a demagnifying optics.

The visible section of the processing point depends on the focal length of the lens, the magnification β of the observation optics and the camera used.

Chip 4.85 mm x 3.65 mm	Magnification		
Focal length of lens	**β = 0.4**	**β = 1**	**β = 2**
150 mm	18.2 mm x 13.7 mm	7.28 mm x 5.48 mm	3.64 mm x 2.74 mm
200 mm	24.25 mm x 18.25 mm	9.7 mm x 7.3 mm	4.85 mm x 3.65 mm
250 mm	30.31 mm x 22.81 mm	12.1 mm x 9.1 mm	6.05 mm x 4.55 mm
300 mm	36.38 mm x 27.38 mm	14.55 mm x 10.95 mm	7.28 mm x 5.48 mm

Visible section of the processing point on a TXG03 and TGX12 camera (digital output) Tab. 3-1

Chip 4.96 mm x 3.72 mm	Magnification		
Focal length of lens	**β = 0.4**	**β = 1**	**β = 2**
150 mm	18.6 mm x 13.95 mm	7.44 mm x 5.58 mm	3.72 mm x 2.79 mm
200 mm	24.8 mm x 18.6 mm	9.92 mm x 7.44 mm	4.96 mm x 3.72 mm
250 mm	31.0 mm x 23.25 mm	12.4 mm x 9.3 mm	6.2 mm x 4.65 mm
300 mm	37.2 mm x 27.9 mm	14.88 mm x 11.16 mm	7.44 mm x 5.58 mm

Visible section of the processing point on a VCXG15 camera (digital output) Tab. 3-2

A laser protective filter, installed in the observation optics, protects the operator against emitted laser radiation. This reduces laser light by 99.9 %. At constantly intense laser power, the 0.1% of residual light can quickly lead to the camera becoming defective. In such cases an additional filter needs to be installed.

For further information about the observation optics, see the operator's manual "VisionLine", doc. no.: 22-50-12-A0-CR and the operator's manual "VisionLine Cam", doc. no.: 22-50-12-A0-01-CR.

2.9 Pyrometer outlet

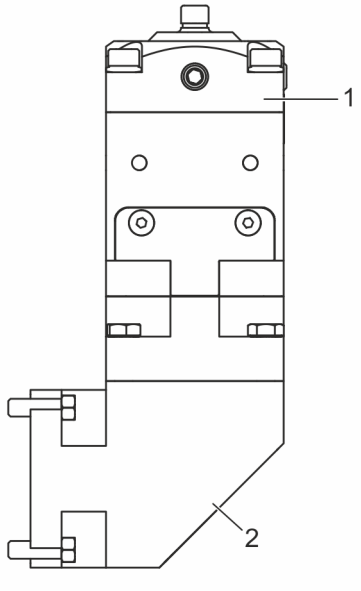

1 Pyrometer outlet 2 Deflection

Pyrometer outlet Fig. 3-16

The pyrometer outlet is used to hold the pyrometer's optical fiber to enable temperature control.

This is possible using the "Temperature Process Control Interface" technology package. For more information see the operator's manual for this, doc. no.: 20-50-01-A425-CR.

2.10 Interface for sensor module

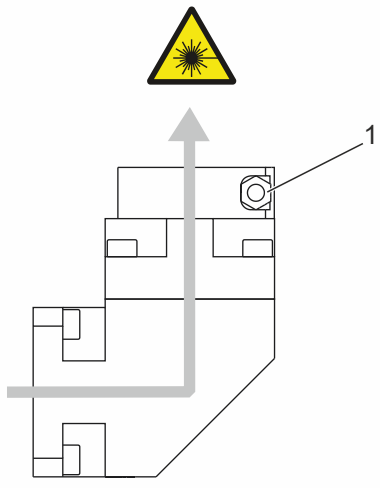

1 Safety screws

Interface for sensor module, Example 90° Fig. 3-17

A sensor module for process monitoring is connected via this interface. The sensor module detects the laser radiation reflected by the workpiece and the radiation emitted from the machining point.

There is **no laser protective filter** in the interface for the sensor module. Therefore use of the eyepiece or camera at this interface is **not allowed**. The interface is secured by way of safety screws (hexagon socket screws with pin).

During operation of the focusing optics, the sensor module has to be attached to the interface or the interface has to be protected against laser radiation emission by an aluminum sealing plug.

⚠ WARNING

There is no laser protective filter in the interface. If you use the interface without sensor module or sealing plug, your eyes and your skin may be exposed to laser light!

Laser light can burn your skin. Direct or scattered laser light can permanently damage your eyes.

- Never look into the interface.
- Use the focusing optics only if the interface is closed by a sensor module or a sealing plug.
- Never attach eyepiece or cameras to the interface.

2.11 Lighting module

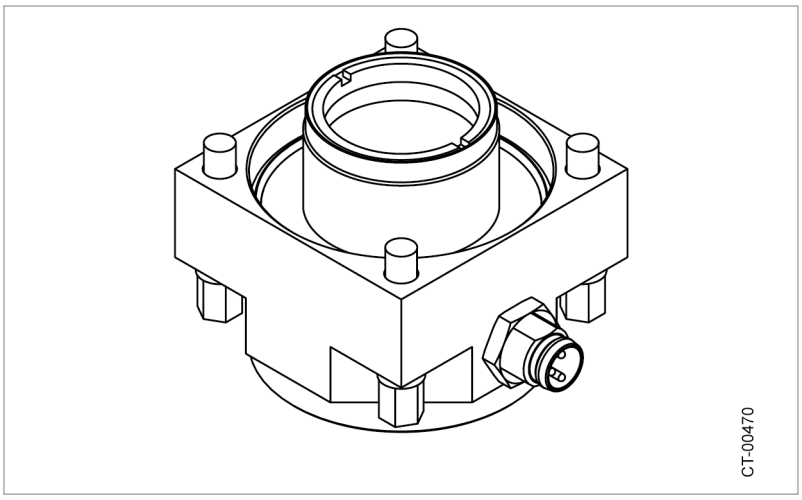

Fig. 3-18

The lighting module is used to light up the processing point during setup mode using a red light with a wavelength of 625 nm.

⚠ CAUTION

Rays from the lighting may cause damage to eyes!

Looking directly into the rays from the lighting, which are reflected by mirrored surfaces, may result in glare.

- Attach a sign warning people about this danger.
- Brief any persons potentially at risk.

The lighting is supplied with 24 V (see "Lighting connection", pg. 2-35).

2.12 External lighting

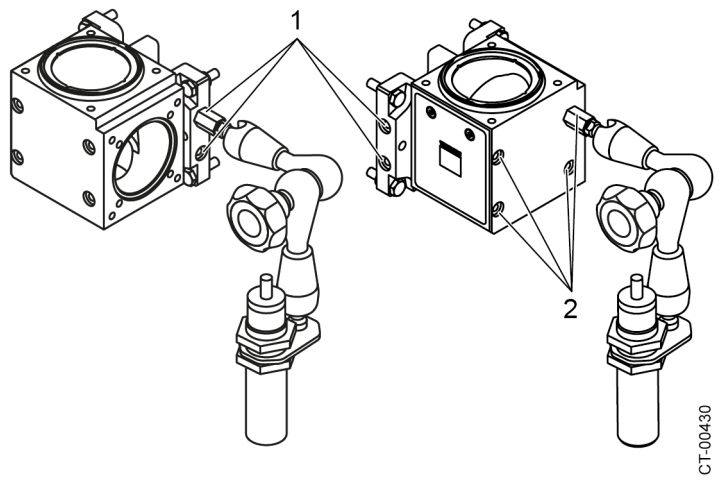

1 Fastening options on the fastening plate D50 - D70

2 Fastening options on the cube

Fig. 3-19

External lighting via the LED spot is used to light the processing point with a red light with a wavelength of 617 nm.

This can be screwed onto the (insulated) fastening plate D50 - D70 or onto the cube, and the spot orientation can be adjusted via an articulated arm.

⚠ CAUTION

Rays from the lighting may cause damage to eyes!

Looking directly into the rays from the lighting, which are reflected by mirrored surfaces, may result in glare.

- Attach a sign warning people about this danger.
- Brief any persons potentially at risk.

The lighting is supplied with 24 V (see "Lighting connection", pg. 2-35).

2.13 Line laser

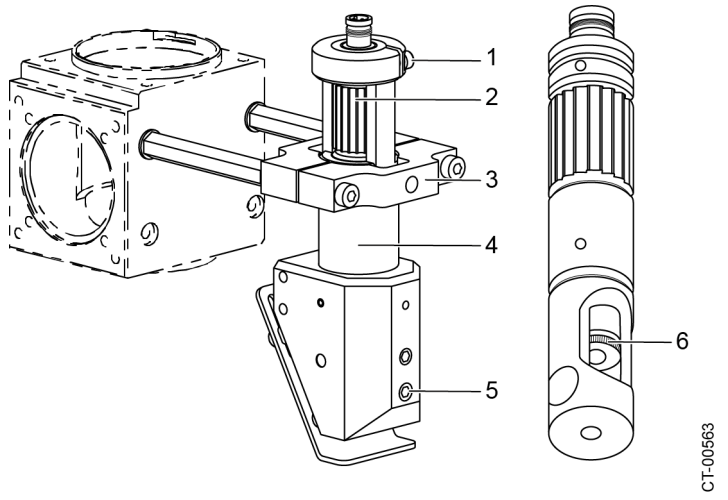

1	Clamping screw	4	Line laser
2	Laser module	5	Adjusting screw (linear adjustment)
3	Clamping holder, line laser	6	Knurl for axial adjustment

Line laser and removed laser module Fig. 3-20

The line laser together with the pilot laser are used to adjust the working distance in the setup mode.

Depending on the setup of the processing optics, the line laser is installed either on the cube, on the crossjet or on the end plate.

Before the line laser can be used for the working distance adjustment, it has to be adjusted (see "Adjusting the line laser", pg. 4-14).

The line laser is supplied with 24 V (see "Connection for line laser", pg. 2-36).

2.14 Lenses for welding

The lens focuses the collimated laser beam onto the workpiece surface. This generates the high power density in the focal point required for welding.

Focal length

The focal length of lens determines the working distance.

The focal length of the lens and the focal length of the collimator define together the aspect ratio. The fiber core diameter of the laser light cable and the aspect ratio define the focal diameter (see "Beam guideway of the laser light", pg. 3-41).

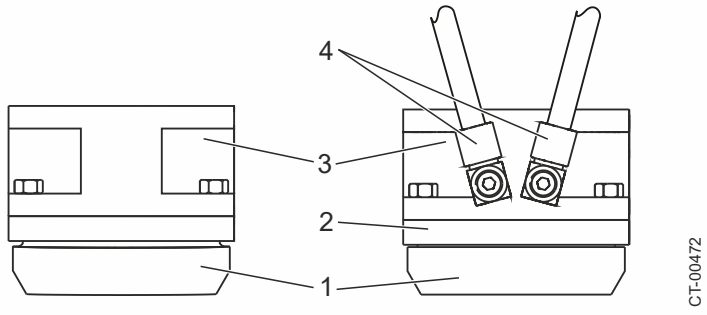

1	Lens protection	3	Lens
2	Lens protection receptacle	4	Cooling water connections

Lens with lens protection Fig. 3-21

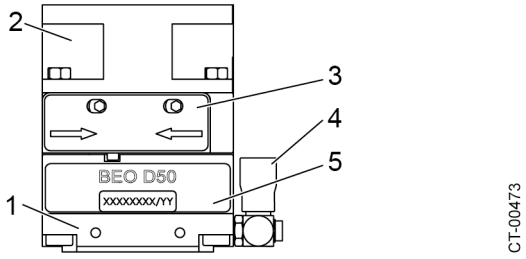

1	Connection plate, crossjet	4	Purging gas connection
2	Lens	5	Process protective glass cassette
3	Objective protective glass cassette		

Objective with cassette receptacle Fig. 3-22

The lens is sealed towards the workpiece:

- by means of a lens protection (see "Fig. 3-21", pg. 3-27).

  or

  a cassette receptacle with protective glass cassettes (see "Fig. 2-2", pg. 2-6).

Protective glass

The objective is terminated by lens protection or a cassette receptacle facing the workpiece. The lens protection and protective glass cassettes in the cassette receptacle contain protective glass, which protects the objective from dirt or damage.

During welding, material particles or material vapor may be deposited on the protective glass. The protective glass must be cleaned or replaced in this case (see "Welding optics", pg. 5-12).

Cassette receptacle

The cassette receptacle can be mounted on the objective in one of two positions (2 x 180°) as required.

The cassette receptacle contains two protective glass cassettes:

- Process protective glass cassette.
- Objective protective glass cassette.

The objective protective glass cassette protects the objective lens when the process protective glass cassette has been removed.

The protective glass monitoring module is used on the BEO D50 with a protective glass monitoring unit (see "BEO D50 Smart cassette receptacle with protective glass cassettes", pg. 3-30).

Cooling unit

The objective is always equipped with a cooling unit and must be cooled with mean laser powers above 600 W.

The cooled components are connected in series in the cooling circuit. The cooling water passes the components in the following order:

LLK-A

- Plug receptacle – collimator – objective.
  The supply always reaches the plug receptacle first.

LLK-D and LLK-B with adapter

- Plug receptacle D - collimator – cooling block – objective – LLK-D plug.
  The supply always reaches plug receptacle D first.
  The hose system is designed as shown in example (see "Fig. 3-23", pg. 3-29).

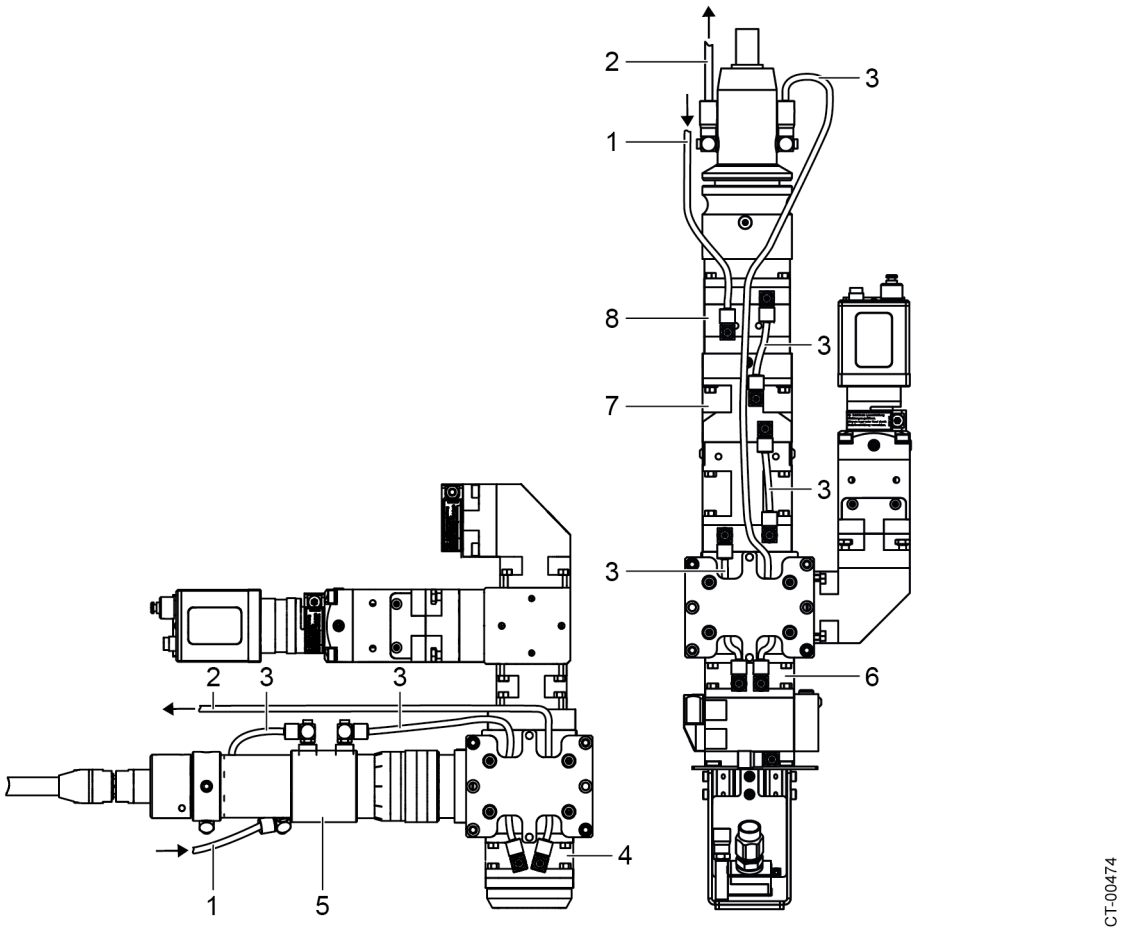

1	Supply	4	Focusing lens	7	Collimator f100 and f125
2	Return	5	Cooling ring for plug receptacle with defocusing f35	8	Plug receptacle LLK-D
3	Connecting hose	6	Objective with cooling block		

Hose system (examples) Fig. 3-23

BEO D50 Smart cassette receptacle with protective glass cassettes

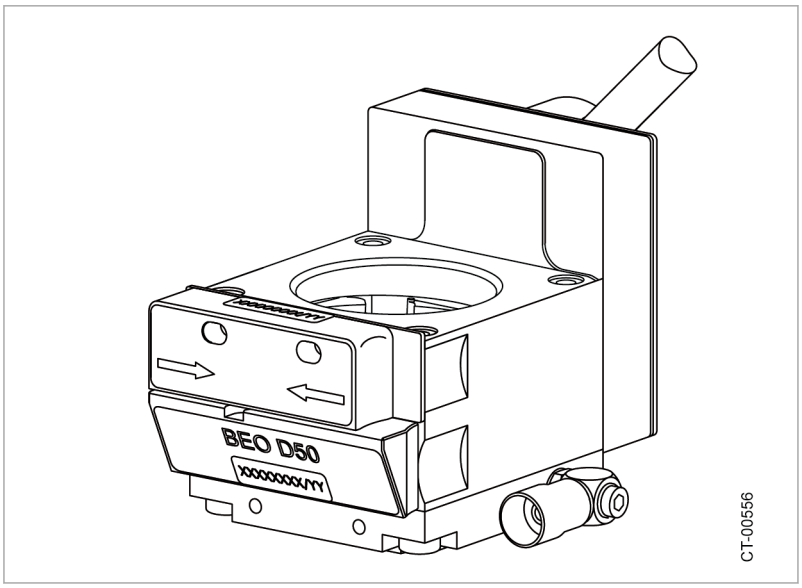

Fig. 3-24

The BEO D50 Smart cassette receptacle can be mounted on the objective in one of two positions (2 x 180°) as required.

The cassette receptacle contains two protective glass cassettes:

- Process protective glass cassette.
- Objective protective glass cassette.

The objective protective glass cassette protects the objective lens when the process protective glass cassette has been removed.

During welding, material particles or material vapor may be deposited on the protective glass. Cleaning or replacing the protective glass is then necessary (see chapter “Maintenance”).

The protective glass can easily be cleaned or replaced without any tools (see chapter “Maintenance”).

Protective glass monitoring

During operation, the scattered light monitoring module monitors the contamination of the protective glass.

To do this, the protective glass monitoring module communicates wirelessly with the data memory on the protective glass using RFID.

Note

Only protective glass from TRUMPF with an RFID chip may be used.

The following is measured and monitored:

- Protective glass contamination
- Cassette presence
- Use of correct protective glass
- Scattered light of protective glass

A message is displayed on the screen of the operating PC if the contamination of the protective glass exceeds the permissible range set in TruControl 1000. In this case, the protective glass must be cleaned or replaced (see the "Maintenance" chapter).

Note

To be able to monitor the soiling of the protective glass, the monitoring must be enabled in TruControl 1000. For more information on this topic, please refer to the software manual of the controlled focusing optics.

LED display

The protective glass monitoring module has a diagnostic display made up of green and red LEDs:

- Red LED off and green LED continuously illuminated = normal operation
- Red LED on and green LED flashing slowly = error status (external error)
- Red LED on and green LED flashing quickly = malfunction detected

Setting limit values

The maximum allowed contamination of the protective glass is established by the monitoring limit value. The limit values are defined by the user depending on the application, and are entered in the “Application data” window in TruControl 1000 (see software manual of the controlled focusing optics).

Note

To activate protective glass monitoring, the "Active" selection checkbox must be activated.

For information about setting the application data of the focusing optics, refer to the software manual of the controlled focusing optics.

Monitoring limit

If the measured value for the contamination of the protective glass reaches the monitoring limit, a monitoring message is displayed in the message bar.

Fault limit

When the measured value reaches the fault limit, the light path will be disabled. To eliminate the fault, the protective glass must be cleaned or replaced. After that, the light path can be enabled again by pressing the Light path reset in the light path menu (see chapter “Identification and elimination of malfunctions").

NOTICE

If the focusing optics is started following a fault message, without having eliminated the cause of the fault, laser light may be emitted from the focusing optics for a few milliseconds.

This uncontrolled welding may destroy the workpiece.

➢ Eliminate the fault on the focusing optics immediately.

Crossjet and MVE nozzle

A crossjet can be used on the cassette receptacle for welding applications with strong spatter and vapor formation.

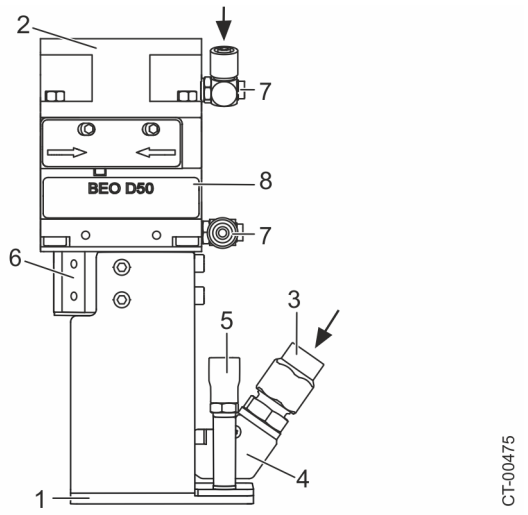

1	Splash guard and MDE nozzle	5	Connection for MDE nozzle
2	Lens	6	Crossjet support
3	Air supply connection for cross-jet	7	Purging gas connection
4	Crossjet	8	Cassette receptacle

Objective with crossjet Fig. 3-25

Air supply

Below the crossjet receptacle is the connection for the supply air and the crossjet connected to it.

The crossjet generates an air flow horizontal to the laser beam focus. The air flow deflects particles and vapors from the protective glass. Impurities on the protective glass are reduced.

Note

To optimize the effect of the crossjet, the air supply must remain switched on for about 3 seconds before starting and after finishing welding.

When the air supply is switched on, the supply air needs some time to built up pressure in the crossjet.

After finishing welding, smoke rises, which has to be deflected away from the protective glass.

Cleaned and dried compressed air is used as supplied air.

	Focal length of lens f150	**Focal length of lens ≥ f200**
Gap width	0.5 mm	0.3 mm
Pressure	approx. 5 bar	approx. 3.5 bar
Air consumption	approx. 500 l/min	approx. 210 l/min

Compressed air Tab. 3-3

The compressed air used must comply with the specification according to DIN ISO 8573-1:

- Max. particle size 1 µm
- Max. pressure dew point 7 ℃
- Max. oil concentration 1 mg/m^3

Spatter guard

A spatter guard (1) is mounted to the crossjet support .

Depending on the lens focal length used, a spatter guard having a suitable bore diameter is used.

Adjustment information

The crossjet pressure must be set according to the ambient conditions and the amount of spatter produced.

Scavenging gas

The purging gas is conducted from the connector into the interior of the crossjet. From there the purging gas flows towards the workpiece, preventing smoke residue rising up to the protective glass. This reduces contamination of the protective glass in addition to the effect of the crossjet.

Scavenging gas	Oil and water-free compressed air or nitrogen
Consumption	approx. 6 l/min

Tab. 3-4

MDE nozzle

The MDE nozzle is attached to the crossjet (MDE means metal vapor effect).

During the laser welding process, the laser light may be reduced or deviated due to the particles in the metal vapor (plasma torch). This may lead to welding depth fluctuations and to irregular weld surfaces.

Cleaned and dried compressed air according to DIN ISO 8573-1 is supplied toward the processing plane via the connection for

the MDE nozzle. The air flow of the MDE nozzle eliminates the plasma torch.

Hose diameter	6 mm
Air consumption (focal length of lens f150)	approx. 35 l/min
Air consumption (focal length of lens ≥ f200)	approx. 50 l/min

Compressed air Tab. 3-5

The actually required pressure depends on the plasma torch of the respective welding application.

Note

On the focusing optics BEO D50 without a gas monitoring module, adjust the air consumption (flow) directly in front of the MVE nozzle in the supply air line using a suspended solid particle flowmeter and a throttle valve.

2.15 Connection plates

The connection plates are used to mount the focusing optics to robot hands and for assembly of accessories on the focusing optics.

DIN-ISO connection plate

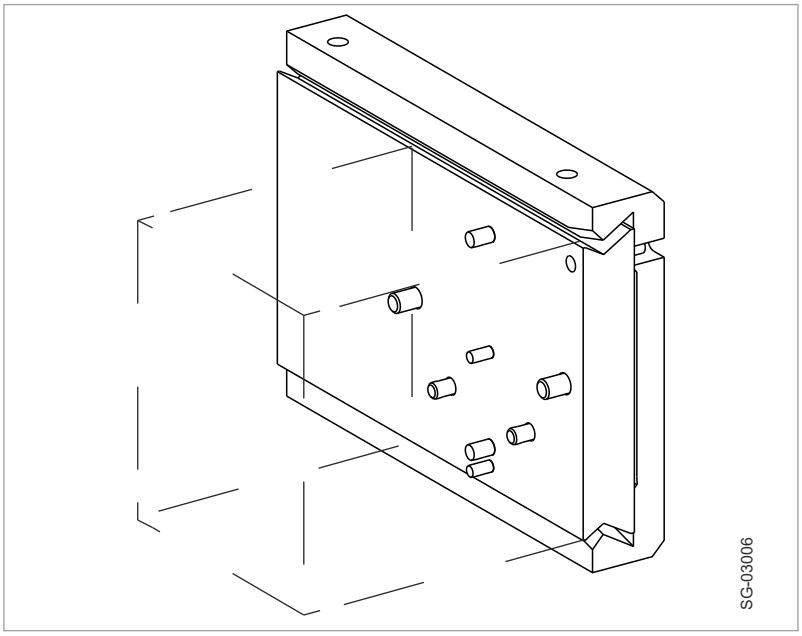

DIN-ISO connection plate Fig. 3-26

According to DIN ISO 9409-1, the DIN-ISO connection plate is provided with:

- a centering unit D 31.5
- a pitch circle TK ∅ 50 for M6 screws and pin ∅ 6.

KR30 connection plate

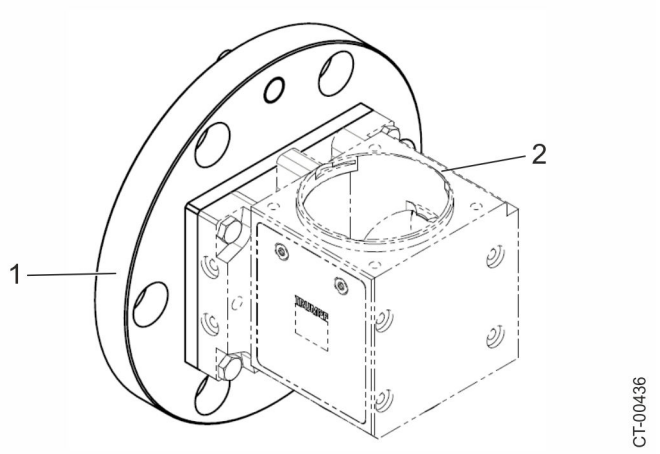

1 KR30 connection plate TK100 2 Cube with fastening plate D50 - D70

Accessories connection plate Fig. 3-27

Connection plate KR 30 TK100 has a pitch circle TK of ∅ 100 for M8 screws and a pin of ∅ 8.

Fastening plate D50 - D70 (insulated)

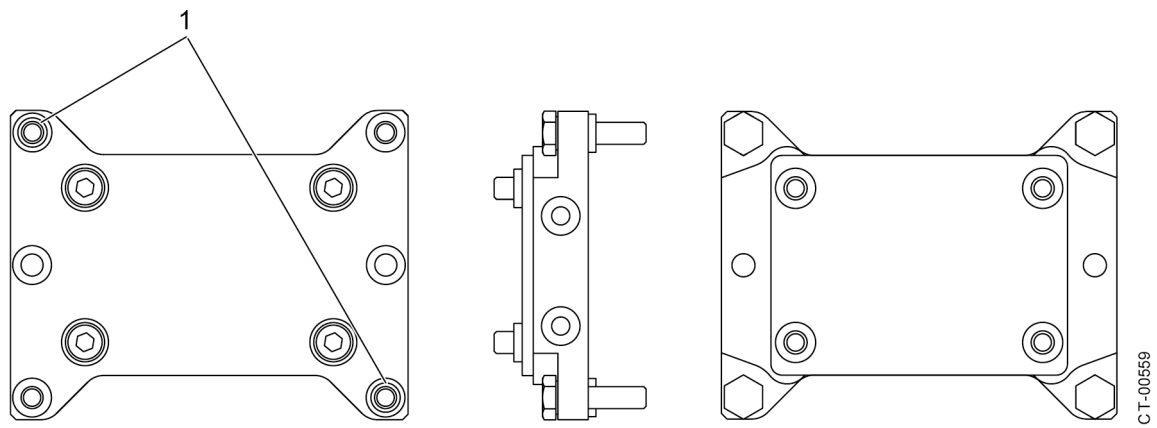

1 Centering sleeves ZBH7

Fastening plate D50 - D70 with insulating plate Fig. 3-28

Fastening plate D50 - D70 allows focusing optics D50 to be compatibly fastened to focusing optics D70.

The integrated insulating plate allows the electrically insulated fastening of the focusing optics.

Note

The focusing optics BEO D50 Smart must always be fastened so that they are electrically insulated.

Accessories connection plate

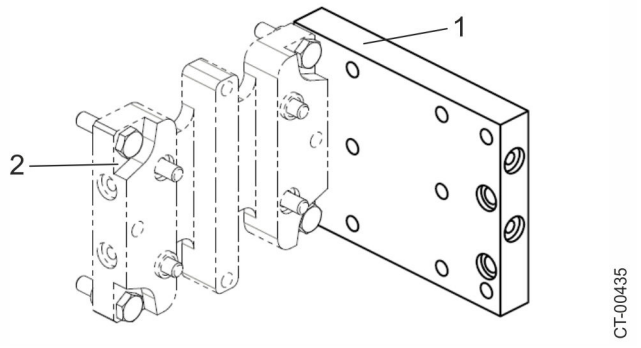

1 Accessories connection plate 2 Fastening plate D50 - D70

Accessories connection plate Fig. 3-29

The connection plate for accessories is attached to fastening plate D50 - D70 and used for fastening accessory parts, such as external lighting.

2.16 Focusing optics examples

The following examples show some typical configurations of focusing optics that are possible using the available components.

Dimensional drawings

The configuration of your focusing optics is to be found on the dimensional drawings, included in the delivery of your laser device.

Please contact TRUMPF for further information on available focusing optics.

Examples

The figure below shows two examples of straight (0°) focusing optics: the one without and the other with observation optics.

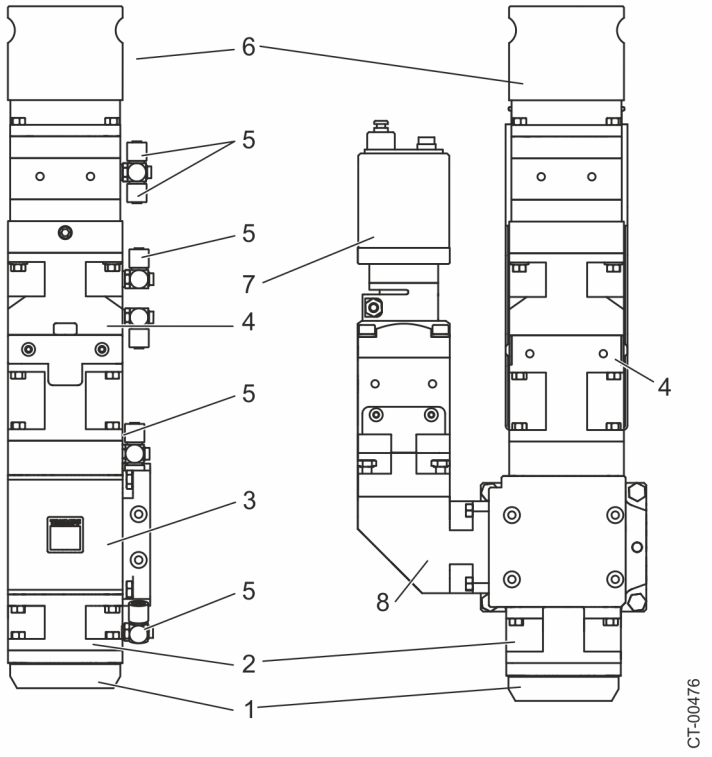

1	Lens protection	5	Connections for cooling unit
2	Lens	6	Plug receptacle LLK D
3	Empty cube	7	camera
4	Collimation	8	Observation optics for camera

Focusing optics BEO D50 Basic, straight (0°) Fig. 3-30

The following figure shows straight (0°) focusing optics with plug receptacle D, cassette receptacle and crossjet.

In this example, plug LLK-D, plug receptacle D, the collimator and the cassette receptacle are cooled.

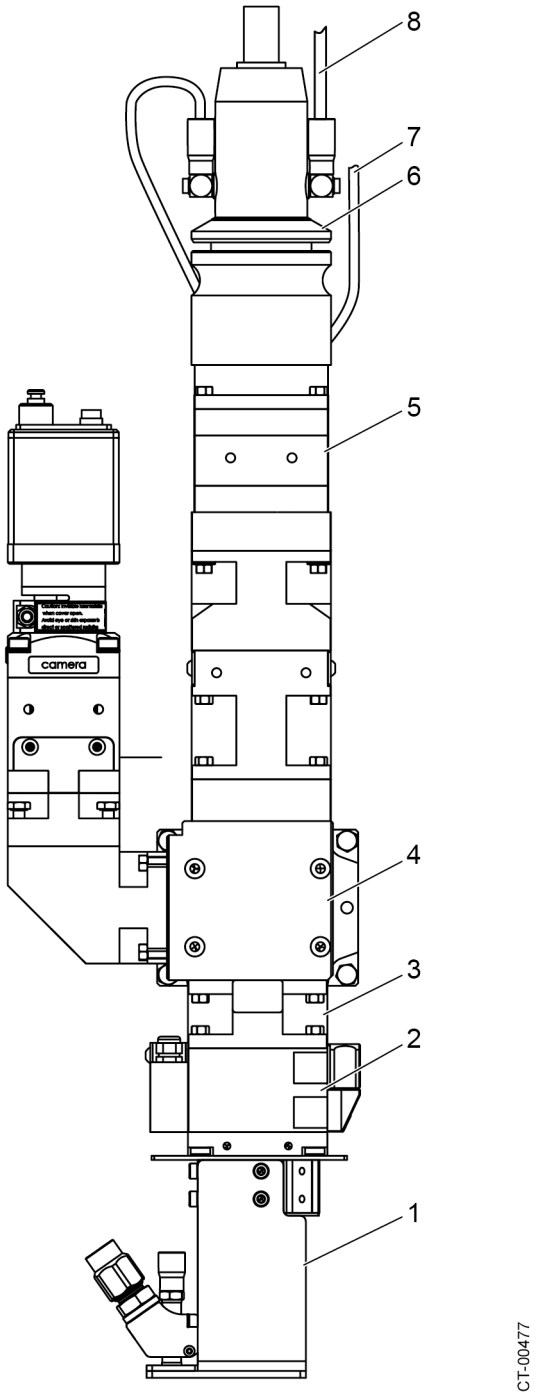

1	Crossjet	5	Plug receptacle D
2	Cassette receptacle	6	Plug LLK-D
3	Lens	7	Cooling water supply
4	0° cube	8	Cooling water return

Focusing optics BEO D50 Basic with cassette receptacle and crossjet — Fig. 3-31

The following figure shows focusing optics BEO D50 Basic with 2 x 90° double deflection, crossjet, pyrometer outlet and a monitoring option using a camera.

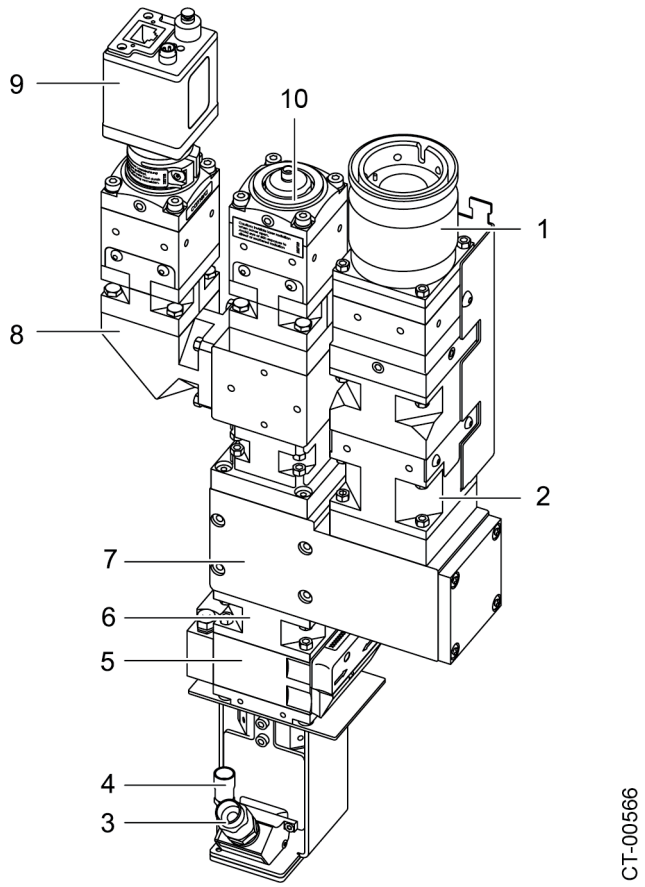

1	Plug receptacle D	6	Lens
2	Collimator with cooling block	7	2 x 90° double deflection
3	Crossjet connection	8	Observation optics
4	Coaxial MVE nozzle connection	9	camera
5	Cassette holder with protective glass cassettes	10	Pyrometer outlet

Focusing optics BEO D50 Basic with 2 x 90° double deflection — Fig. 3-32

The following figure shows straight (0°) focusing optics BEO D50 Smart with plug receptacle D SCL, cassette receptacle and crossjet.

In this example, plug LLK-D, plug receptacle D SCL, the collimator and the cassette receptacle are cooled.

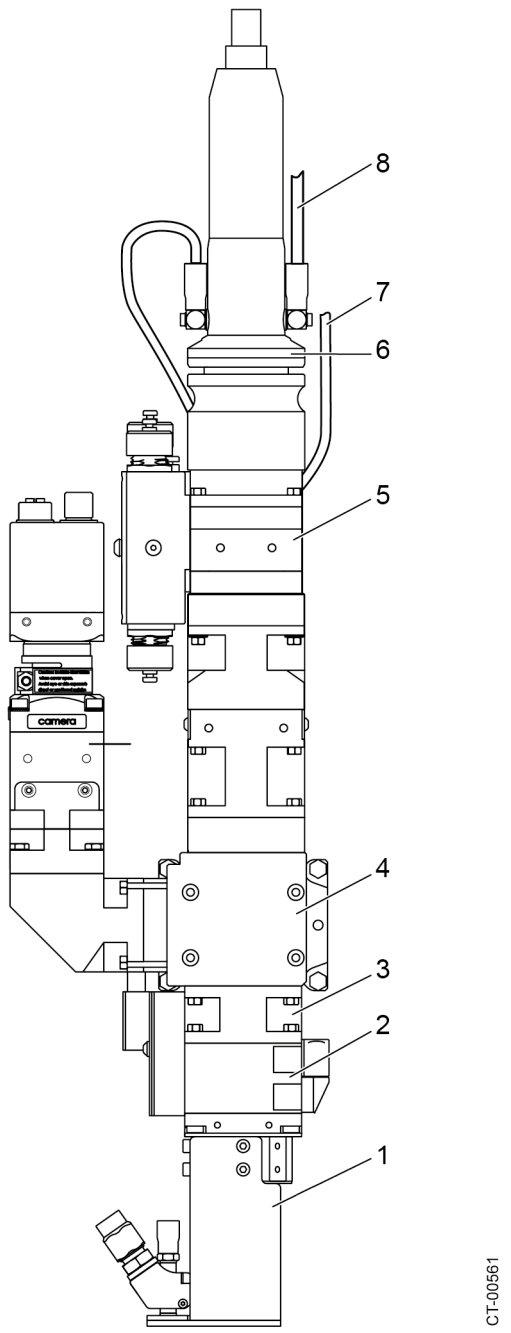

1	Crossjet	5	Plug receptacle D SCL
2	Cassette receptacle	6	Plug LLK-D
3	Lens	7	Cooling water supply
4	0° cube	8	Cooling water return

Focusing optics BEO D50 Smart with cassette receptacle and crossjet — Fig. 3-33

3. Functional description

3.1 Beam guideway of the laser light

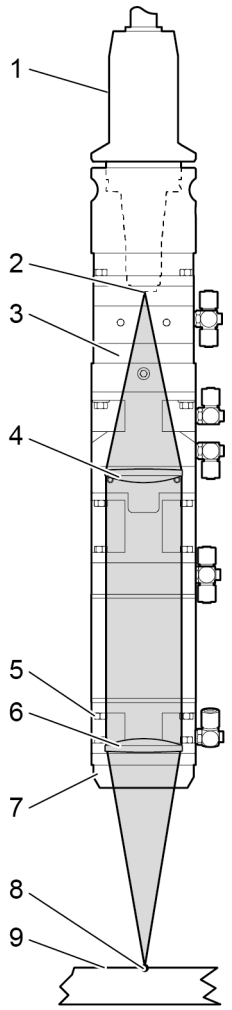

1	Optical plug of the laser light cable (LLK-D)	6	Focusing lens
2	End of the laser light cable	7	Lens protection
3	Plug receptacle	8	Focal point
4	Collimation lens	9	Workpiece
5	Lens		

Focusing optics D50, schematic diagram Fig. 3-34

Beam guidance

In case of a beam guidance through the laser light cable, a conical laser beam comes out of the end of the laser light cable. The collimation lens converts this beam into a parallel beam. The focusing lens focuses the laser beam onto the workpiece.

Focal length of collimation

The focal length of the collimation unit f_c determines the distance between the fiber end of the laser light cable and the colli-

mation lens. Focusing optics D50 have a collimator with a collimation focal length f_c = 125 mm, f_c = 100 mm or f_c = 35 mm as standard.

Focal length of lens

The focal length of lens f determines the distance between focusing lens and focal point.

Lenses with the following focal lengths can be used in the focusing optics D50:

- f = 150 mm.
- f = 200 mm.
- f = 250 mm.
- f = 300 mm.

For information on special focal lengths, please contact TRUMPF.

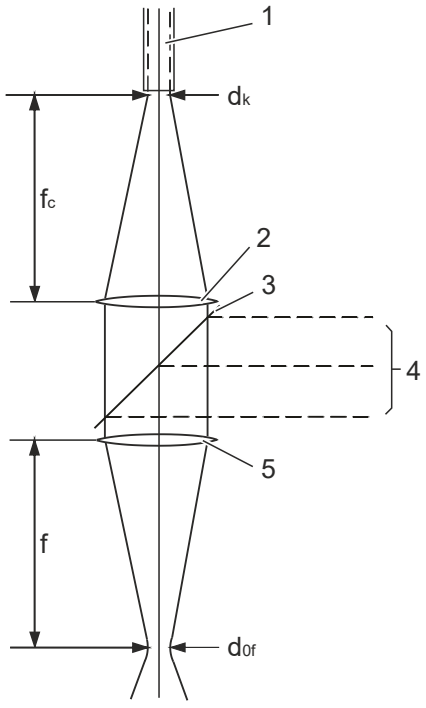

1	Optical fiber	4	Observation
2	Collimation lens	5	Focusing lens
3	Separating plate		

Beam guideway in a 0° focusing optics Fig. 3-35

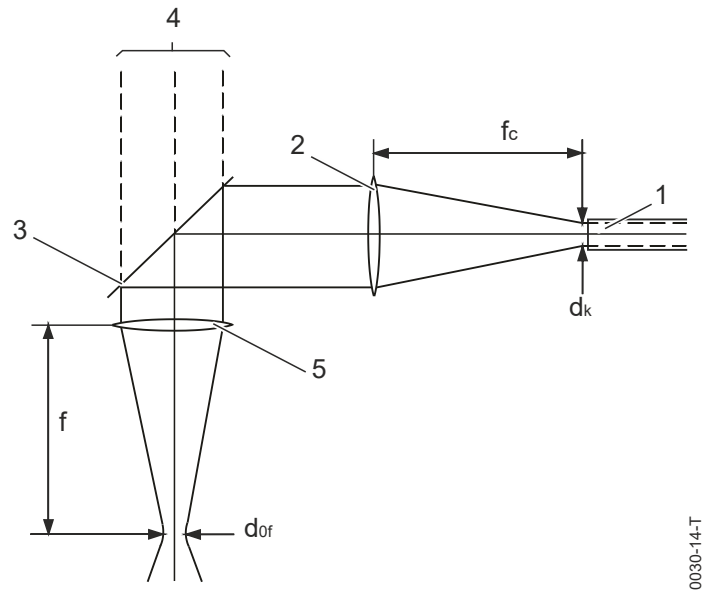

1	Fiber	4	Observation
2	Collimation lens	5	Focusing lens
3	Deflection mirror		

Beam guideway in a 90° focusing optics Fig. 3-36

Focal diameter

The diameter of the focused laser beam at the smallest point (waist) is called focal diameter d_{0f}.

$$d_{0f} = \frac{f}{f_c} \cdot d_k$$

SG-02002

Fig. 3-37

d_{0f}: focal diameter [mm]

f: Focal length of lens [mm]

f_C Focal length of collimation [mm]

d_k: Fiber core diameter [mm]

Aspect ratio

The ratio of lens focal length f to collimation focal length f_c is named aspect ratio β.

$$\beta = \frac{f}{f_c}$$

SR-90254

Fig. 3-38

β: aspect ratio

β > 1 means that $d_{0f} > d_k$

β = 1 means that $d_{0f} = d_k$

β < 1 means that $d_{0f} < d_k$

Depth of focus

The length of the optical axis in the focus where the focal diameter d_{0f} changes only negligibly, is called depth of focus.

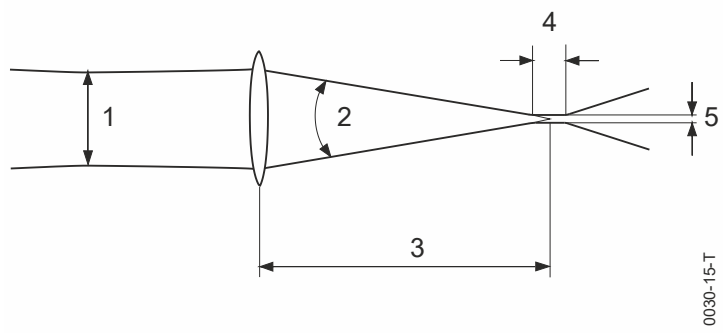

1 d_0 = Beam waist diameter [mm], θ = divergence [rad]

2 θ_f = Divergence of the focused beam [rad]

3 f = Focal length of lens [mm]

4 z_s = Depth of focus [mm]

5 d_{0f} = Focal diameter [mm]

Depth of focus of a laser beam Fig. 3-39

Effect on the practical use

The highest power density of the laser beam is achieved in the focal point. Position and diameter of the focal point as well as the depth of focus depend on the focal length of the used lens.

Short focal lengths of lens show the following advantages compared with long focal lengths of lens:

- The focal diameter is smaller. This results in a higher power density in the focal point.

Long focal lengths of lens show the following advantages compared with short focal lengths of lens:

- Larger working distance. By this, less soiling of the lens protection as usually. The power density on the processing point will drop with increasing soiling. This diminishes the processing quality.
- The depth of focus is longer. This allows a larger working distance range without changed machining results.

The processing task, the selected components and thus the beam guideway of the laser light determine the working distance between focusing optics and the workpiece.

As a result of the given focal diameter and depth of focus, the working distance must be maintained, if high-quality results are to be achieved.

Best processing results are achieved

- with a focusing optics tuned to the processing task at hand.
- with a correctly adjusted working distance.
- with clean optical components
- with workpieces which are clean at the processing point.

3.2 Beam guideway in the observation optics

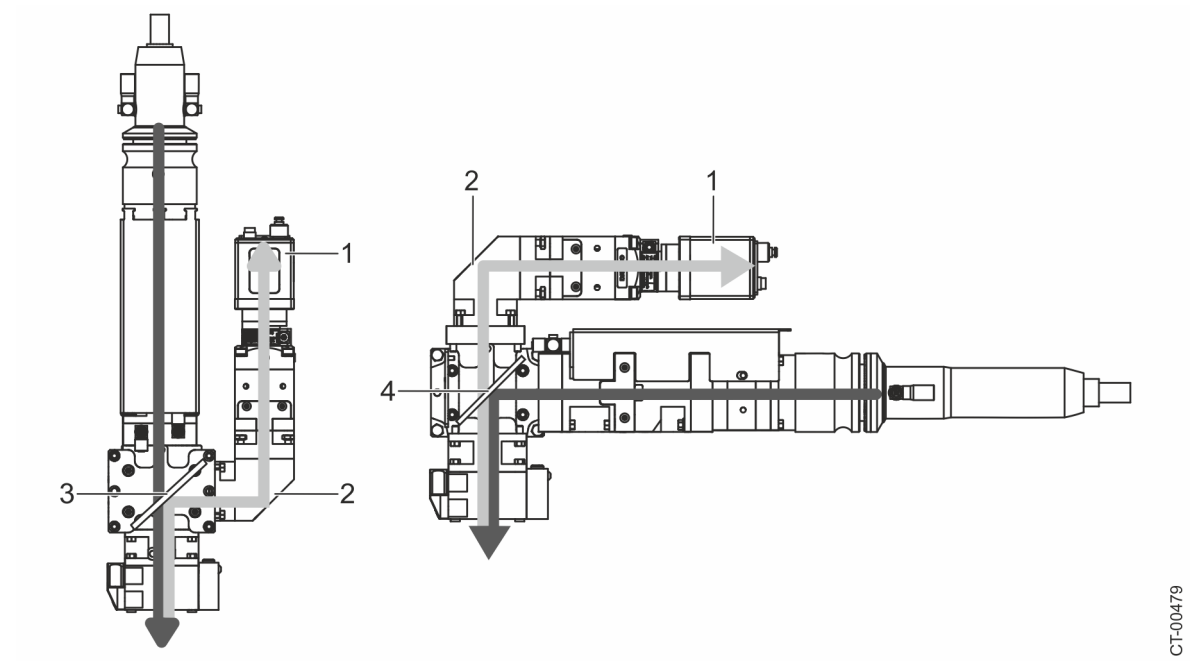

1 camera
2 Observation optics
3 Separating plate
4 Deflection mirror

0° focusing optics (left) and 90° focusing optics (right) Fig. 3-40

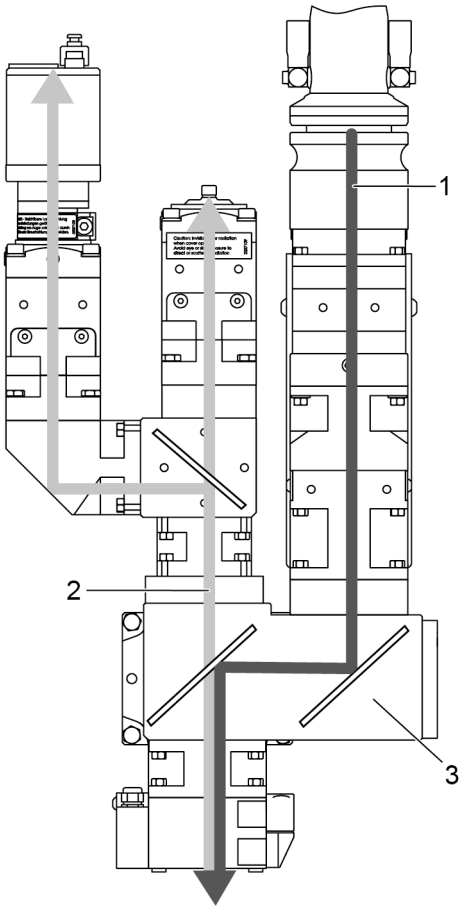

1 Laser beam path
2 Beam path for observation optics
3 2 x 90° double deflection

Beam path through the 2 x 90° double deflection Fig. 3-41

For viewing and adjustment of the workpiece, a separating plate or a deflection mirror is inserted into the beam path.

Focusing optics 0°

For a 0° focusing optics for monitoring, a separating plate is used. This separating plate is permeable to light with the wavelength of the laser beam. The separating plate deflects the visible light coming from the workpiece through the lens into the viewing optics.

Focusing optics 90°

For 90° focusing optics, a deflection mirror is used for viewing. This deflection mirror is permeable to visible light. Thus, it allows the visible light coming from the workpiece through the lens to enter the viewing optics. The deflection mirror deflects the light of the laser beam to the lens.

Focusing optics with 2 x 90° double deflection

For focusing optics with 2 x 90° double deflection, two deflection mirrors are used for viewing. These deflection mirrors are permeable to visible light. Thus, they allow the visible light coming

from the workpiece to enter the viewing optics via the lens. The deflection mirrors deflect the light of the laser beam to the lens.

Protective filter The observation optics is provided with a protective filter to avoid laser light being emitted from the observation optics.

camera A camera can be attached to the observation optics.

The camera is used to adjust and watch the machining point also during the machining process.

The Operator's manual of the manufacturer contains information on the camera.

Cross hairs If a camera is used to adjust the viewing optics, an additional cross-hairs generator is required.

Setting of the focusing optics is described in the chapter "Setting work" .

3.3 Connection to the laser device

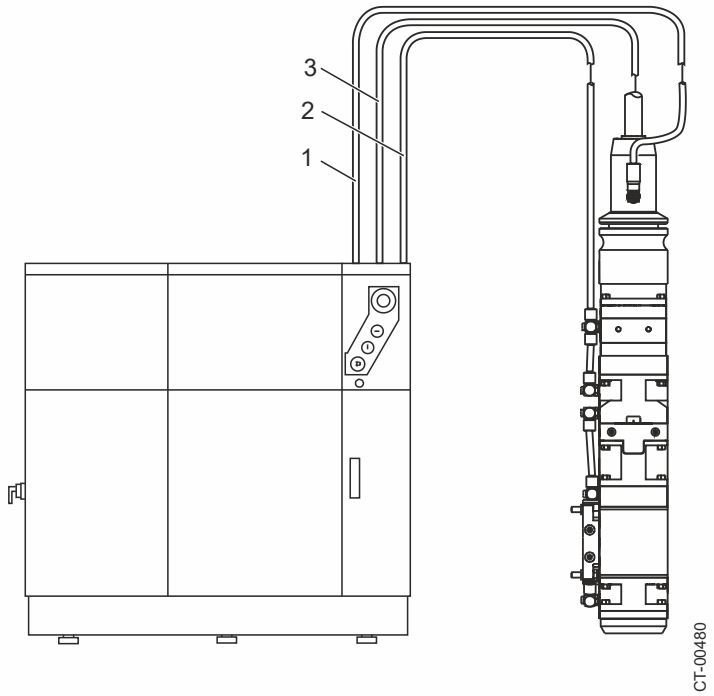

1 Cooling water hose – return
2 Cooling water hose – supply
3 Laser light cable (LLK-D)

Focusing optics BEO D50 Basic, connected to a laser device (diagram) Fig. 3-42

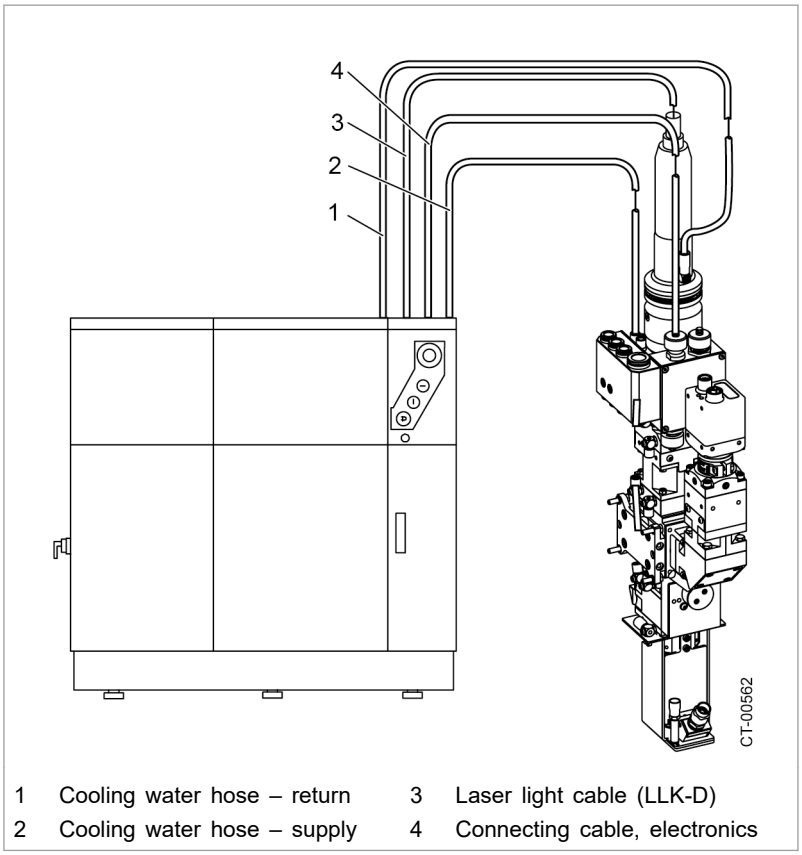

Focusing optics BEO D50 Smart, connected to a laser device (diagram) Fig. 3-43

Laser light

Laser light is generated in the laser device and coupled into the laser light cable.

Monitoring functions of the BEO D50 Smart

For focusing optics BEO D50 Smart, the flow of the process media (purging gas, MVE gas, shielding gas and the crossjet pressure) can be monitored within adjustable limits and the temperature of the cooling water can be monitored within preset limits via the gas monitoring module and cooling water monitoring module.

During operation, the protective glass monitoring module also monitors the degree of contamination of the protective glass. To do this, the protective glass monitoring module communicates wirelessly with the data memory on the protective glass using RFID.

In addition, the scattered light on the LLK protective glass is monitored.

For more information on this topic, please refer to the software manual of the controlled focusing optics.

Chapter 4

Adjustment work

	General notes on adjustment work	4-3
1	**Aligning the focusing optics**	**4-4**
1.1	Aligning the focusing optics	4-4
2	**Adjusting the focal position**	**4-6**
2.1	Setting zero position	4-7
2.2	Taking objects out of the beam guideway	4-8
2.3	Adjusting the working distance	4-8
	Determining the focal position with the working laser	4-10
	Measuring the working distance	4-11
	Adjusting the focal position by means of the line laser	4-13
2.4	Adjusting the distance caliper	4-13
2.5	Adjusting the line laser	4-14
2.6	Defocusing the focusing optics	4-16

2.7	Adjusting the focusing optics in the x-y direction.	4-19
	Adjusting the focusing optics, zero position	4-20
	Adjusting the focusing optics to a new workpiece	4-20
3	**Adjusting the dual focus optics**	**4-21**
3.1	Turning the focal points around the center axis	4-21
3.2	Adjusting the splitting ratio	4-22
4	**Adjusting the Gen 2 observation optics**	**4-24**
4.1	Adjusting the picture sharpness of the camera	4-24
4.2	Adjusting the cross hairs	4-25
4.3	Setting the fiber end of the pyrometer	4-26

General notes on adjustment work

The following conditions must be fulfilled:

- The focusing optics must have been installed in the system.
- The focusing optics must have been connected correctly to the laser device by way of the LLK.
- The necessary safety equipment must have been installed and must be ready for operation.
- Suitable laser safety glasses must be at hand.
- There must be enough samples for the commissioning procedure. A suitable workpiece holder for the samples must be provided.

1. Aligning the focusing optics

In almost all applications the optical axis of the focusing optics is aligned with the processing plane.

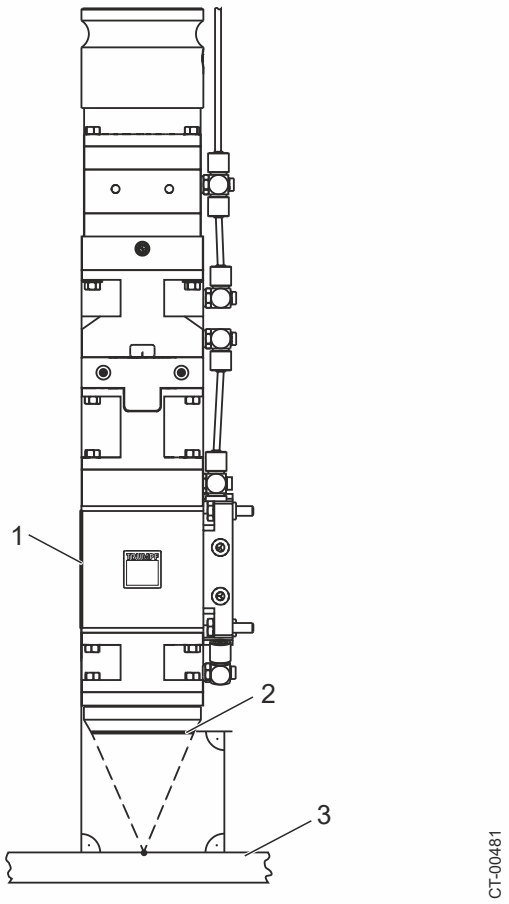

1	Guide edge on the connecting piece	3	Workpiece
2	Guide edge on the lens protection		

Aligning the 0° focusing optics with the processing plane Fig. 4-1

The 0° and 90° focusing optics have to be aligned in the same way.

1.1 Aligning the focusing optics

➢ Align the guide edge of the connecting piece (1) vertically to the workpiece (3) (see "Fig. 4-1", pg. 4-4).

or

- Align the guide edge of the lens protection (2) in parallel to the workpiece (3) (see "Fig. 4-1", pg. 4-4).

Tip

If welding is performed with strong back reflections, the focusing optics should be set at an angle so that the back reflections pass by the focusing optics. An external absorber plate may also be required.

2. Adjusting the focal position

The highest power density of the laser beam is achieved in the focal point. The position and the diameter of the focal point as well as the depth of focus depend on:

- the focal length of the used lens.
- the core diameter LLC.
- the focal length of collimation.

The deviation of the focal position Δz from the workpiece surface has an important effect on the geometry of the weld point or welding seam. The power density of the laser beam on the workpiece depends on the position of the focal plane in relation to the workpiece surface.

The focal position can be changed as follows:

- Change of the clearance between focusing optics and workpiece.
- Displacement of the collimation lens by using the adjustment ring on the collimation unit of the focusing optics .

  Displacing the focal point by shifting the collimation lens in + or – direction is called defocusing.

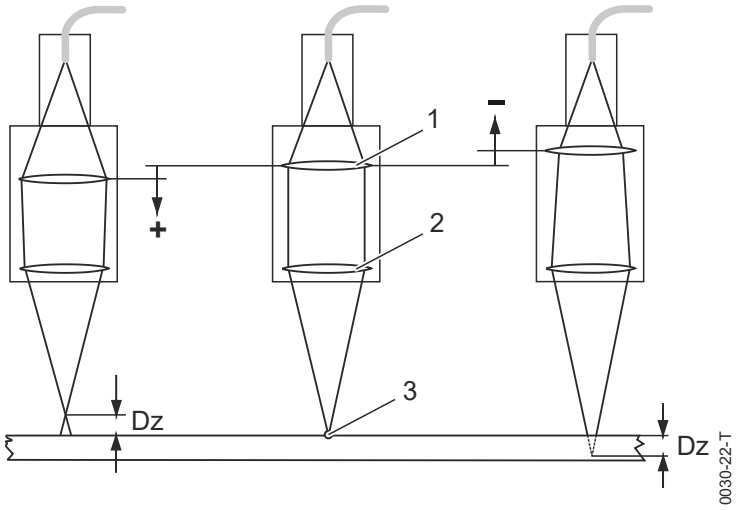

1 Collimation lens
2 Lens
3 Focal point

Effect of the collimation lens on the focal position Fig. 4-2

2.1 Setting zero position

Please see the following sections:

- Taking objects out of the beam guideway.
- Adjusting the working distance.
- Defocusing the focusing optics.
- Adjusting the focusing optics in the x-y direction..

With zero position and distance B between the focusing optics and the workpiece adjusted according to the dimensional drawings, the focal plane lies exactly on the workpiece surface.

Means, Tools, Materials

- Allen key, 90°, AF2

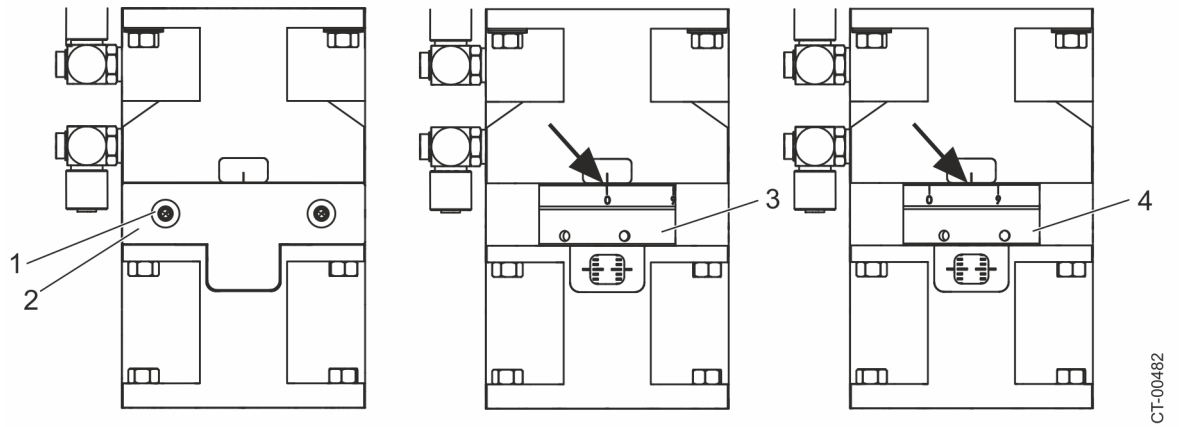

1 Screws
2 Cover sheet
3 Adjusting ring in zero position
4 Adjusting ring in defocused position

Fig. 4-3

1. Loosen screws (1) and remove the cover (2) from both sides.
2. Turn the setting ring (3) by hand or with the hexagonal socket screwdriver.

   Tip

   The focus length set can be read off the scale on the setting ring and below it. The backlash must be taken into account when turning the setting ring.

3. Refit the cover (2) and tighten the screws (1).

The focusing optics is now in the desired focusing position.

2.2 Taking objects out of the beam guideway

The laser beam exits the lens conically and achieves its highest power density in the focal point.

Objects in the beam path cause

- increased scattered light at the machining point.
- risk of overheating of the object projecting into the beam path.
- backscattering of the laser light into the focusing optics. This causes additional heating-up of the focusing optics and may result in damage to the focusing optics and the laser device.
- reduced power density in the focal point.

Condition

- The connected laser device has been switched off and secured against renewed switching on, e.g. by means of a shackle padlock.

or

- The light path to the focusing optics is blocked.

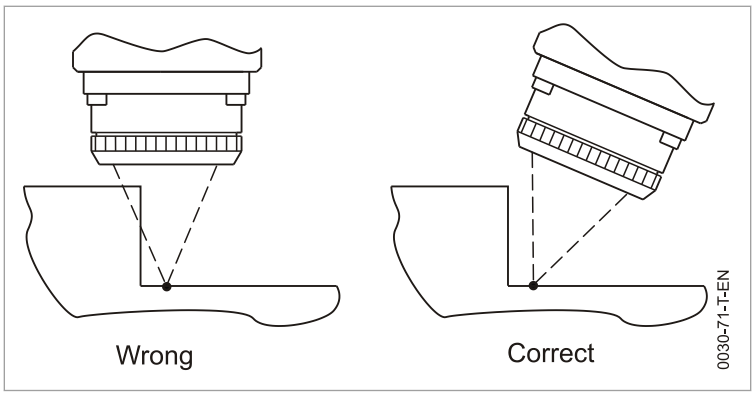

Fig. 4-4

➢ Remove all objects located in the beam guideway or projecting into it.

2.3 Adjusting the working distance

For adjusting the working distance, the focal position of the focusing optics must be known.

The focal position must be determined anew if:

- the focusing optics has been replaced.
- the clearance between the lens and workpiece has changed.

Method	Explanations
with camera	The working distance is changed until the workpiece surface is sharply defined. **Note** This method is only possible if the camera is adjusted correctly.
according to dimensional drawing of the focusing optics	Adjust the working distance according to distance B (see dimensional drawing of the optics used). **Note** The collimator must be in zero position.
with working laser	Small weld points are applied with different working distances to an anodized aluminum sheet. The smallest spot diameter represents the working distance at which the focal point is on the workpiece.
with the pilot laser of the laser device and the line laser	Change the working distance until the projected line of the line laser coincides exactly with the point of the pilot laser. **Note** The collimator must be in zero position.

Methods for determining the focal position Tab. 4-1

Distance to the focal plane

Distance B given in the dimensional drawing indicates the vertical distance from the lowermost edge of the focusing optics to the focal plane.

Working distance

The working distance indicates the vertical distance from the lowermost edge of the focusing optics to the workpiece.

The dimension for the working distance varies according to the version of the focusing optics:

- Focusing optics without crossjet: Distance between lower edge of lens protection or end plate and workpiece.
- Focusing optics with crossjet: Distance between lower edge of crossjet and workpiece.

Note

If, e.g. for focusing optics the distance to the workpiece is to be measured exactly in the centre of the protective glass, the distance from lower edge of the lens protection to the protective glass has to be added to the working distance between the lower edge of the lens protection and the workpiece.

Determining the focal position with the working laser

Conditions

- The focusing optics is connected to a laser device.
- The laser device has been turned on.

⚠ WARNING

If the laser beam exit and the processing point are not placed in a protective cover, your eyes and your skin may be exposed to laser light!

Laser light can burn your skin or irreparably damage your eyes.

- ➢ Do not put your hands between focusing optics and workpiece while laser light is emitted.
- ➢ Wear laser glasses suitable for the wavelength of the laser light.

The two tables below contain guideline values to be used when setting the parameters for CW lasers and pulsed laser devices for determining the focal position at a focal length of f200 with the working laser.

Focal length of lens	Pulse duration	Power
200 mm	50 ms	0.30 kW

Guide values for CW lasers Tab. 4-2

Focal length of lens	Pulse duration	Power
200 mm	0.8 ms	0.70 kW

Guide values for pulsed lasers Tab. 4-3

The material number of the test plate is specified in the list of wear parts in the chapter "Maintenance" (see "Wearing parts", pg. 5-5).

1. Set the collimation unit of the focusing optics into zero position .

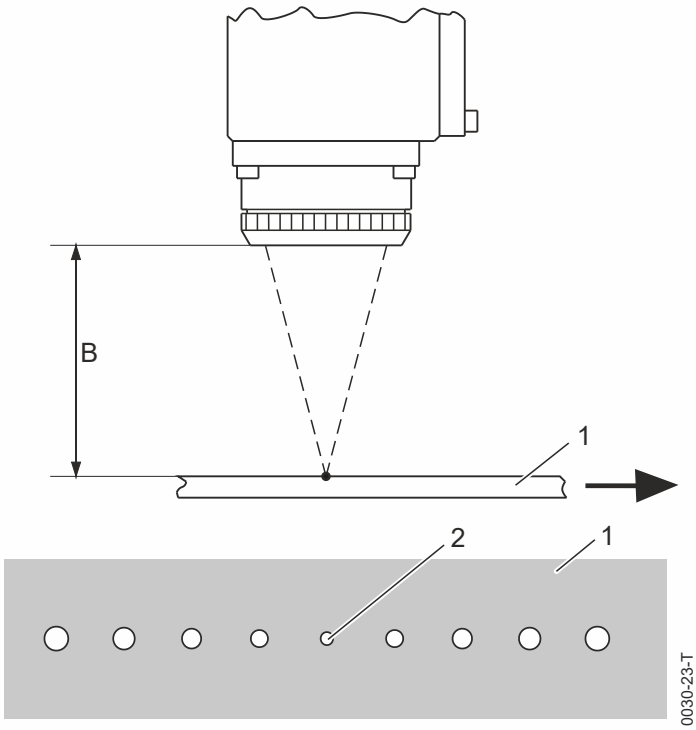

1 Anodized aluminum sheet
2 Smallest weld point
B Space from lower edge of lens protection to focal plane

Determining the focal position with the working laser Fig. 4-5

2. Put an anodized aluminum sheet (1) on the working table.
3. Adjust distance B according to the dimensional drawing.
4. Apply several weld points on the anodized aluminum sheet. There should be a space of approx. 6 mm between the weld points.

   With a focal length of lens of 150 mm to 300 mm, change the distance between objective and workpiece from -3 mm to +3 mm in increments of 0.5 mm.

With the smallest weld point (2), the focal point is directly on the aluminum sheet. This identifies the focal position and, thus, the actual distance between the lower edge of the lens protection and the focal point for this focusing optics.

Measuring the working distance

The working distance indicates the vertical distance from the lowermost edge of the focusing optics to the workpiece.

If, e.g. for a welding optics the distance to the workpiece should be measured exactly in the middle of the protective glass, the space from lower edge of the lens protection to the protective glass has to be added to the working distance between lower edge of the lens protection and the workpiece.

Condition

- The connected laser device has been switched off and secured against renewed switching on, e.g. by means of a shackle padlock.

or

- The light path to the focusing optics is blocked.

Note

Do not use pointed measuring instruments for measurements on the protective glass to avoid scratches.

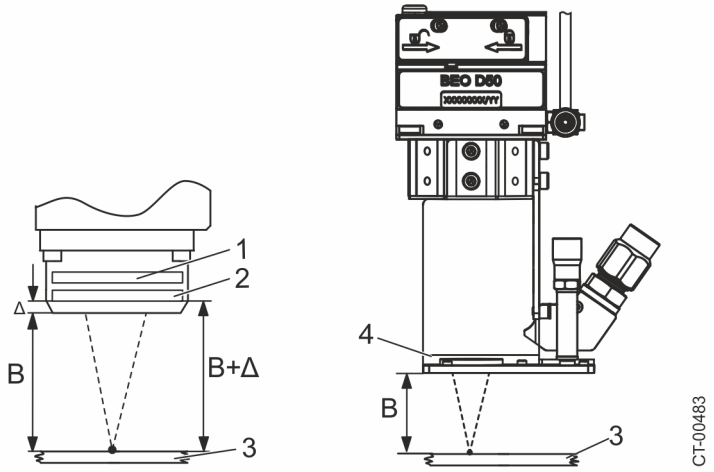

1	Protective glass	4	Spatter guard
2	Protective glass	B	Space from lower edge of lens protection to focal plane
3	Workpiece	Δ	Space from lower edge of lens protection to lower edge of protective glass

Working distance of a welding optics Fig. 4-6

➢ Measure the distance between the lower edge of the focusing optics and the workpiece by means of a suitable measuring instrument. Inside calipers can be used as measuring instrument.

Tip

After having determined the correct working distance for your focusing optics, adjust a caliper to the corresponding length . This allows you to quickly set or check the distance from the workpiece.

Adjusting the focal position by means of the line laser

Condition

- The line laser has been adjusted correctly (see "Adjusting the line laser", pg. 4-14).

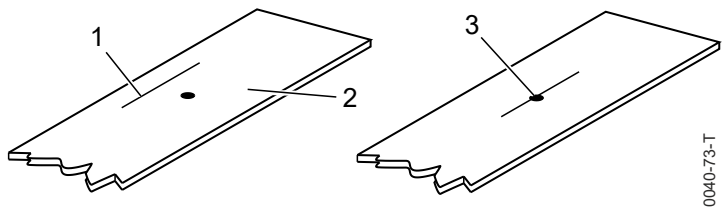

1	Line of the line laser (focal plane not on the workpiece surface)	3	Line of the line laser is located on the point of the pilot laser
2	Workpiece		

Light of the pilot laser and the line laser — Fig. 4-7

⚠ WARNING

Your eyes may be exposed to the laser light of the pilot laser.

The laser light of the pilot laser can irreparably damage your eyes.

➢ Wear adjustment goggles that will protect the laser light wavelength of 635 nm used.

1. Switch on pilot laser.
2. Connect the electrical connection cable to the line laser.
3. Change the working distance until the line of the line laser coincides exactly with the point of the pilot laser (3).

   The focal plane of the working laser is now exactly on the workpiece surface.

2.4 Adjusting the distance caliper

TRUMPF can provide a clearance gauge adjustable from 69 to 235 mm as an accessory (material number 1345675).

Means, Tools, Materials

- Slotted screwdriver

Caliper L69-235

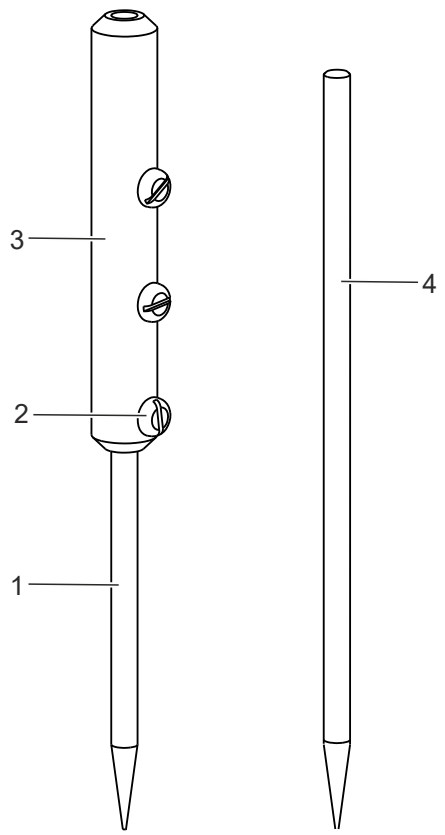

1	Tip 1 (69 – 128 mm)	3	Sleeve
2	Locking screw (3 x)	4	Tip 2 (178 – 235 mm)

Fig. 4-8

1. Loosen the clamping screws (2).
2. If necessary, shorten the tip 2 (4) to the desired length.
3. Insert the appropriate tip 1 or 2 (1 or 4) into the sleeve (3).
4. Position the caliper between the focusing optics and workpiece at an easily accessible point where the working distance can be adjusted or checked.
5. Screw in the clamping screws by hand and tighten them carefully with a screwdriver.

2.5 Adjusting the line laser

Condition

- The working distance has been set correctly (e.g. by welding a focus series on anodized aluminum sheet).

Means, Tools, Materials

- Allen key

Switch on line laser

⚠ WARNING

Your eyes may be exposed to the laser light of the pilot laser.

The laser light of the pilot laser can irreparably damage your eyes.

➢ Wear adjustment goggles that will protect the laser light wavelength of 635 nm used.

1. Switch on the pilot laser of the shutter switch.

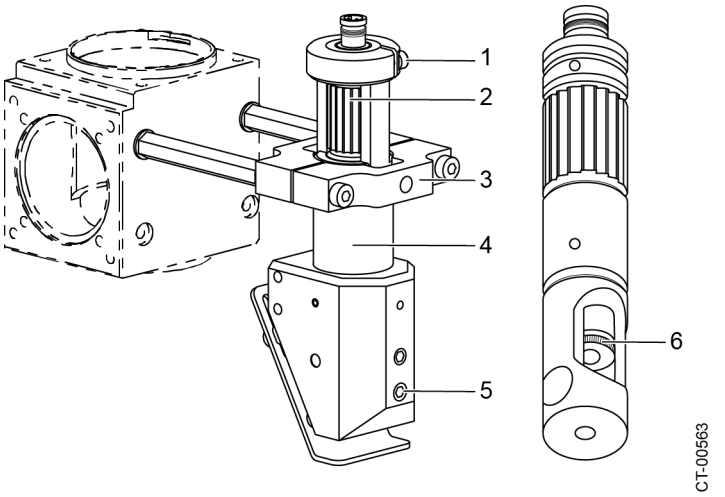

1	Clamping screw	4	Line laser
2	Laser module	5	Adjusting screw (linear adjustment)
3	Clamping holder, line laser	6	Knurl for axial adjustment

Line laser and removed laser module — Fig. 4-9

2. Switch on the line laser.

Focusing the laser line

3. Undo the clamping screw (1).
4. Remove the black, anodized laser module (2).
5. Focus the laser line at the working distance using the stainless steel knurl (in the bottom part of the laser module).
6. Insert the laser module again and tighten the clamping screw.

Linear adjustment of the laser line

7. Adjust the laser line by turning the adjusting screw (5) such that this lies exactly on the dot of the pilot laser.

Axial adjustment of the laser line

8. Undo the clamping screw (1).
9. Axially adjust the laser line by turning the knurl (2).
10. Swivel the line laser such that the line of the line laser lies exactly in the desired orientation.

11. Tighten the clamping screw again.
12. Switch off the line laser.

This completes the adjustment of the line laser.

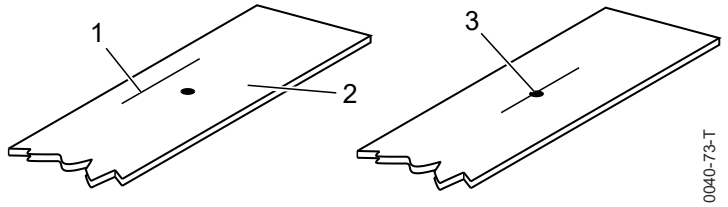

1	Line of the line laser (focal plane not on the workpiece surface)	3	Line of the line laser is located on the point of the pilot laser
2	Workpiece		

Light of the pilot laser and the line laser Fig. 4-10

Tip

The easiest way of line laser adjustment is when using a camera for viewing.

The height of the components can also be measured using the line laser and current VisionLine version; see also the operator's manual "VisionLine", doc. no.: 22-50-12-A0-CR.

2.6 Defocusing the focusing optics

The machining task can require a movement of the focal point into or away from the workpiece.

The laser beam can be defocused by moving the focal point above the surface of the workpiece or inside the workpiece:

- without changing the working distance between the focusing optics and the workpiece.
- without changing the picture sharpness of the camera.

Scales

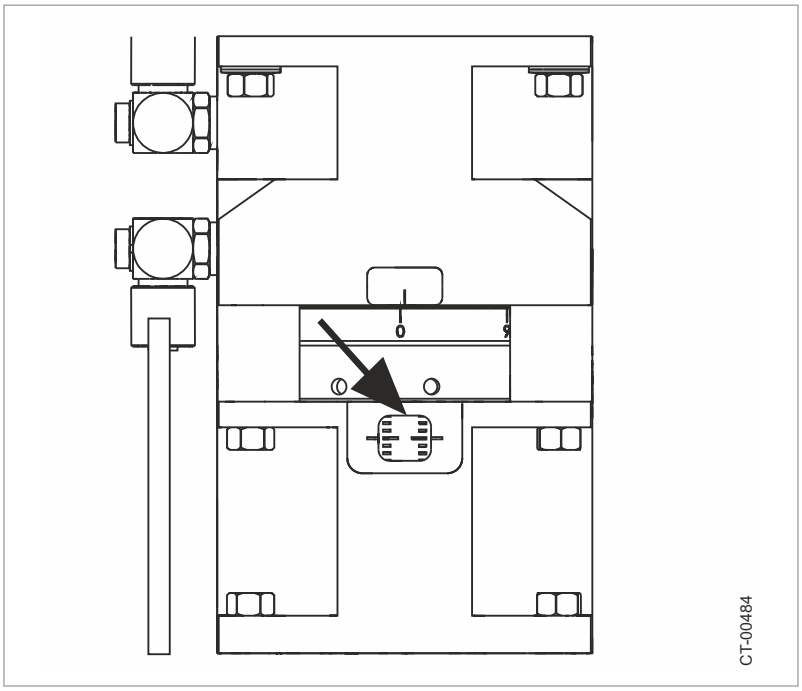

Scale on the collimation unit Fig. 4-11

The focus length set can be read off the scales on top of and below the setting ring. The shift in focal position Δz can be read in mm on the scale (arrow).

Once the focal length of the lens is known, you can determine approximate displacement of the focal position Δz as follows:

Focal lengths of lens

$$\Delta z = \frac{f^2}{f_c^{\,2}} \cdot \Delta s$$

SG-02005

Fig. 4-12

f	Focal length of lens	[mm]
f_c	Focal length of collimation	[mm]
Δs	Adjustment range of the set ring	[mm]
Δz	Displacement of the focal position	[mm]

Tab. 4-4

The maximum adjustment range of the set ring is ± 5 mm.

Condition

- The connected laser device has been switched off and secured against renewed switching on, e.g. by means of a shackle padlock.

or

- The light path to the focusing optics is blocked.

Means, Tools, Materials

- Allen key, 90°, AF2
- Tool for adjusting the collimation: arbor or pin with diameter 2.1 mm, alternatively hexagonal socket screwdriver AF2

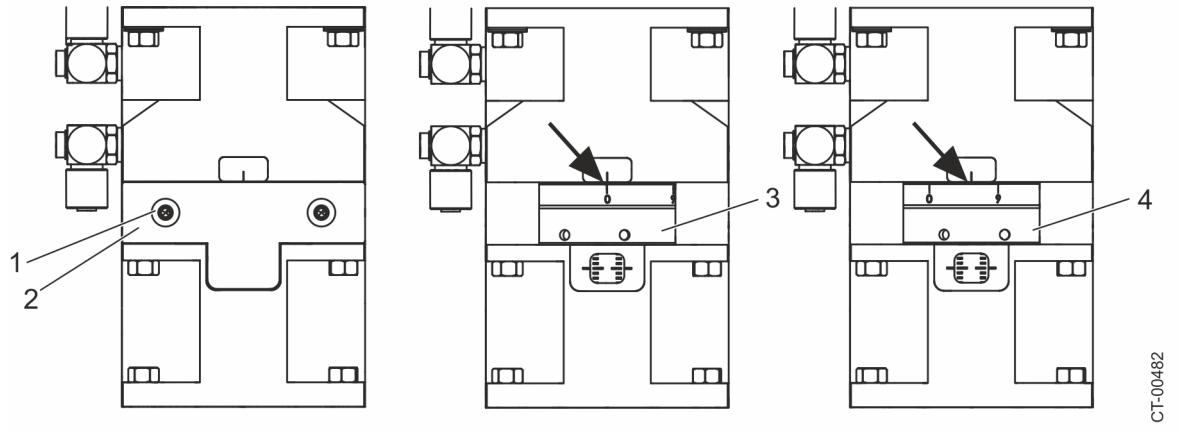

1 Screws
2 Cover sheet
3 Adjusting ring in zero position
4 Adjusting ring in defocused position

Fig. 4-13

1. Undo the screws (1) and dismantle the covers (2) on both sides.
2. Turn the setting ring (3) by hand or with the mandrel included in delivery or with the size 2 mm hexagonal socket screwdriver.

   The focal point is thus shifted towards the workpiece or away from the workpiece . The value set can be read on the scale.

   Note

   Perform a complete turn of the set collar to shift the collimation lens by 1 mm (=1 scale division).
3. Refit the cover (2) and tighten the screws (1).

2.7 Adjusting the focusing optics in the x-y direction.

The x-y direction of the laser beam in the focusing optics is set by TRUMPF on delivery as specified in the dimensional drawing.

Note

After installation of the focusing optics in a system environment, the zero point for the x-y direction has to be determined.

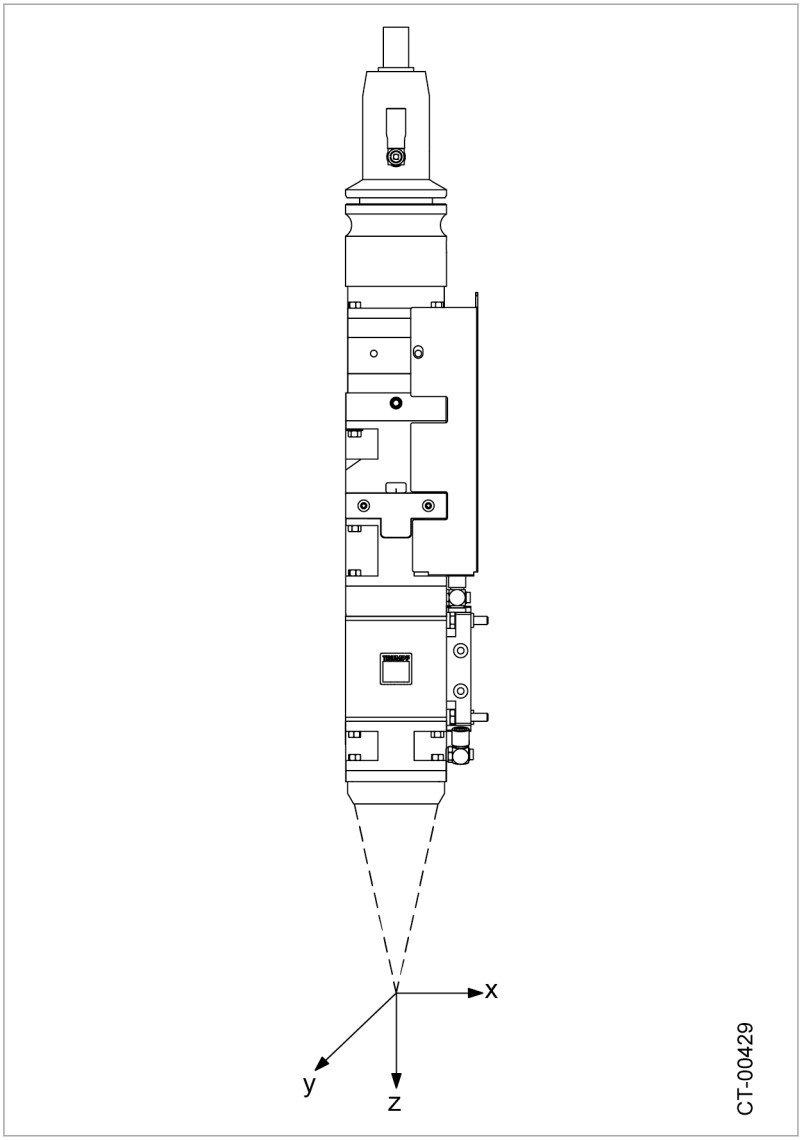

Focusing optics, x-y direction Fig. 4-14

⚠ WARNING

If the laser beam exit and the processing point are not placed in a protective cover, your eyes and your skin may be exposed to laser light!

Laser light can burn your skin or irreparably damage your eyes.

- Do not put your hands between focusing optics and workpiece while laser light is emitted.
- Wear laser glasses suitable for the wavelength of the laser light.

Adjusting the focusing optics, zero position

Note

After installation of the focusing optics in a system environment, the zero point for the x-y direction has to be determined.

1. Set the weld point.
2. Define the coordinates of this weld point as new zero position for the X-Y direction in the system.
3. Align the crosshairs of the camera to the center of the weld point.

Adjusting the focusing optics to a new workpiece

Note

Adjusting the focusing optics by means of the pilot laser of the laser device is not as exactly as the adjustment by means of the cross hairs, since the pilot laser generates a relatively large spot on the workpiece. The pilot laser is not suitable for adjusting the working distance.

- Approach desired point on the workpiece in X-Y direction:
  - by means of the pilot laser in the laser device

  or

  - by means of the cross hairs of the observation optics

  or

  - by means of the coordinate values for this point determined from the system data.

3. Adjusting the dual focus optics

3.1 Turning the focal points around the center axis

Condition

- The connected laser device has been switched off and secured against renewed switching on, e.g. by means of a shackle padlock.

or

- The light path to the focusing optics is blocked.

Means, Tools, Materials

- Internal hexagon screwdriver, X20
- Allen key, 2 mm
- Arbor, 2.0 mm
- Security key, Torx X10, with borehole

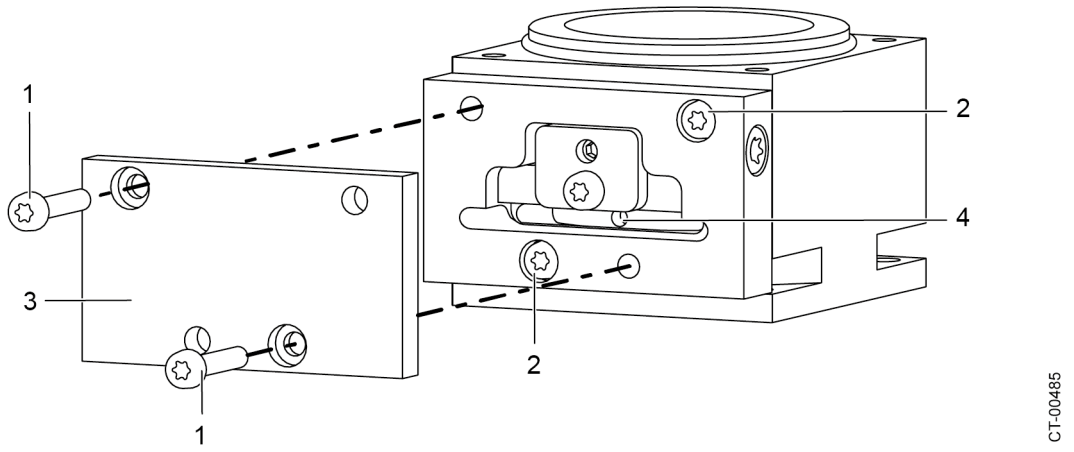

1	Screws (2 x) for undoing the cover plate	3	Cover plate	4	Hole
2	Screws (2 x) in boreholes				

Fig. 4-15

1. Undo two screws (1) and remove the cover plate (3) and seal.

   The screws in the boreholes (2) must not be undone.

   The bifocal insert can be rotated freely.

2. Insert the arbor into borehole (4) of the bifocal insert and turn the bifocal insert to the desired position.

3.2 Adjusting the splitting ratio

Means, Tools, Materials

- Allen key, 2°mm

Note

The bifocal optics is preset and does not normally need to be adjusted.

Adjusting part ratio Y

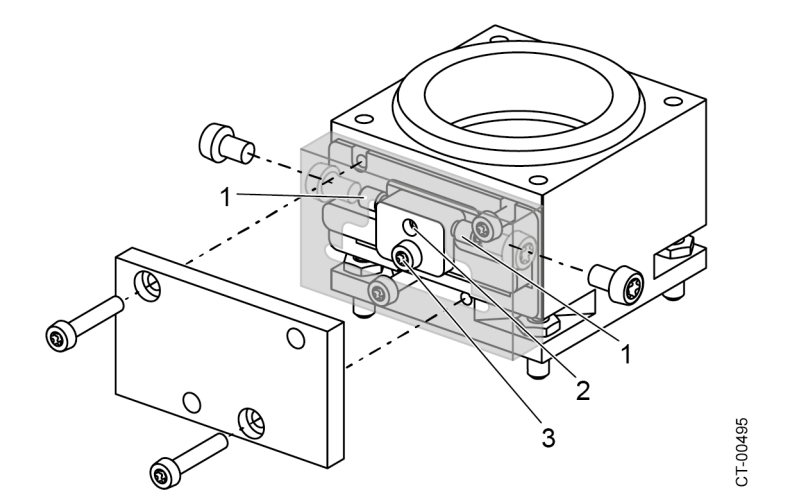

1 Set screws
2 Adjusting screw
3 Adjusting screw

Fig. 4-16

1. Using a welding test, check whether:
   - the position of the focal points with respect to the middle axis is correct.
   - the two weld points or seams have the same size and depth.
2. Remove the cover and seal.
3. Turn adjusting screws (2 and 3) counter to each another to set the part relation.
4. Finally, lock the adjusting screws against one another.

Adjusting part relation X

5. Two screws unscrewed via the set screws (1).
6. Turn the two set screws (1) simultaneously.
7. Finally lock the set screws against one another.
8. Using a welding test, check whether:
   - the position of the focal points with respect to the middle axis is correct.
   - the two weld points or seams have the same size and depth.

The position of the focal points with respect to the centre axis is not correct or the two weld points or weld seams are not equally large or deep.

➢ Repeat the setting procedures.

4. Adjusting the Gen 2 observation optics

The operations which can be carried out at Gen 2 observation optics are described in this section. You will learn how to:

- adjust the picture sharpness or the camera.
- adjust the cross-hairs.
- adjust the fiber end of the pyrometer.

4.1 Adjusting the picture sharpness of the camera

The picture sharpness of the camera has been adjusted ex works. Carry out the following steps to improve the picture sharpness, if necessary.

Condition

- The connected laser device has been switched off and secured against renewed switching on, e.g. by means of a shackle padlock.

or

- The light path to the focusing optics is blocked.

Means, Tools, Materials

- Allen key, 90°, 1.5 mm
- Allen key, 90°, 2.5 mm

Adjusting the distance to the workpiece

Note

The viewing optics must be set with correctly adjusted distance.

1. Adjusting the distance to the workpiece (see "Adjusting the working distance", pg. 4-8).

Adjusting the picture sharpness

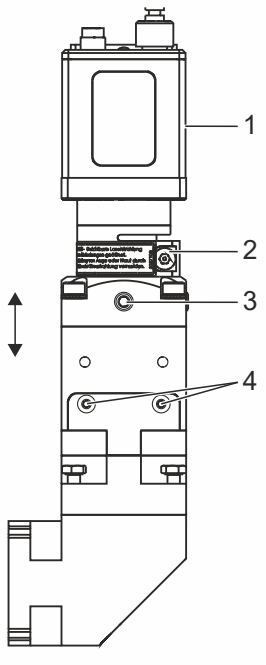

1	camera	3	Adjustment screw (2x)
2	Safety screw	4	Allen screws (2x)

Fastening the camera Fig. 4-17

2. Undo the two Allen screws (4) and remove the cover plate.
3. Turn the setting ring below by hand or with a hexagonal socket screwdriver ≤ AF2.
4. watch the monitor with the camera picture
5. If the image of the processing point is sharp, reinstall the cover and tighten the screws.

4.2 Adjusting the cross hairs

The cross hairs of the focusing optics have been adjusted to the center ex works. Readjust the cross hairs when maladjusted.

Condition

- The connected laser device has been switched off and secured against renewed switching on, e.g. by means of a shackle padlock.

or

- The light path to the focusing optics is blocked.

Means, Tools, Materials

- Allen key, 90°, 2.0 mm
- Allen key, 90°, 2.5 mm

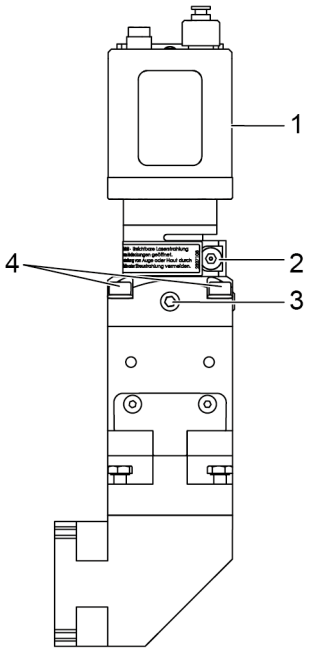

1	camera	3	Adjustment screw (2x)
2	Safety screw	4	Allen screws (4x)

Adjusting the cross-hairs Fig. 4-18

1. Undo the Allen screws (4) slightly.
2. Use the adjusting screws (3) to make adjustments in the X and Y direction.
3. Tighten the Allen screws (4).

The cross hairs are fixed in the center of the picture.

Tip

The crosshairs can also be moved digitally via the panel PC, see "VisionLine" Operator's manual, doc. no.: 22-50-12-A0-CR.

4.3 Setting the fiber end of the pyrometer

If you are using a pyrometer, you can adjust its fiber end.

Adjusting the pyrometer spot in x-y direction

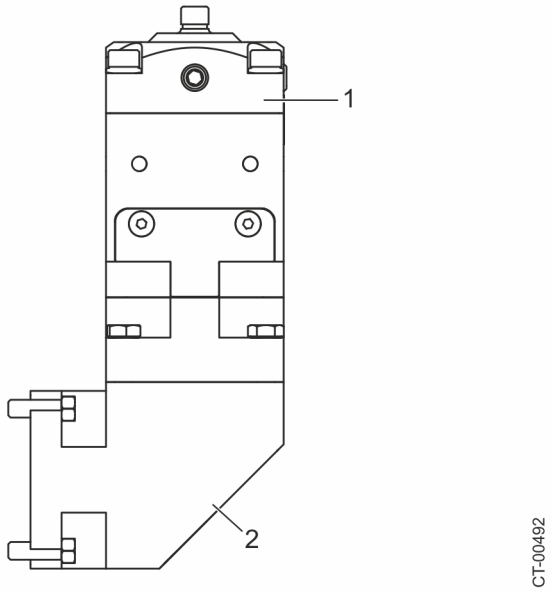

1 Pyrometer outlet 2 Deflection

Pyrometer outlet Fig. 4-19

1. To adjust the pyrometer spot in x-y direction, proceed as when adjusting the crosshairs (see "Adjusting the cross hairs", pg. 4-25).

Optimizing the signal strength of the thermal radiation

2. To optimize the signal strength of the thermal radiation, which is coupled into the pyrometer fiber, it may be necessary to adjust the intermediate layer of the coupling lens.

   Proceed as when setting the image sharpness of the camera (see "Adjusting the picture sharpness of the camera", pg. 4-24).

Chapter 5

Maintenance

1	**General notes**	**5-3**
2	**Material**	**5-5**
2.1	Wearing parts	5-5
2.2	Optics cleaning kit	5-5
2.3	Consumables	5-6
2.4	Disposal	5-6
2.5	Tools and additional equipment	5-7
3	**Laser light cable (LLK)**	**5-9**
3.1	Disconnecting the LLK from the focusing optics	5-9
4	**Welding optics**	**5-12**
4.1	Cleaning the protective glass in the lens protection (process protective glass)	5-13
4.2	Changing the protective glass of the lens protection (process protective glass)	5-14

4.3	Replacing the protective glass of the lens protection (additional protective glass)	5-15
4.4	Cleaning the protective glass in the process protective glass cassette	5-18
4.5	Changing the protective class of the process protective glass cassette	5-19
4.6	Changing the protective glass of the objective protective glass cassette	5-23
4.7	Cleaning the splash guard	5-27
4.8	Mounting the crossjet in a different position	5-27
4.9	Cleaning the attachment parts	5-29
4.10	Replacing the sensor block	5-29
4.11	Replacing the protective glass monitoring module	5-30
4.12	Cooling water	5-31
	Draining cooling water from the focusing optics	5-31

1. General notes

The correct maintenance is an important precondition for trouble-free operation of the focusing optics and for the quality of the working result.

The focusing optics has been designed to require little maintenance.

Regularly check the condition of your focusing optics. Carry out maintenance work as a precautionary measure when you detect signs of wear or dirt.

Check regularly the laser light cable for damaged sheathing. The laser light cable must be replaced in case of a damaged sheathing.

Pay attention to the monitoring messages the connected laser device indicates on the screen. They may give information on necessary maintenance work.

⚠ DANGER

While carrying out maintenance work on the laser device you may have to deal with parts dangerous for persons and material.

Improper or incautious procedures can cause injuries or damages to property.

- Maintenance work may be carried out by trained personnel only.
- Any work at the electrical equipment may only be performed by a skilled electrician.
- Always observe the warning notes in these maintenance instructions.
- Switch off the laser device before starting maintenance work.

Note

The connected laser device must be switched on during maintenance work only if it is necessary for maintenance or control purposes. You will be informed about this in the corresponding sections of this manual.

⚠ CAUTION

Treated, deionized water (DI water) is used as cooling water!

Cooling water can be aggressive against skin and textiles.

- Do not bring the cooling water in eyes, nose or mouth.
- Avoid that cooling water comes into contact with your clothing.
- The cooling water can be washed off with tap water.
- Wear protective gloves, safety glasses and protective clothing.

Maintenance of the focusing optics

When processing material with a laser, particles or vapors may be emitted from the surfaces of the workpieces, which will result in a fog and a soiling on the protective glass or on other parts of the focusing optics. A soiled protective glass diminishes the laser power on the workpiece.

Regularly check the condition of the protective glass. Clean the protective glass and other parts of the focusing optics if they are visibly soiled.

The protective glass has to be replaced if it shows soil particles burnt-in, which cannot be removed by cleaning it.

Checking the hose connections

Pressurized gas or pneumatic hoses may burst or become loose. Gas escapes under high pressure as a result of uncontrolled swinging around.

⚠ WARNING

Risk of injury if pneumatic hoses burst or become loose.

Eye, skin injuries and hearing damage.

Startled responses by people in the surrounding area.

- Check the hose connections are secured on a regular basis, correcting this if necessary.
- Check the condition of the hoses on a regular basis and replace any hoses if necessary.

2. Material

2.1 Wearing parts

	Designation	Material No.
Lens protection	Protective glass D39x1.5 S09 T950 Q	2294542
Protective glass cassette Basic	Protective glass D39x1.5 S09 T950 Q	2294542
	Process protective glass cassette T950 D50	2356839
	Objective protective glass cassette T950 D50	2356874
	Flap with grooved ring	2337347
Protective glass cassette Smart	Protective glass D39x1.5 S09 T950 Q RFID	2358665
	Process protective glass cassette T950 RFID D50	2356840
	Objective protective glass cassette T950 RFID D50	2356875
	Flap with grooved ring	2337347

Tab. 5-1

2.2 Optics cleaning kit

TRUMPF recommends using the optics cleaning kit available for cleaning of optical components.

The optics cleaning kit can be obtained from TRUMPF. It has the material no. 779603.

Fig. 5-1

2.3 Consumables

For maintenance work on the focusing optics, you need the following consumables:

- Lens cleaning paper or swabs to clean optical glasses (available from the photo shops).
- Methanol as cleaning agent for optical glasses.
- Isopropyl alcohol as a cleaning agent for plastic e.g. sealing rings.

⚠ CAUTION

Methanol is inflammable and toxic when you inhale or swallow it.

- ➢ Keep methanol away from open fire and other ignition sources.
- ➢ Do not smoke.
- ➢ Supply sufficient fresh air.
- ➢ Do not inhale methanol vapor.

2.4 Disposal

Some maintenance work will produce waste material that must be disposed of. Instructions for an appropriate disposal are given in the corresponding sections.

Note

The instructions for disposal of waste material are recommendations, derived from regulations applied at the place and time when these operating instructions were issued. You as the operating company, however, are obliged to inform yourself about the regulations concerning waste disposal and to proceed accordingly.

Unless the regulations applicable do no stipulate otherwise, the waste material is to be disposed of as follows:

O-rings, Sealing rings	Residual waste
Lens cleaning paper	Residual waste
Swab	Residual waste
Cooling water without additives	Sewage system
Cooling water with additives	Disposal in accordance with the applicable wastewater disposal regulations for the region

Tab. 5-2

2.5 Tools and additional equipment

Symbol	Designation	Dimensions, other data
	Slotted screwdriver	5 mm
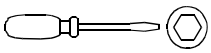	Allen key, straight	2 x 1.5 mm for cutting optics, 4 mm
SR-99005	Allen key, 90°	AF2, AF2.5, AF3
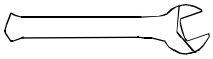	Open-end wrench	5.5 mm
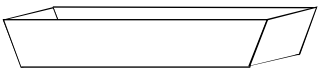	Collecting tank	for cooling water
	Cleaning cloth	to wipe up drained water
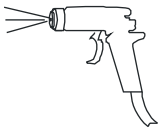	Blow-out gun for compressed air	
	Protective gloves	rubber, to be worn when handling deionized water
	Steel brush	to remove material deposits on the crossjet and the shielding gas supplies
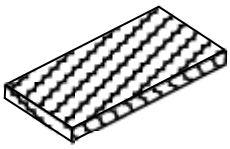	Polishing fleece	to remove material deposits on the crossjet and the shielding gas supplies

Symbol	Designation	Dimensions, other data
TE-01607	Optics cleaning kit(see "Optics cleaning kit", pg. 5-5)	contains tools and consumables for maintenance work on the focusing optics
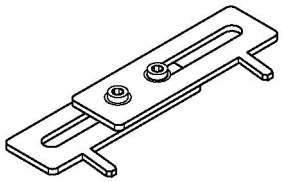	Key for optics	welding optics accessory required for replacement of the protective glass

Tools and auxiliary tools for maintenance Tab. 5-3

3. Laser light cable (LLK)

3.1 Disconnecting the LLK from the focusing optics

If you need to separate the LLK from the focusing optics, the same rules as for connecting apply: Avoid anything that poses a risk of soiling.

Conditions

- The focusing optics is mounted to the carrier. The LLK is still connected.
- The connected laser device has been switched off and secured against renewed switching on, e.g. by means of a shackle padlock.
- The focusing optics can be rotated on the carrier so that the shaft of the plug receptacle is horizontal or the focusing optics can be dismounted from the carrier with connected LLK and then put on a clean surface.

Means, Tools, Materials

- Adhesive PVC tape, 19 mm, material no.: 1420313
- Sealing plug for plug receptacle of the focusing optics
- Protective cap for LLK plug

NOTICE

Dirt in beam path!

LLK or focusing optics might get damaged.

- ➢ Leave openings on LLK and focusing optics unprotected as short as possible.
- ➢ Put the shaft of the plug receptacle in horizontal position.
- ➢ Do not touch optical surfaces.

1. If there is a protective sleeve, remove it.
2. Disconnect electrical cables and cooling water hoses from the focusing optics.

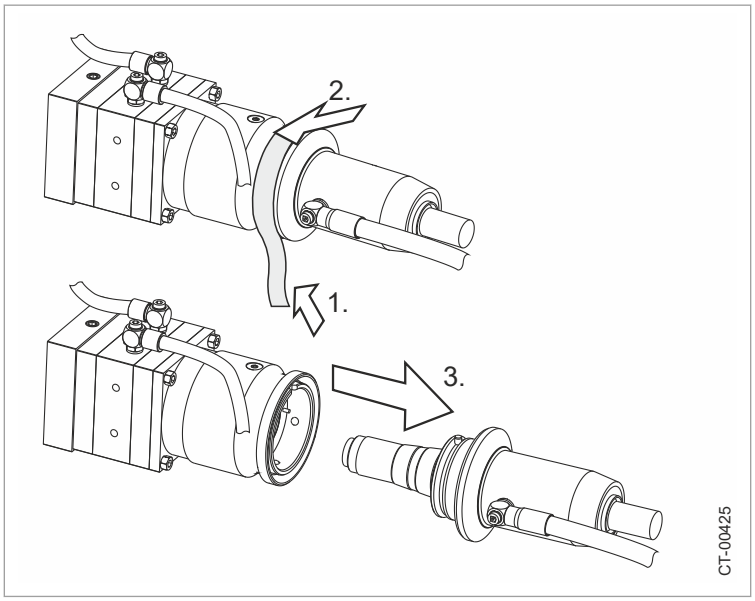

Dismounting the LLK plug Fig. 5-2

3. Loosen the adhesive tape from the joint (1).
4. Push sliding sleeve (2) towards the focusing optics until this engages.
5. Unplug the LLK plug from the plug receptacle of the focusing optics (3).

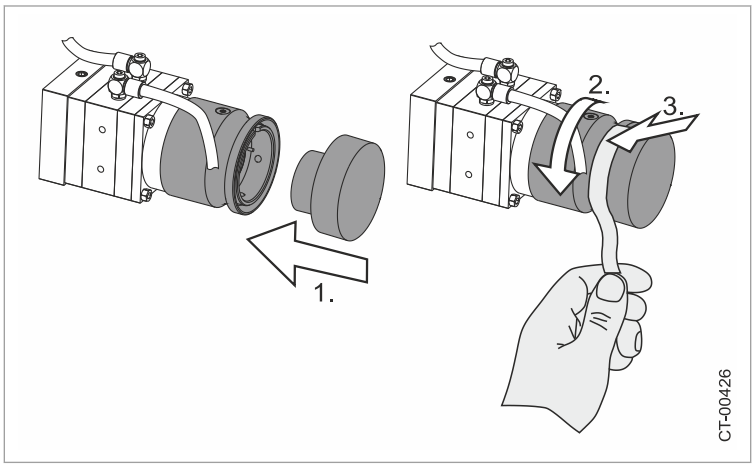

Mounting the sealing plug Fig. 5-3

6. **Immediately** plug the sealing plug into the plug receptacle (1) and put the protective cap on the LLK plug.
7. Turn the sliding sleeve 5° to the right until this locks.

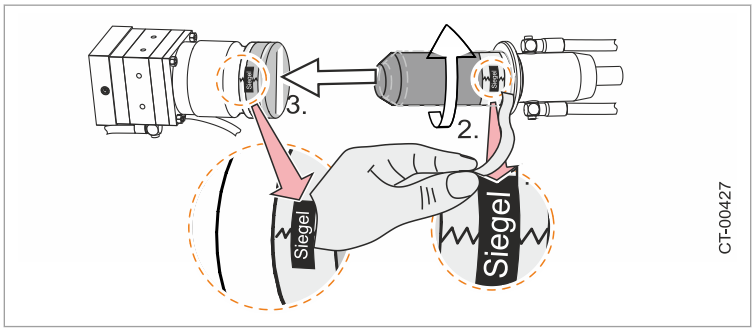

Fig. 5-4

8. If possible, adhere seal band to the beginning of the adhesive tape on focusing optics and LLK plug.

The focusing optics can now be handled separately from the LLK.

4. Welding optics

The lens is covered on the outside by a protective glass. The protective glass protects the lens against soiling by particles or material vapors formed during the welding process.

Clean the protective glass if:

- the welding results are affected negatively.
- the protective glass is dirty.

The process protective glass must be replaced if:

- dirt particles cannot be removed by cleaning (e.g. burnt-in particles).
- there are scratches on the protective glass.

The objective protective glass (additional protective glass) must be replaced if:

- the objective protective glass (additional protective glass) is dirty.
- there are scratches on the objective protective glass (additional protective glass).

Note

In the case of the BEO D50 Smart with a protective glass monitoring unit, a message is displayed on the laser control when the protective glass has to be replaced.

⚠ WARNING

Hot surfaces can burn your skin!

- ➢ Avoid contact with hot surfaces.
- ➢ Allow the focusing optics to cool down, before carrying out maintenance or cleaning work.

Note

Touch neither the protective glass nor the focusing lens with the fingers.

For cleaning, use methyl alcohol. Other cleaning agents can damage the O-ring or the coating of the protective glass.

4.1 Cleaning the protective glass in the lens protection (process protective glass)

Condition

- The connected laser device has been switched off and secured against renewed switching on, e.g. by means of a shackle padlock.

or

- The light path to the focusing optics is blocked.

Means, Tools, Materials

- Lens cleaning paper or swab
- Methanol
- Disposable gloves

Note

Touch neither the protective glass nor the focusing lens with the fingers.

For cleaning, use methyl alcohol. Other cleaning agents can damage the O-ring.

1. Soak the lens cleaning paper or a swab with methyl alcohol.
2. Slowly wipe across the protective glass until it is clean.

   or

   ➢ If the protective glass is so dirty that the impurities cannot be removed when installed, the protective glass must be removed for cleaning.

Note

Only one side of the protective glass may be used.

After cleaning the protective glass, never fit it into its holder with the cleaned side towards the lens. The cleaned surface contains residual contamination, which will vaporize when the laser operates and which may lead to damage (contaminants being burned in) to the lens.

Note

The protective glass will have to be replaced if it contains burnt-in dirt particles, which cannot be removed by cleaning.

4.2 Changing the protective glass of the lens protection (process protective glass)

Material numbers can be found in the consumable table (see "Wearing parts", pg. 5-5).

Condition

- The connected laser device has been switched off and secured against renewed switching on, e.g. by means of a shackle type connector.

or

- The light path to the focusing optics is blocked.

Means, Tools, Materials

- Key for optics
- New protective glass
- New O-ring (if required)
- Disposable gloves

Note

Touch neither the protective glass nor the focusing lens with the fingers.

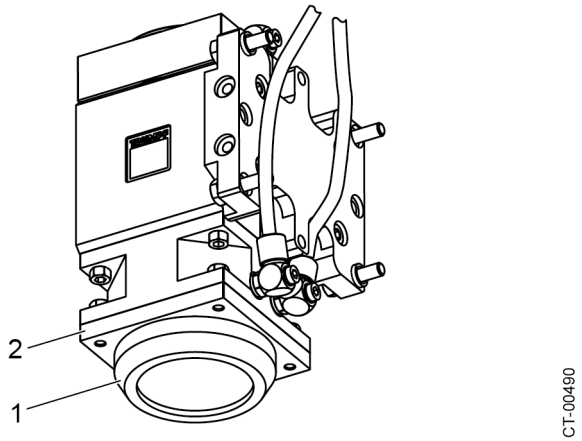

1 Lens protection 2 Lens protection receptacle

Removing the lens protection Fig. 5-5

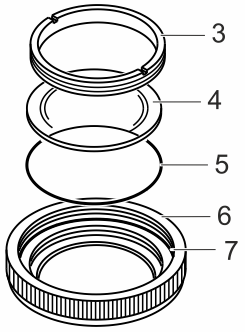

3	Retaining ring	6	protective glass holder
4	Protective glass	7	O-ring
5	O-ring		

Lens protection, components Fig. 5-6

Removing the protective glass

1. Screw off the lens protection (2) from the lens (2) counter-clockwise.
2. Cover the opening of the focusing optics in loaded environments (e.g. in case of oil mist or intense dust), until you reattach the lens protection.
3. Unscrew the retaining ring (3) using the optics key.
4. Take the protective glass (4) and O-ring (5) out of the protective glass holder (6).
5. If the O-ring (7) is damaged, replace it.
6. Soak lens cleaning paper or swab with methyl alcohol and clean the protective glass holder and the O-ring.
7. Insert O-rings in the protective glass holder. Make sure that the O-rings fit in the groove correctly.

Inserting a new protective glass

8. Insert a new protective glass in the protective glass holder.
9. Insert retaining ring and tighten it by using the key for the optics.
10. In the event of contamination, soak lens cleaning paper or a swab with methanol and slowly wipe over the objective protective glass.
11. Screw the lens protection clockwise on the lens.

4.3 Replacing the protective glass of the lens protection (additional protective glass)

Material numbers can be found in the consumable table (see "Wearing parts", pg. 5-5).

Condition

- The connected laser device has been switched off and secured against renewed switching on, e.g. by means of a shackle type connector.

or

- The light path to the focusing optics is blocked.

Means, Tools, Materials

- Key for optics
- New protective glass
- New O-ring (if required)
- Disposable gloves

Note

Touch neither the protective glass nor the focusing lens with the fingers.

Removing the protective glass

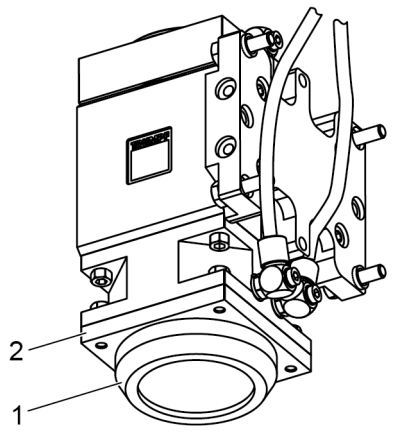

1 Lens protection 2 Lens protection receptacle

Removing the lens protection Fig. 5-7

1. Screw off the lens protection (1) from the lens (2) counter-clockwise.

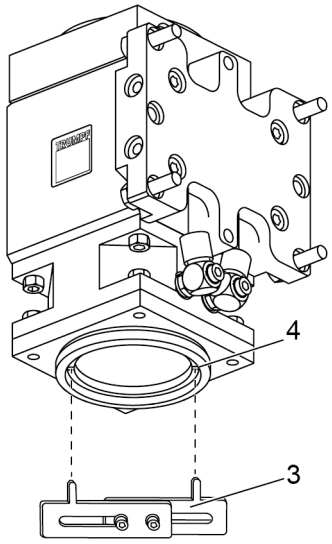

3 Key for optics 4 Holder ring

Removing the protective glass Fig. 5-8

2. Screw the retaining ring (4) with the key for optics (3) out of the lens protection receptacle.

Note

When replacing the protective glass, make sure that no dirt particles fall onto the focusing lens.

3. Cover the opening of the focusing optics in loaded environments (e.g. in case of oil mist or intense dust), until you reattach the lens protection.
4. Remove the O-ring and protective glass from the retaining ring.
5. When the O-ring is damaged, replace it.
6. Soak lens cleaning paper or swab with methyl alcohol and clean the protective glass holder and the O-ring.
7. Insert O-rings in the protective glass holder. Make sure that the O-rings fit in the groove correctly.

Inserting a new protective glass

8. Place a new protective glass and O-ring on the retaining ring.
9. Insert the retaining ring with protective glass and O-ring and screw firmly with the key for optics.
10. Screw the lens protection clockwise on the lens.

4.4 Cleaning the protective glass in the process protective glass cassette

Conditions

- The connected laser device has been switched off and secured against renewed switching on, e.g. by means of a shackle type connector.

or

- The light path to the focusing optics is blocked.
- The objective protective glass cassette is inserted.
- All gases (crossjet, MDE nozzle and purging gas) are turned off.

Means, Tools, Materials

- Lens cleaning paper or swab
- Methanol
- Disposable gloves

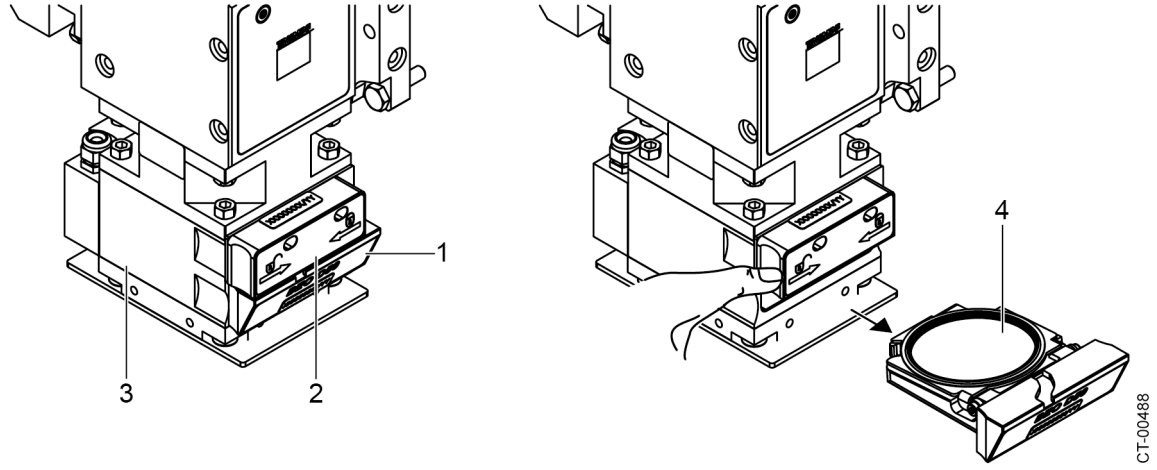

1 Process protective glass cassette
2 Slide
3 Cartridge holder
4 Protective glass

Fig. 5-9

1. Slide the slide (2) to the right to open it and remove the protective glass cassette (1).

Note

Do not touch the protective glass cassette with the fingers. Clean the protective glass in a clean environment.

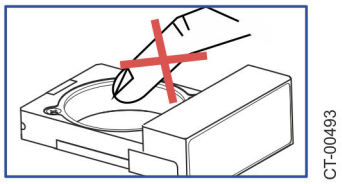

Fig. 5-10

2. Cover the opening of the protective glass cassette in contaminated environment (e.g. in case of oil mist or a very dusty environment), until you reinsert the protective glass cassette.
3. Soak the lens cleaning paper or a swab with methyl alcohol.
4. Slowly wipe across the protective glass until it is clean.
5. Push the protective glass cassette into the cassette receptacle until the slide engages audibly.

Note

Only one side of the protective glass may be used.

After cleaning the protective glass, never fit it into its holder with the cleaned side towards the lens. The cleaned surface contains residual contamination, which will vaporize when the laser operates and which may lead to damage (contaminants being burned in) to the lens.

Note

The protective glass will have to be replaced if it contains burnt-in dirt particles, which cannot be removed by cleaning.

Note

If a cleaned protective glass is used in another focusing optics BEO D50 Smart, deviations in the measured value of the protective glass contamination are to be expected.

4.5 Changing the protective class of the process protective glass cassette

Material numbers can be found in the consumable table (see "Wearing parts", pg. 5-5).

Conditions

- The connected laser device has been switched off and secured against renewed switching on, e.g. by means of a shackle type connector.

or

- The light path to the focusing optics is blocked.
- The objective protective glass cassette is inserted.
- All gases (crossjet, MDE nozzle and purging gas) are turned off.

Means, Tools, Materials

- New protective glass for process protective glass cassette
- New flap with grooved ring (if required)
- Lens cleaning paper or swab
- Methanol

Removing the protective glass

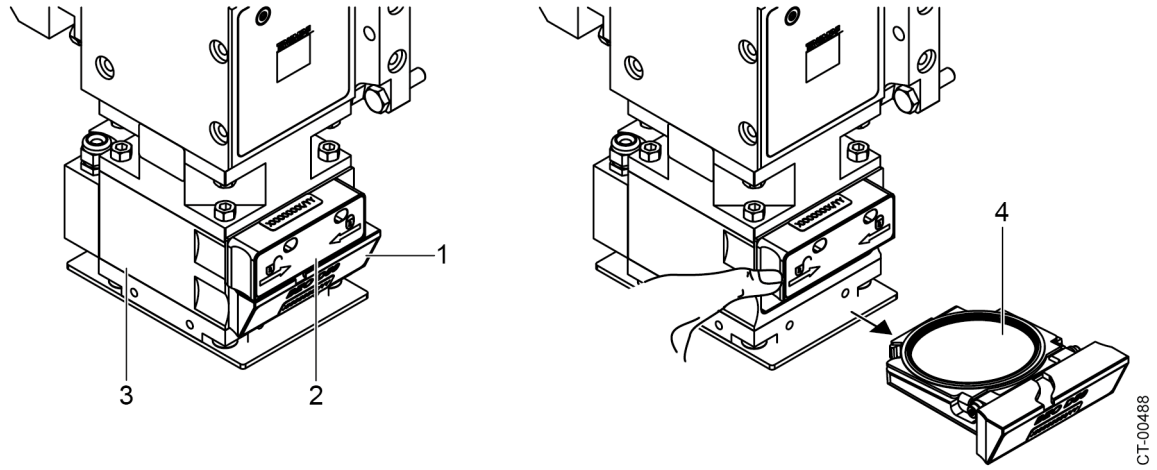

1 Process protective glass cassette
2 Slide
3 Cartridge holder
4 Protective glass

Fig. 5-11

1. Slide the slide (2) to the right to open it and remove the process protective glass cassette (1).
2. Cover the opening of the protective glass cassette in contaminated environment (e.g. in case of oil mist or a very dusty environment), until you reinsert the protective glass cassette.

Inserting new protective glass (BEO D50 Basic)

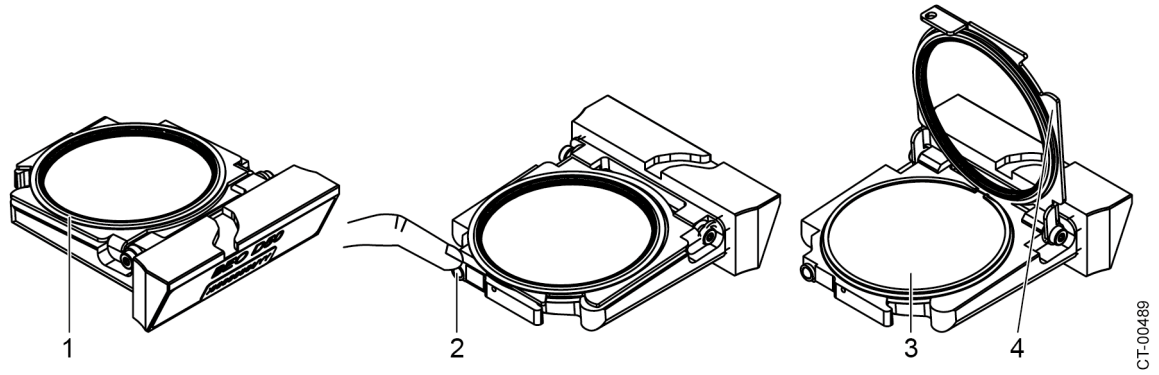

1 Flap with grooved ring
2 Tab for opening the flap
3 Protective glass
4 Flap with grooved ring (open)

Fig. 5-12

3. When the protective glass cassette is removed, move the tab (2) up with your index finger and open the flap.
4. Take the protective glass (3) out of the protective glass cassette.
5. Soak lens cleaning paper or swab with methyl alcohol and clean the protective glass cassette.
6. Clean the flap and grooved ring with methanol.

   If the grooved ring is damaged:

   - Replace flap with grooved ring.
   - To do this, loosen the fastening screws to the left and right on the flap.

   Note

   Do not touch the protective glass cassette with the fingers.

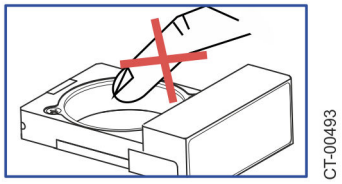

Fig. 5-13

7. Insert a new protective glass into the protective glass cassette.
8. Close the flap.
9. Change the objective protective glass.

   If soiled:

➢ Changing the objective protective glass (see "Changing the protective glass of the objective protective glass cassette", pg. 5-23).

10. Push the protective glass cassette into the cassette receptacle until the slide engages audibly.

Inserting new protective glass (BEO D50 Smart)

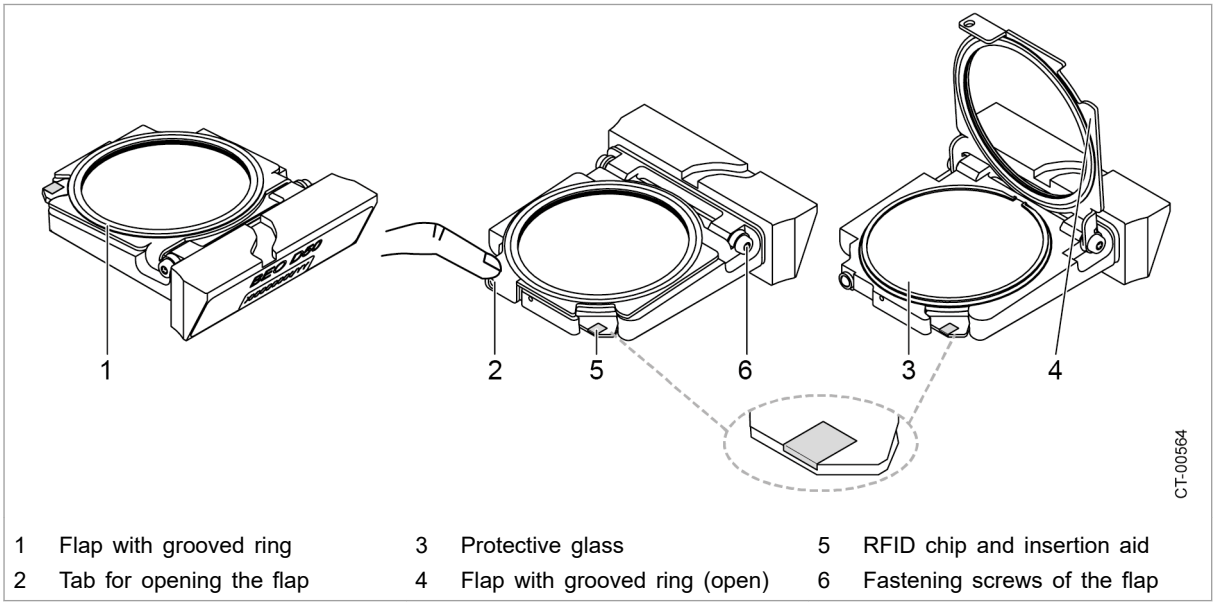

1	Flap with grooved ring	3	Protective glass	5	RFID chip and insertion aid
2	Tab for opening the flap	4	Flap with grooved ring (open)	6	Fastening screws of the flap

Changing the protective glass of the process protective glass cassette (BEO D50 Smart) Fig. 5-14

11. When the protective glass cassette is removed, move the tab (2) up with your index finger and open the flap.
12. Take the protective glass (3) out of the protective glass cassette.

Tip

The protective glass can be held using the insertion aid with RFID chip (5).

13. Soak lens cleaning paper or swab with methyl alcohol and clean the protective glass cassette.
14. Clean the flap and grooved ring with methanol.

If the grooved ring is damaged:

➢ Replace flap with grooved ring.
➢ To do this, loosen the fastening screws (6) to the left and right on the flap.

Note

Do not touch the protective glass cassette with the fingers.

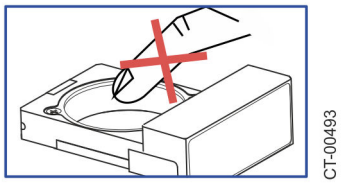

Fig. 5-15

15. Insert a new protective glass into the protective glass cassette.
16. Make sure that the insertion aid with RFID chip (5) is lying correctly in the provided recess at the corner of the cassette.
17. Close the flap.
18. Change the objective protective glass.

    If soiled:

    ➢ Changing the objective protective glass (see "Changing the protective glass of the objective protective glass cassette", pg. 5-23).
19. Push the protective glass cassette into the cassette receptacle until the slide engages audibly.

4.6 Changing the protective glass of the objective protective glass cassette

For the material numbers, refer to the wear part table (see "Wearing parts", pg. 5-5).

Conditions

- The connected laser device has been switched off and secured against renewed switching on, e.g. by means of a shackle type connector.

or

- The light path to the focusing optics is blocked.
- The process protective glass cassette is inserted.
- All gases (crossjet, MDE nozzle and purging gas) are turned off.

Means, Tools, Materials

- Allen key, 2.5 mm
- New protective glass for objective protective glass cassette
- New flap with grooved ring (if required)
- Lens cleaning paper or swab
- Methanol

Removing the objective protective glass cassette

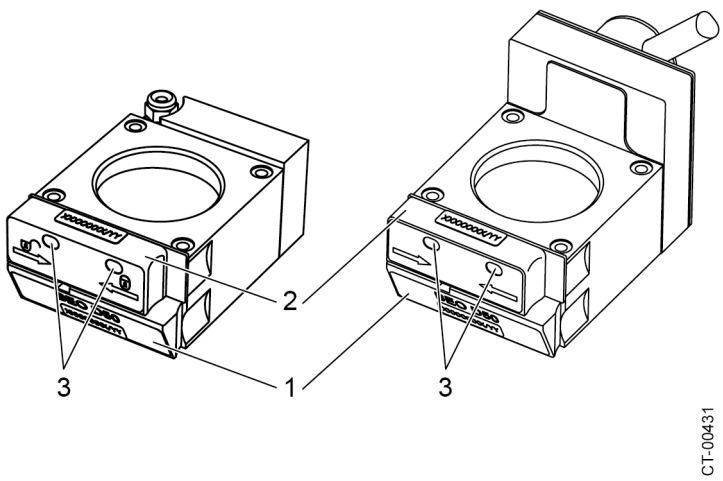

1 Process protective glass cassette
2 Objective protective glass cassette
3 Fixing screws

Objective protective glass cassette, BEO D50 Basic (left) and BEO D50 Smart (right) Fig. 5-16

1. Undo the fixing screws (3) and pull out the objective protective glass cassette (2).
2. Cover the opening of the protective glass cassette in contaminated environment (e.g. in case of oil mist or a very dusty environment), until you reinsert the protective glass cassette.

Inserting new protective glass (BEO D50 Basic)

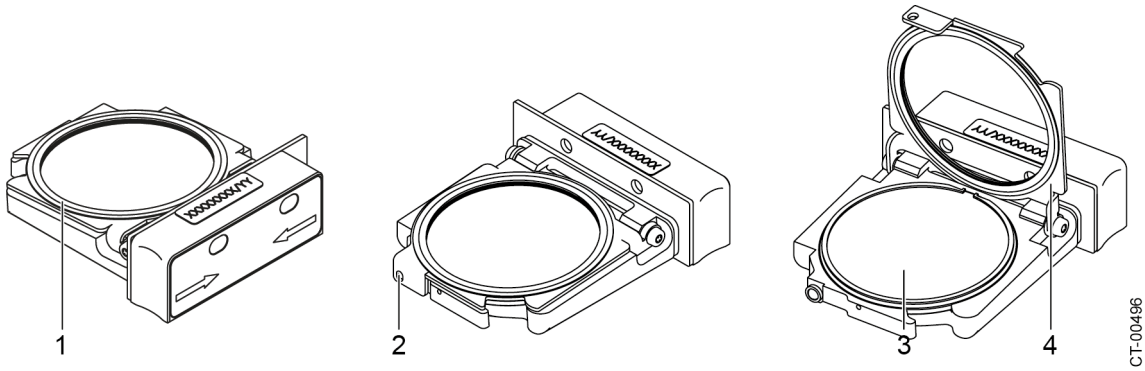

1 Flap with grooved ring
2 Tab for opening the flap
3 Protective glass
4 Flap with grooved ring (open)

Replacing the protective glass of the objective protective glass cassette (BEO D50 Basic) Fig. 5-17

3. When the objective glass cassette is removed, move the tab (2) up with your index finger and open the flap.
4. Remove the protective glass from the objective protective glass cassette.

5. Soak lens cleaning paper or swab with methyl alcohol and clean the objective protective glass cassette.
6. Clean the flap and grooved ring with methanol.

   If the grooved ring is damaged:

   - Replace flap with grooved ring.
   - To do this, loosen the fastening screws to the left and right on the flap.

   Note

   Do not touch the protective glass cassette with the fingers.

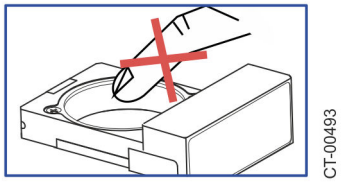

Fig. 5-18

7. Insert a new protective glass into the protective glass cassette.
8. Close the flap.
9. Push the protective glass cassette into the cassette receptacle and tighten the screws.

Inserting new protective glass (BEO D50 Smart)

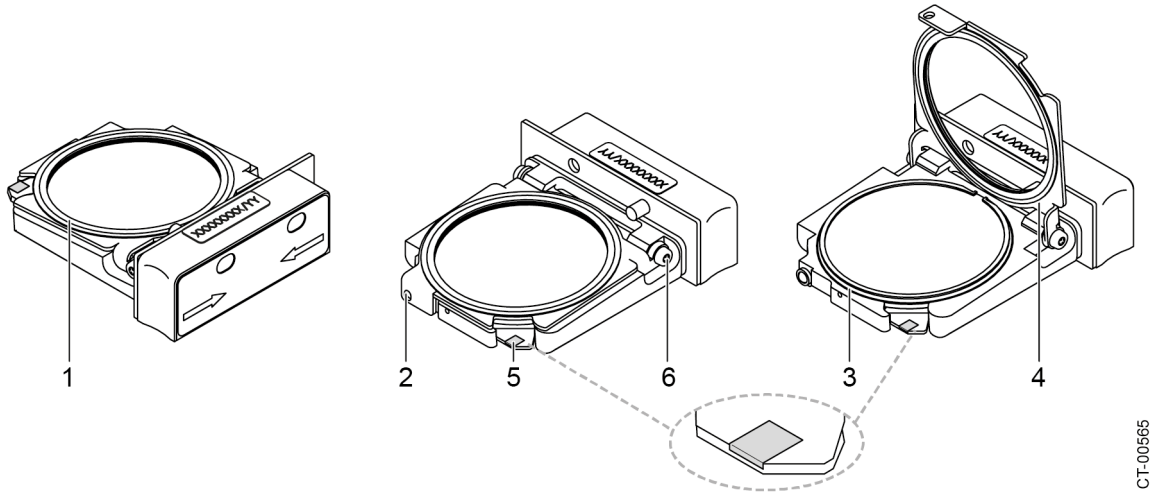

1	Flap with grooved ring	3	Protective glass	5	RFID chip and insertion aid
2	Tab for opening the flap	4	Flap with grooved ring (open)	6	Fastening screws of the flap

Replacing the protective glass of the objective protective glass cassette (BEO D50 Smart) Fig. 5-19

10. When the objective glass cassette is removed, move the tab (2) up with your index finger and open the flap.
11. Remove the protective glass from the objective protective glass cassette.

Tip

The protective glass can be held using the insertion aid with RFID chip (5).

12. Soak lens cleaning paper or swab with methyl alcohol and clean the objective protective glass cassette.
13. Clean the flap and grooved ring with methanol.

If the grooved ring is damaged:

- ➢ Replace flap with grooved ring.
- ➢ To do this, loosen the fastening screws (6) to the left and right on the flap.

Note

Do not touch the protective glass cassette with the fingers.

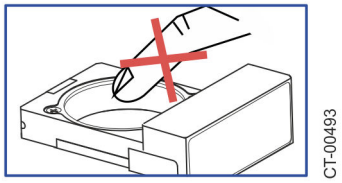

Fig. 5-20

14. Insert a new protective glass into the protective glass cassette.
15. Make sure that the insertion aid with RFID chip (5) is lying correctly in the provided recess at the corner of the cassette.
16. Close the flap.

Note

Once beaming is done for the first time with an objective protective glass, the protective glass is considered to be used. It can then no longer be used in other focusing optics as an objective protection glass.

Since the objective protective glass is usually only slightly contaminated, it can be reused as process protection glass, however.

17. Push the protective glass cassette into the cassette receptacle and tighten the screws.

4.7 Cleaning the splash guard

The crossjet is sealed from below by means of a spatter guard or the MDE nozzle body.

Material spatter from the melt are deposited onto these components during the welding process. Clean the spatter guard at regular intervals. The cleaning interval depends on the application and the resultant soiling.

Condition

- The connected laser device has been switched off and secured against renewed switching on, e.g. by means of a shackle padlock.

or

- The light path to the focusing optics is blocked.

Means, Tools, Materials

- Steel brush
- Polishing fleece

➢ Remove deposits on the spatter guard or the MDE nozzle body with a wire brush and polishing fleece.

If the spatter guard or the MDE nozzle body can no longer be cleaned or if it is damaged:

➢ Use a spare part. For material number, see spare parts catalogue.

4.8 Mounting the crossjet in a different position

The crossjet can be mounted on a cassette receptacle in one of 8 positions (8 x 45°) as required.

Condition

- The connected laser device has been switched off and secured against renewed switching on, e.g. by means of a shackle padlock.

or

- The light path to the focusing optics is blocked.

Means, Tools, Materials

- Allen key, 2.5 mm

⚠ CAUTION

Hot surfaces on the crossjet can burn your skin!

If the crossjet is installed incorrectly, the laser beam will hit the crossjet and can heat this up until it glows.

➢ Avoid contact with hot surfaces.

➢ Check whether the crossjet is correctly installed.

Disconnecting supply air hose from the crossjet

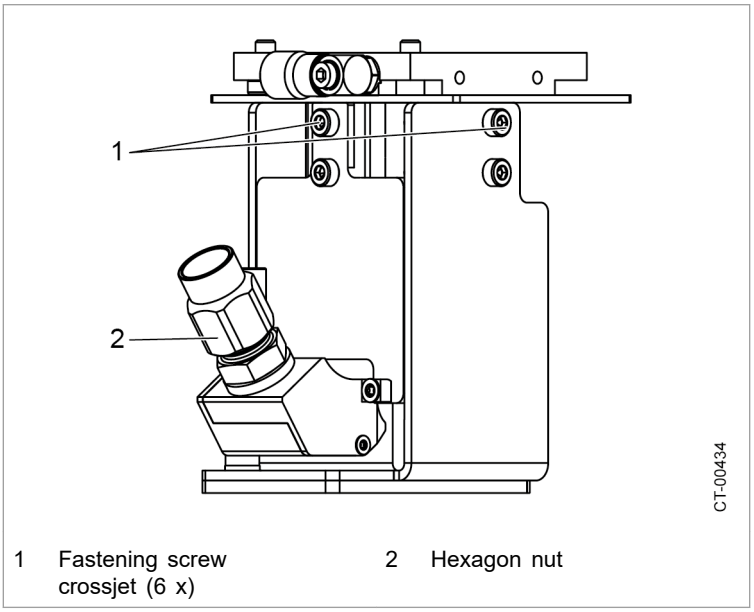

1 Fastening screw crossjet (6 x)

2 Hexagon nut

Fig. 5-21

1. Release hexagonal nut (2).
2. Pull supply air hose off the Crossjet.

Changing the Crossjet position

3. Unscrew the fastening screws (1) and remove the two parts of the crossjet.
4. Place both parts of the crossjet in the desired position on the cassette receptacle and screw in the fastening screws.
5. Insert the air supply hose into the fitting of the crossjet.
6. Tighten the hexagonal nut.

4.9 Cleaning the attachment parts

During the welding process, material spatter from the melt will be deposited on attachment parts e.g. the shielding gas supply line. The attachment parts should be cleaned regularly. The cleaning interval depends on the application and the resultant soiling.

See the Spare parts catalogue for the material numbers.

Condition

- The connected laser device has been switched off and secured against renewed switching on, e.g. by means of a shackle padlock.

or

- The light path to the focusing optics is blocked.

Means, Tools, Materials

- Steel brush
- Polishing fleece
- Spare parts (if required)

➢ Remove deposits on the attachment parts by means of a wire brush and polishing fleece.

If the component cannot be cleaned satisfactorily:

➢ Replace the component. For material numbers, see spare parts catalogue.

4.10 Replacing the sensor block

The sensor block represents the electrical interface between the cassette receptacle and proximity switch.

Switching signals, e. g., for indicating whether a protective glass cassette is plugged in or not, are conducted to the PLC via the sensor block.

Condition

- The connected laser device has been switched off and secured against renewed switching on, e.g. by means of a shackle padlock.

or

- The light path to the focusing optics is blocked.

Means, Tools, Materials

- Allen wrench, 2 mm

1. Disconnect the plug of the connecting cable from the PLC.
2. Loosen the two fastening screws of the sensor module.
3. Clean the screw-down surface.
4. Then, directly install the new sensor module in the reverse order.

4.11 Replacing the protective glass monitoring module

The protective glass monitoring module is for monitoring the cassettes and any contamination of the protective glass.

Monitoring and fault messages, such as the fault message of a non-engaged cassette, are sent from the protective glass monitoring module to the laser.

Condition

- The connected laser device has been switched off and secured against renewed switching on, e.g. by means of a shackle type connector.

or

- The light path to the focusing optics is blocked.

Means, Tools, Materials

- Allen wrench, 2 mm

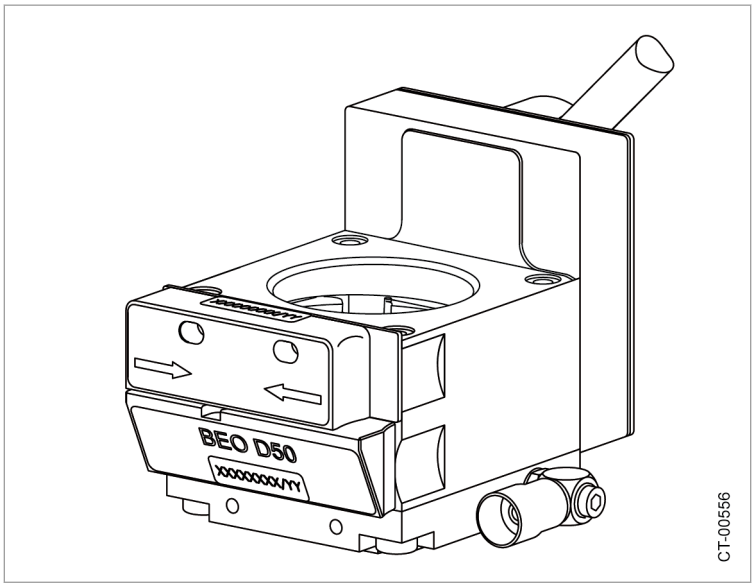

Fig. 5-22

1. Disconnect the plug of the connecting cable from the interface module or the connecting cable to the laser device.
2. Loosen the two fastening screws of the protective glass monitoring module.
3. Clean the screw-down surface.
4. Then directly install the new protective glass monitoring module in reverse order.

   Make sure that the antennas and scattered light diodes which project from the protective glass monitoring module are free of contamination.

   Be sure to use a flat seal and, if necessary, adjust the alignment of the cable outlet (see "Adjusting the connecting cable on the protective glass monitoring module").

4.12 Cooling water

Draining cooling water from the focusing optics

The cooling water must be drained from the focusing optics:

- During prolonged storage.
- When storing near the freezing point.
- Before transport when the focusing optics is sent back to the factory for repair and maintenance.

Condition

- The connected laser device has been switched off and secured against renewed switching on, e.g. by means of a shackle padlock.

or

- The light path to the focusing optics is blocked.

Means, Tools, Materials

- Protective gloves
- Collecting tank
- Slotted screwdriver, 3 mm

Removing the focusing optics

1. Unscrew focusing optics from the holder or the customer-provided mounting plate.
2. Disconnect focusing optics from the electrical system and the supply media.

Emptying the focusing optics

3. Provide a collecting pan.
4. Press in the connections of the cooling supply and return at the quick-acting couplings of the supply interface using a small screwdriver.
5. Hold focusing optics in such a way that the optical and electrical components will not get wet.
6. Tilt the focusing optics slightly so that the cooling water can run out.
7. Allow cooling water to drain into a collecting pan.

Chapter 6

Eliminating faults

1	**Conduct in case of malfunctions**	**6-2**
1.1	Step-by-step procedure:	6-2
1.2	Troubleshooting	6-2
1.3	Observing messages	6-3
1.4	Malfunctions, possible causes and measures	6-4
2	**Informing the service department**	**6-8**

1. Conduct in case of malfunctions

During daily work, malfunctions may occur which have to be rectified before the regular operation can be started again.

1.1 Step-by-step procedure:

1. Identify the cause of the fault.
2. Take the recommended measures.

DANGER

Actions carried out in order to rectify causes of malfunctions might involve risks to you, to other persons or to material property.

If such risks are not avoided, they can lead to death, serious injuries or considerable damage to property.

- Causes for malfunctions may only be remedied by persons who are sufficiently familiar with the laser device.
- Turn off the laser device, if it does not have to be connected for the elimination of the malfunction.
- Check the parts that carry dangerous voltage during operation for absence of voltage before touching them.
- Wear the personal protective equipment if required for the corresponding action (e.g. laser safety glasses, safety gloves).
- Observe the safety instructions of the manual and of other documents.

3. Inform the service department of TRUMPF if you cannot eliminate the malfunction yourself. Describe in detail how the malfunction occurred.

1.2 Troubleshooting

- To identify malfunctions, determine:

- Is it a malfunction of the laser device or of the laser light cable?

  In this case, a message is displayed on the screen, containing information on the location of the malfunction and the steps for eliminating the causes.

  Information on how to deal with the messages can be found in the operating software manual and in the Operator's manual for your laser device.
- Was the malfunction caused by an external component?

  Example: "EMERGENCY STOP circuit is not closed."

  In this case, a message is displayed on the screen, containing information on the possible causes.
- Is it a malfunction of the focusing optics?

  Possible causes for malfunctions of the focusing optics are explained in this chapter (see "Malfunctions, possible causes and measures", pg. 6-4).
- Is the machining result unsatisfactory?

  Possible causes for unsatisfactory machining results are explained in this chapter (see "Malfunctions, possible causes and measures", pg. 6-4).

1.3 Observing messages

Numerous operational values of the focusing optics are constantly monitored. In case an operational value is outside the permissible range, a message containing information on the cause of the malfunction and its elimination is displayed on the screen.

The following figure shows an example.

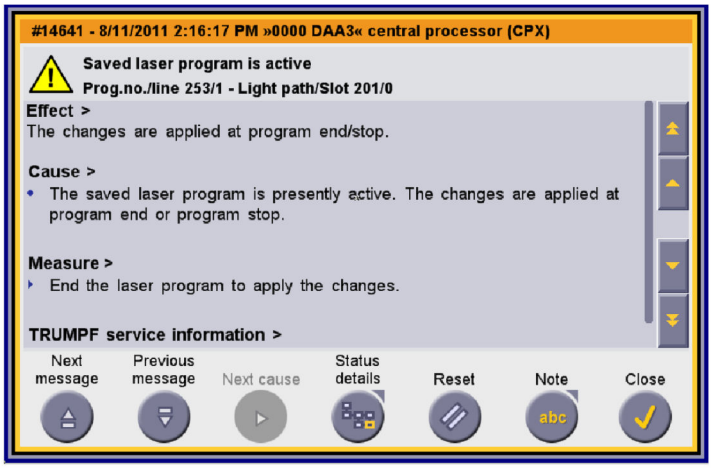

Message (example) Fig. 6-1

For further information on messages and the necessary actions, please refer to the software manual of the controlled focusing optics.

1.4 Malfunctions, possible causes and measures

Welding result went off

- Protective glass dirty
  - Clean the process or objective protective glass or replace it if required (see "Cleaning the protective glass in the process protective glass cassette", pg. 5-18)

    To identify dirt on the protective glass, e.g., due to oil mist, which cannot be immediately detected by means of visual inspection:

    Measure the laser power on the workpiece with the used protective glass and with a new protective glass.

    If the values differ, the protective glass is soiled or damaged.
  - Check the air pressure at the supply air connection of the crossjet; hoses must not be kinked or crushed

    Check spatter guard and MDE nozzle body for soiling and clean or replace it (see "Cleaning the splash guard", pg. 5-27)
  - Check the gas quality at the crossjet; only use oil- and water-free compressed air, check oil and water separator at regular intervals
- Protective glass damaged
  - Replace the protective glass (see "Cleaning the protective glass in the process protective glass cassette", pg. 5-18)
- Incorrect working distance
  - Set the working distance (see "Adjusting the working distance", pg. 4-8)
- Focal position misadjusted
  - Check or adjust the defocusing
- LLK not connected correctly
  - Check the coding pin on the optical plug; this must be located in the groove of the processing optics. Insert the plug as far as the stop. The sliding sleeve of the plug receptacle needs to be unlocked.
- Dual focus optics misaligned
  - Adjust the bifocal optics (see "Adjusting the dual focus optics", pg. 4-21)

- Position of optics changed (collision, vibration, insufficient fastening)
  - Readjust the optics to workpiece (see "Adjusting the focal position", pg. 4-6)
- Welding speed changed
  - Adjust the welding speed
  - Check whether the machine moves at the set velocity
- Focusing lens soiled or damaged from the inside
  - Call the TRUMPF customer service
- Laser parameters changed
  - When using a pulse laser device: check the pulse power, pulse duration and pulse repetition frequency
  - When using a CW laser device: check the set power
  - Power measurement with a clean protective glass
  - Troubleshooting in the laser device (see Operator's manual of the laser device)
- Objects project into the beam path (e.g. shielding gas supply, optics protection, devices)
  - Remove the objects from the beam path (see "Taking objects out of the beam guideway", pg. 4-8)
- Bend radius of LLK insufficient
  - Check the routing of the LLK, observe a min. bending radius of 200 mm
- Modifications of workpiece:
  - Joining geometry (such as joint gap, chamfer):

    Check joining device and workpieces
  - Surface quality (such as coating type, layer thickness, application method)

    Use uniform material quality
  - Joining zone contaminated:

    Check cleaning method and agent, clean again if necessary
  - Material composition changed:

    Change specification of the material
- Water-cooled optics:

  Water on focusing optics or workpiece
  - Check the connections of the cooling water supply
  - Check the cooling water hose
- Water-cooled optics:

  Connections of the cooling water supply are leaking
  - Check the connections of the cooling water supply
  - Check the cooling water hose
- Water-cooled optics:

  Reflected radiation by workpiece has caused cooling water hose to melt
  - Replace cooling water hose and protect it against radiation

Welding seam not smooth

- Effects of shielding gas insufficient
  - Check shielding gas supply:
    Level of gas bottle;
    replace empty gas bottle if necessary
  - Check hoses;
    they must not be kinked or crushed
  - Check flow;
    check nozzles for contamination; clean or replace, if necessary
  - Check gas quality and type

Optical system overheated

- Insufficient cooling water flow or no cooling water flow at all
  - Checking the flow
  - Check hoses; they must not be kinked or crushed
- Protective glass dirty
  - Clean the process or objective protective glass or replace it if required (see "Cleaning the protective glass in the process protective glass cassette", pg. 5-18)
  - To identify dirt on the protective glass, e.g., due to oil mist, which cannot be immediately detected by means of visual inspection:

    Measure the laser power on the workpiece with the used protective glass and with a new protective glass.

    If the values differ, the protective glass is soiled or damaged.
  - Crossjet:

    Check pressure at the supply air connection and hoses for buckling or squeezing

    Check spatter guard and MDE nozzle body for soiling and clean or replace it (see "Cleaning the splash guard", pg. 5-27)

    Check the gas quality, use only oil and water-free compressed air, check oil and water separator at regular intervals
- Reflection from workpiece
  - Cool optics (retrofitting necessary)
- Bend radius of LLK insufficient
  - Check the routing of the LLK, observe a min. bending radius of 200 mm

- Dirt on optical components (collimation, mirror, lens)
  - Visual inspection of the optics:

    Loosen and remove the LLK plug

    Hold the optics against a light source and inspect its condition via the plug receptacle
  - Replace the optical component if soiled, Call the TRUMPF customer service
- Higher load on optics than permissible ex works
  - Call the TRUMPF customer service

Incorrect welding position

- Camera maladjusted
  - Set the camera (see "Adjusting the Gen 2 observation optics", pg. 4-24)
- Dual focus optics misaligned
  - Adjust the bifocal optics (see "Adjusting the dual focus optics", pg. 4-21)

Monitoring by means of the camera unsatisfactory

- External lighting maladjusted
  - Check the location of the lighting spot and readjust this if necessary
- Power supply interrupted
  - Check power supply, re-establish power supply if necessary

Protective glass monitoring unit logs itself on and off of the laser control

- Loose contact at the plugs
  - Make sure plugs have a correct fit

Interface module logs itself on and off of the laser control

- Loose contact at the plugs
  - Make sure plugs have a correct fit

2. Informing the service department

If a fault occurs and you need assistance in eliminating it, please contact the TRUMPF service department. The service address is to be found at the beginning of these operating instructions, following the front page.

Please tell the service staff as precisely as possible:

- What happened?
- What has been displayed on the screen (e.g. message, message code)?
- What did you do?
- Is your laser device provided with the telepresence option?
  If yes, indicate the number of the connection.

The service staff will do their best to eliminate the fault as quickly as possible

Applications Laboratory

The Applications Laboratory of TRUMPF will be glad to give advice on application problems.