# Xiaoyan Life Kit
# quick start

## Xiaoyan Awareness Switch

## Model: TERNCY-PP01

Shanghai Xiaoyan Technology Co., Ltd.

# Xiaoyan Awareness Switch

Awareness switch is a ZigBee endpoint accessory, connected to the Home Center. It's composed of motion sensor, temperature sensor and a stateless programmable switch.

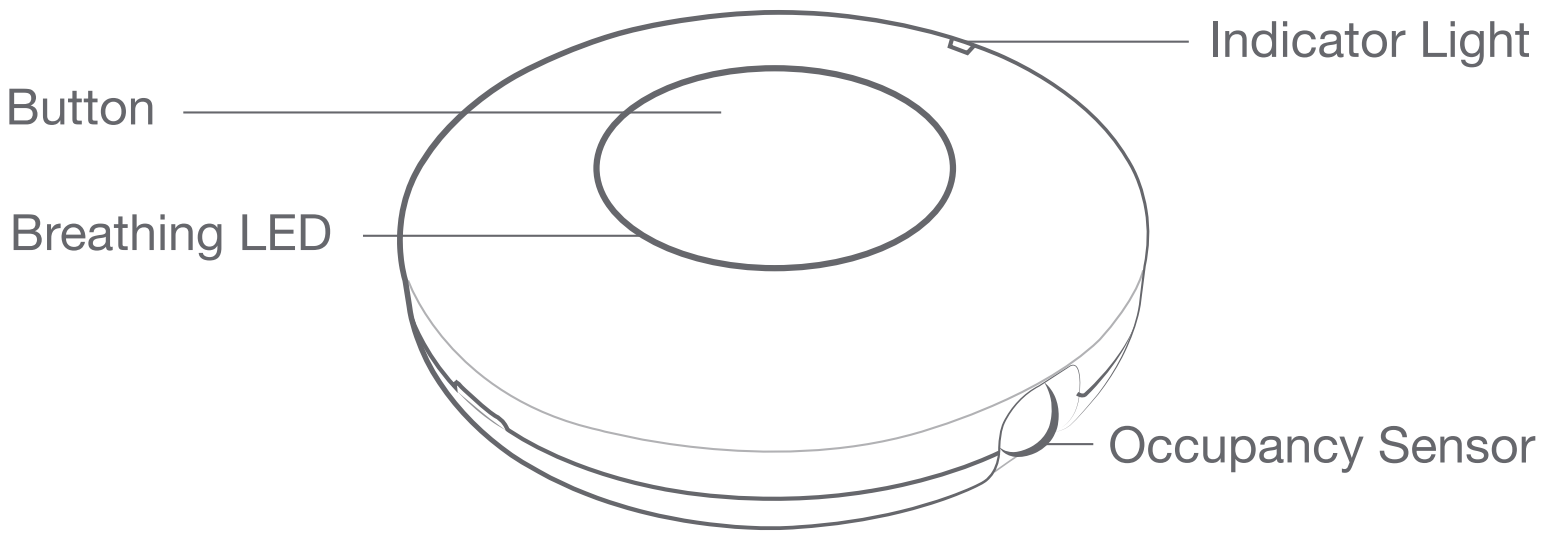

# Indicator Light State

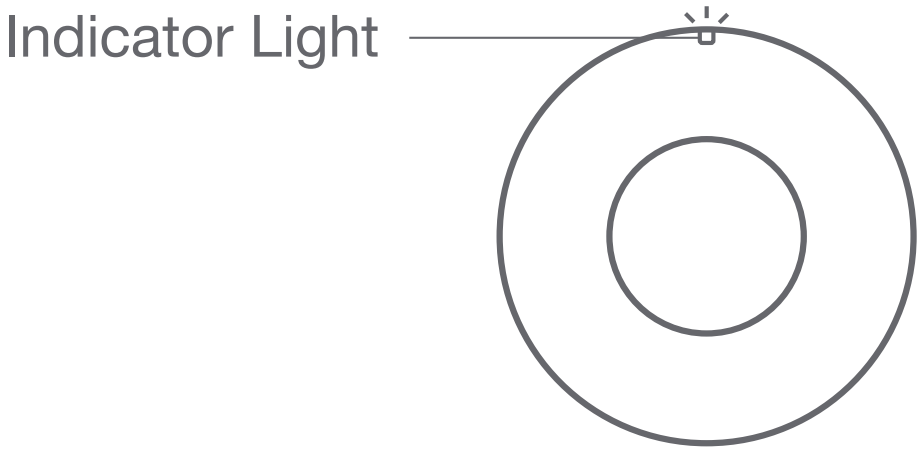


| | | |
|---|---|---|
| State | Green LED Fast Flashing (10 blinks per second) | Connecting to Home Center near by |
| | Green LED Slow Flashing (1 blink every 2 seconds) | Successfully connected to Home Center |
| | Yellow LED Medium Flashing (4 blinks per second) | Failed to connect to Home Center |

# Setup Accessory for The First Time

1. Start Xiaoyan app.
2. Select Device tab at the bottom of the app.
3. Click the "+" sign at the top right corner.
4. Click "End Point Accessory".

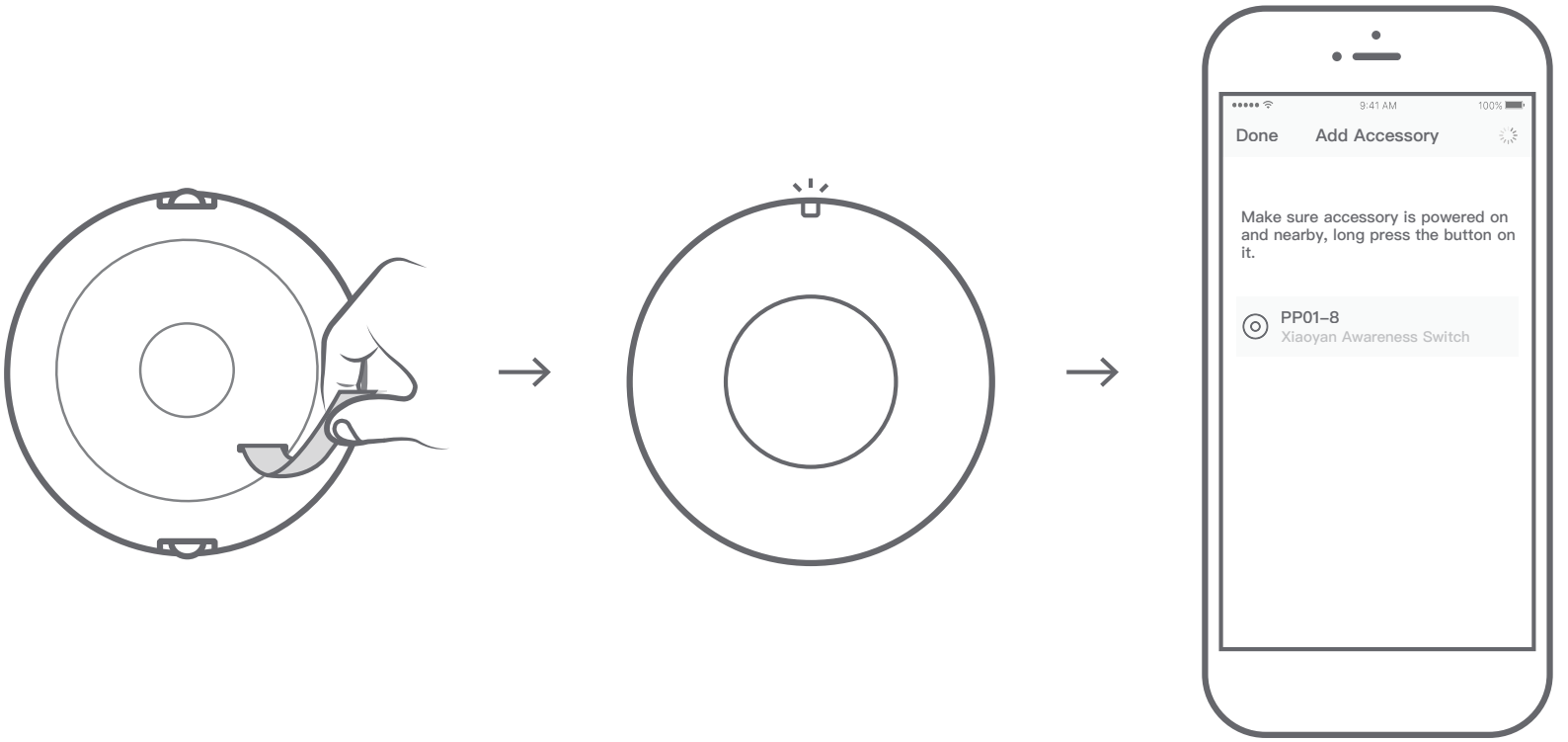


5. Remove the insulating strip, the green LED starts flashing.
6. Wait till the new accessory is shown in the list.
7. Click "Done" to go back.

# Setup Accessory Again

1. Start Xiaoyan app.
2. Select Device tab at the bottom of the app.
3. Click the "+" sign at the top right corner.
4. Click "End Point Accessory".

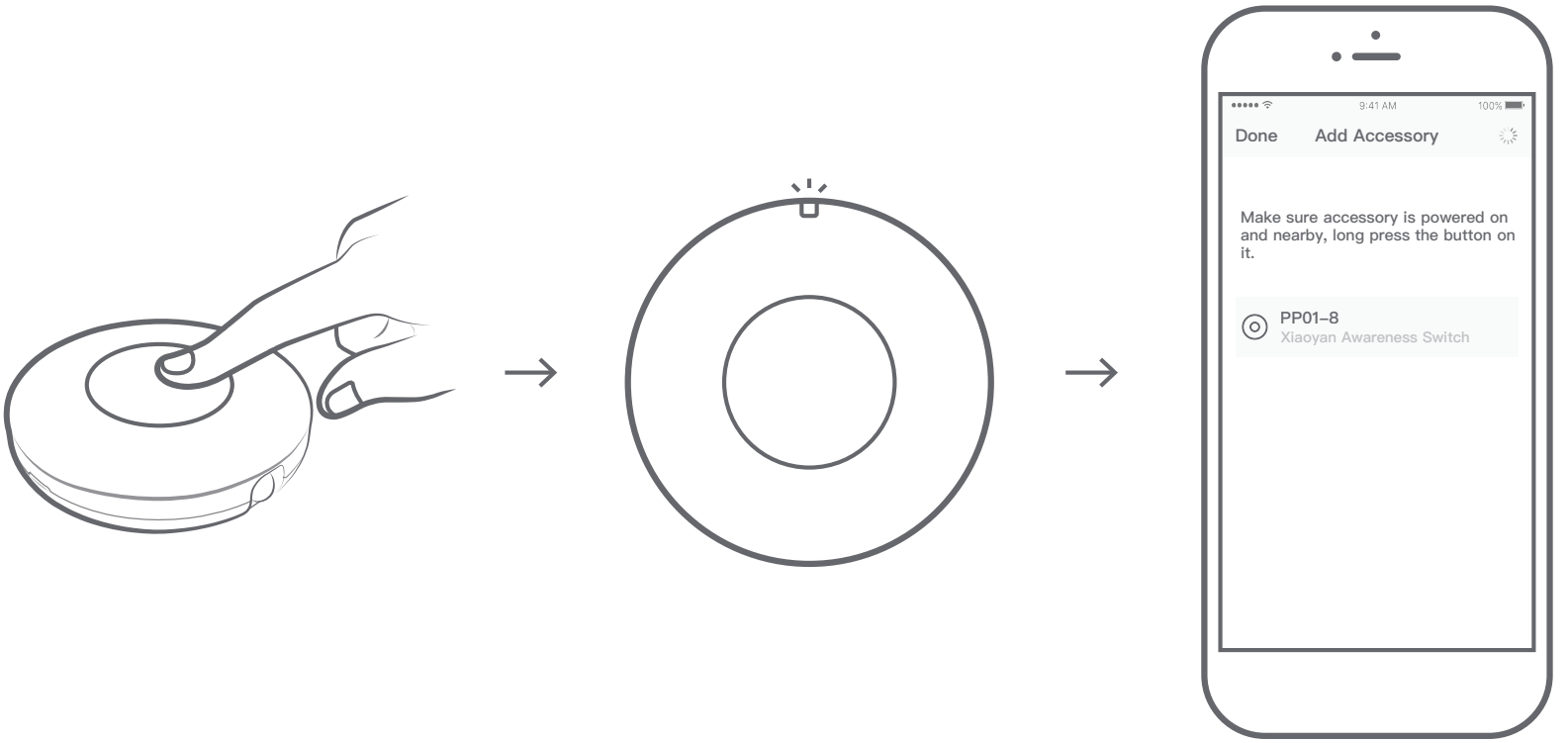


5. Press and hold the button for about 6 seconds till the green LED starts flashing.
6. Wait till the new accessory is shown in the list.
7. Click "Done" to go back.

# Battery Replacement

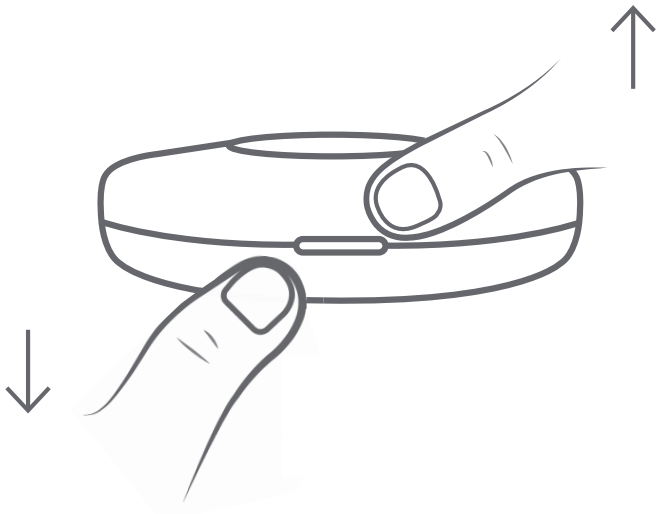

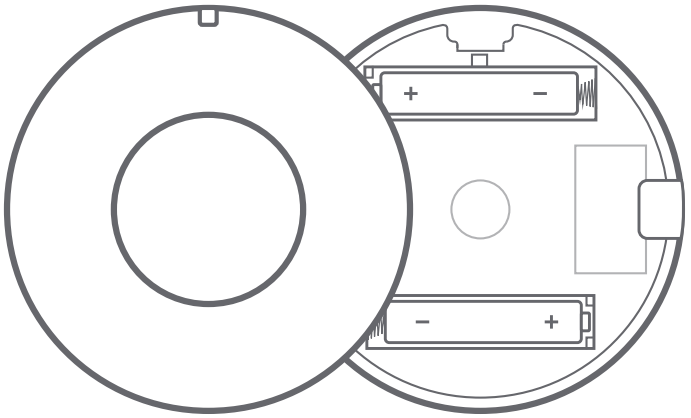


1. Open the awareness switch through the groove on the side.
2. Replace the AAA batteries with a new pair.

FCC Statement

Any Changes or modifications not expressly approved by the party responsible for compliance could void the user's authority to operate the equipment.

This device complies with part 15 of the FCC Rules. Operation is subject to the following two conditions: (1) This device may not cause harmful interference, and

(2) This device must accept any interference received, including interference that may cause undesired operation.

FCC Radiation Exposure Statement:

This equipment complies with FCC radiation exposure limits set forth for an uncontrolled environment .This equipment should be installed and operated with minimum distance 20cm between the radiator& your body.

Note: This equipment has been tested and found to comply with the limits for a Class B digital device, pursuant to part 15 of the FCC Rules. These limits are designed to provide reasonable protection against harmful interference in a residential installation. This equipment generates, uses and can radiate radio frequency energy and, if not installed and used in accordance with the instructions, may cause harmful interference to radio communications. However, there is no guarantee that interference will not occur in a particular installation. If this equipment does cause harmful interference to radio or television reception, which can be determined by turning the equipment off and on, the user is encouraged to try to correct the interference by one or more of the following measures:

—Reorient or relocate the receiving antenna.

—Increase the separation between the equipment and receiver.

—Connect the equipment into an outlet on a circuit different from that to which the receiver is connected.

—Consult the dealer or an experienced radio/TV technician for help.