INBAY
WIRELESS CHARGING

Wireless Charging Application 241050-01

Subsystem item no.: 240000-01-11

Wireless Charging Subsystem Qi 1.3 Gen.4 1-Coil	
Item number	240000-01-11
Specification:	- PCBA 1 Coil - Micro-Fit 3.0 Connector - Multicolor LED - On Board Fuse 4A
PCBA	IF 240000-01-11-1
Product Mode	EPP 15W Fixed Frequency 127,75 kHz ± 1.2 kHz
Ref.-Design/Coil Array	MP-A11
WPC Qi Standard	1.3.2 (under testing)

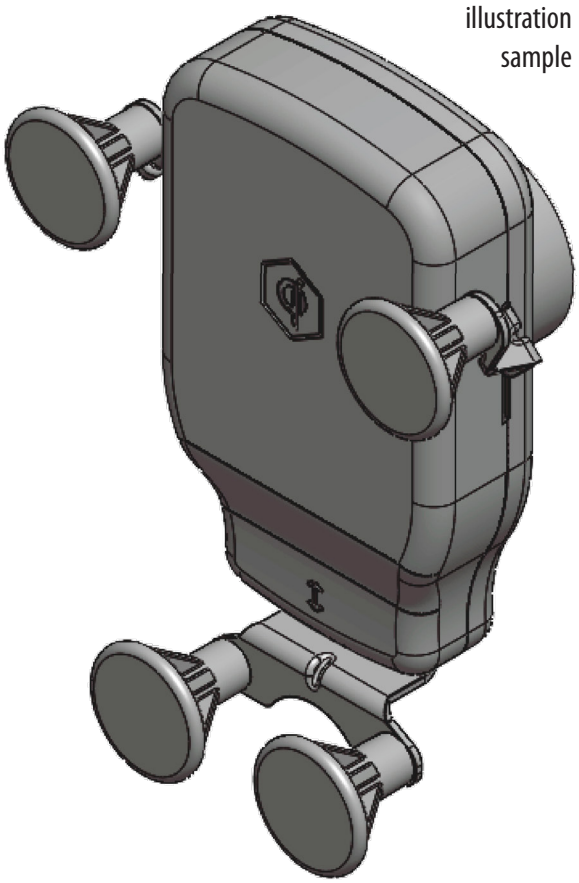

illustration sample

Wireless Charging Subsystem Qi 1.3 Gen.4 1-Coil

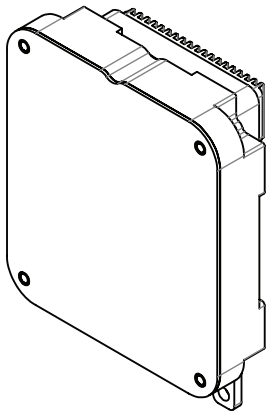

Features:

- Overvoltage Protection
- Over Current Protection
- Over Temperatur Protection
- Foreign Object Detection (FOD)

X 2 : 1

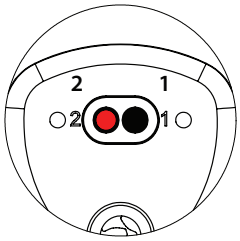

power supply

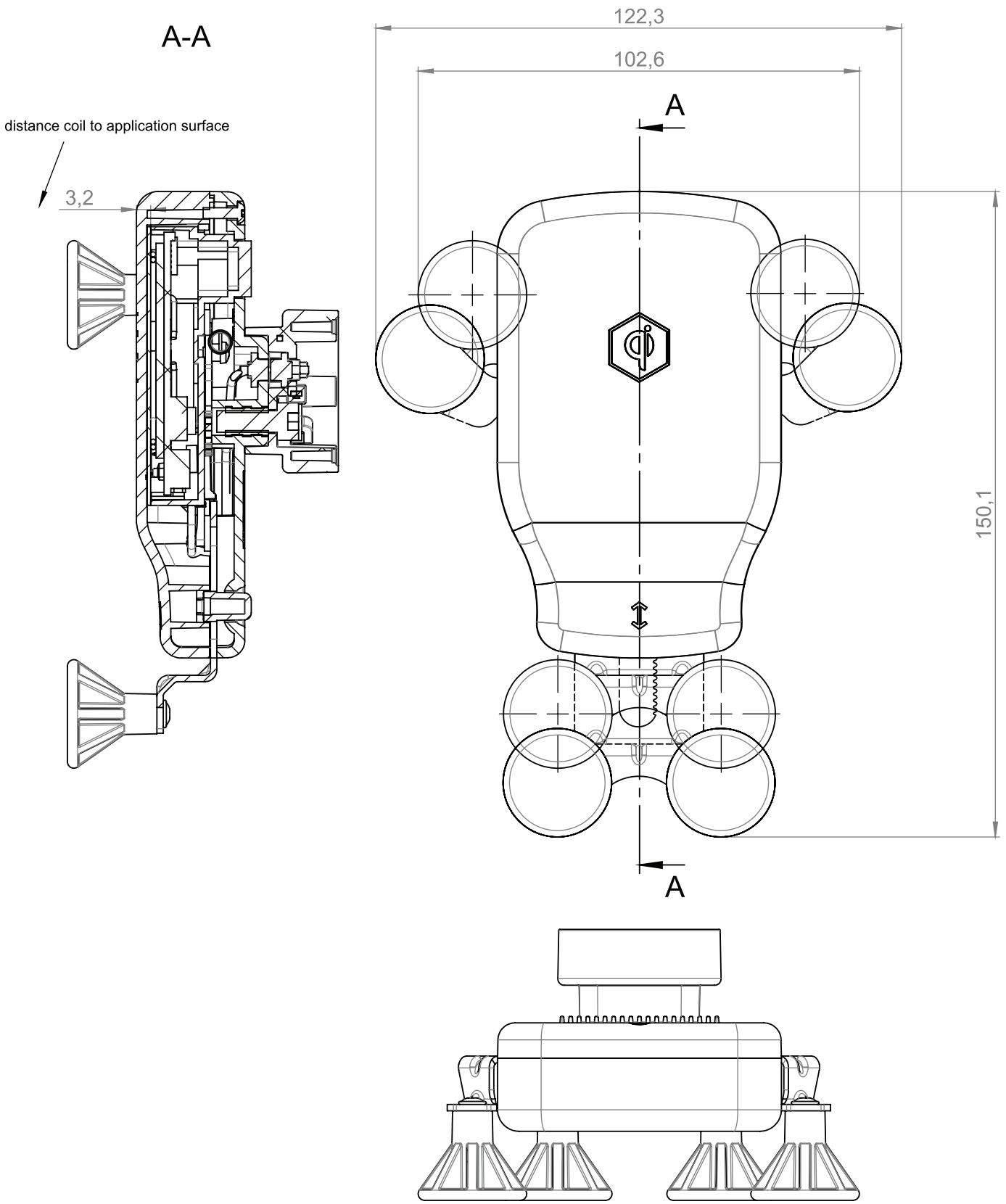
A-A
distance coil to application surface
3,2
122,3
102,6
A
150,1
A

INTEGRATED FOREIGN OBJECT DETECTION (FOD)

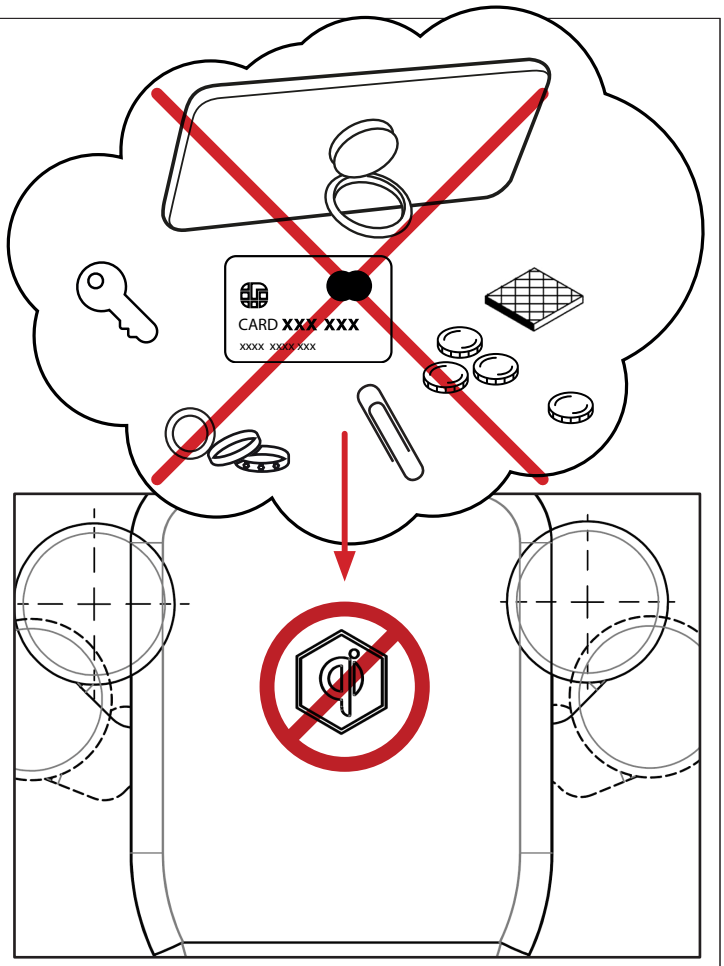

IMPORTANT INFORMATION:
Please don't place any other objects such as coins, credit cards etc. onto the INBAY surface. **Especially smartphones with attached ring stand holder must not be used!** - otherwise the integrated Foreign Object Detection (FOD) will interrupt wireless charging for safety reasons.

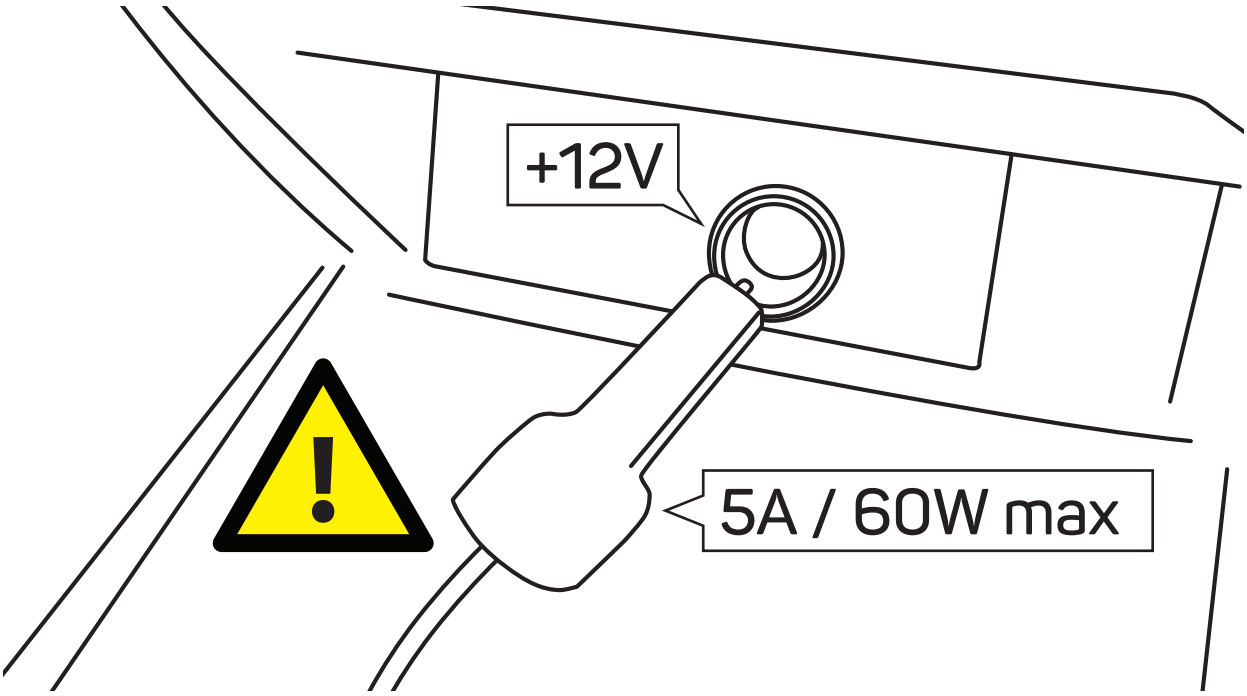

ATTENTION! After installation, devices/consumers with more than **5A / 60W** shall not be operated on the +12V socket. Otherwise a risk of overvoltage can occur!

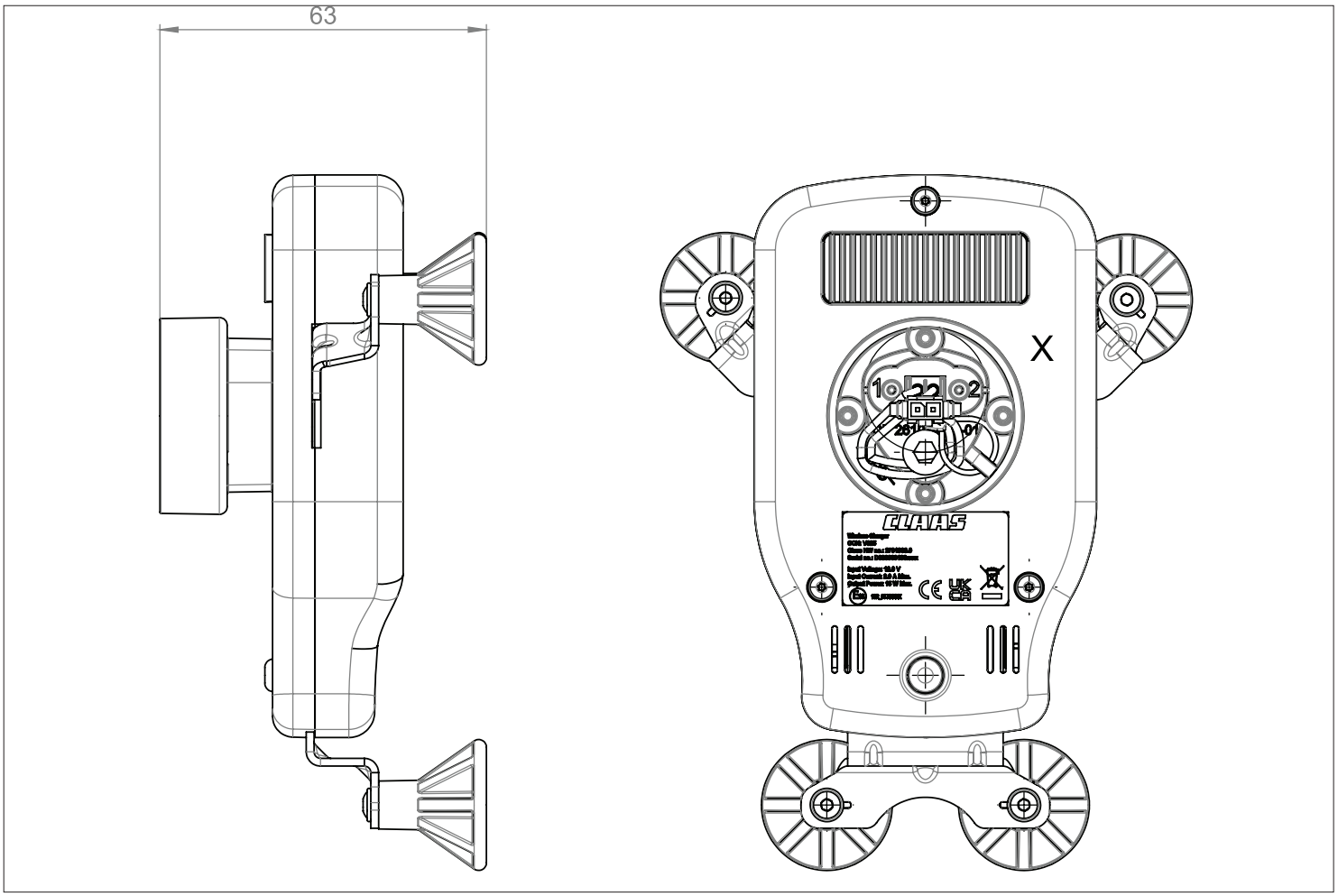

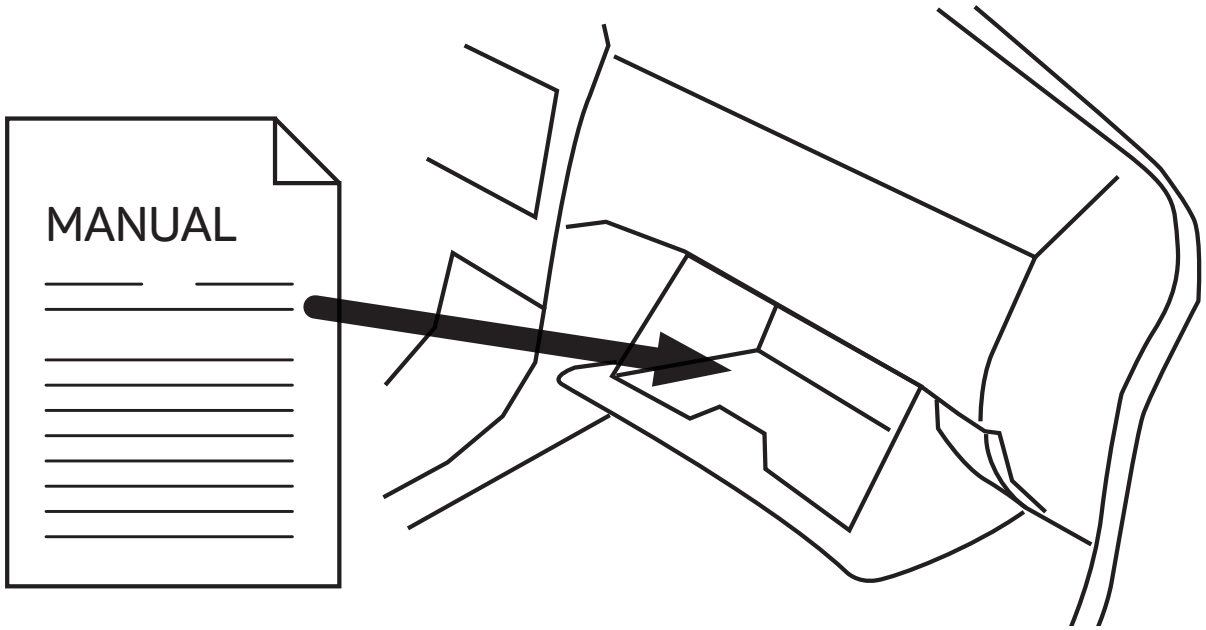

IMPORTANT! AFTER INSTALLATION THE MANUAL HAS TO BE PLACED INTO THE DASH BOARD OF THE CUSTOMER'S CAR.

FCC:

FEDERAL COMMUNICATIONS COMMISSION INTERFERENCE STATEMENT

This equipment has been tested and found to comply with the limits for a Class B digital device, pursuant to part 15 of the FCC Rules. These limits are designed to provide reasonable protection against harmful interference in a residential installation. This equipment generates, uses and can radiate radio frequency energy and, if not installed and used in accordance with the instructions, may cause harmful interference to radio communications. However, there is no guarantee that interference will not occur in a particular installation. If this equipment does cause harmful interference to radio or television reception, which can be determined by turning the equipment off and on, the user is encouraged to try to correct the interference by one or more of the following measures:
-Reorient or relocate the receiving antenna.
-Increase the separation between the equipment and receiver.
-Connect the equipment into an outlet on a circuit different from that to which the receiver is connected.
-Consult the dealer or an experienced radio/ TV technician for help.

CAUTION:

Any changes or modifications not expressly approved by the grantee of this device could void the user's authority to operate the equipment.

This device complies with Part 15 of the FCC Rules. Operation is subject to the following two conditions: (1) this device may not cause harmful interference, and (2) this device must accept any interference received, including interference that may cause undesired operation.

RF Exposure warning

This equipment must be installed and operated in accordance with provided instructions and the antenna(s) used for this transmitter must be installed to provide a separation distance of at least 20 cm from all persons and must not be co-located or operating in conjunction with any other antenna or transmitter. End-users and installers must be provide with antenna installation instructions and transmitter operating conditions for satisfying RF exposure compliance.

ISED :

Industry Canada Equipment Standard for Digital Equipment (ICES) –Canada Compliance Statement

This Class B digital apparatus complies with Canadian ICES-003. CAN ICES-3 (B)/NMB-3(B)
Cet appareil numérique de la classe B est conforme à la norme ICES-003. CAN ICES-3 (B)/NMB-3(B) du Canada.

Innovation, Science and Economic Development Canada (ISED) Compliance Statement

This device complies with ISED's licence-exempt RSS standard(s).
Operation is subject to the following two conditions: (1) this device may not cause interference, and (2) this device must accept any interference, including interference that may cause undesired operation of the device.

Le présent appareil est conforme aux CNR d' ISED applicables aux appareils radio exempts de licence. L'exploitation est autorisée aux deux conditions suivantes : (1) le dispositif ne doit pas produire de brouillage préjudiciable, et (2) ce dispositif doit accepter tout brouillage reçu, y compris un brouillage susceptible de provoquer un fonctionnement indésirable.

Radio Frequency (RF) Exposure Information

The radiated output power of the Wireless Device is below the Innovation, Science and Economic Development Canada (ISED) radio frequency exposure limits. The Wireless Device should be used in such a manner such that the potential for human contact during normal operation is minimized.
This device has also been evaluated and shown compliant with the ISED RF Exposure limits under mobile exposure conditions. (antennas are greater than 20 cm from a person's body).

Informations concernant l'exposition aux fréquences radio (RF)

La puissance de sortie émise par l'appareil de sans fil est inférieure à la limite d'exposition aux fréquences radio d'ISED Canada (ISED). Utilisez l'appareil de sans fil de façon à minimiser les contacts humains lors du fonctionnement normal.

Ce périphérique a également été évalué et démontré conforme aux limites d'exposition aux RF d'ISED dans des conditions d'exposition à des appareils mobiles (antennes sont supérieures à 20 cm à partir du corps d'une personne).

human exposure

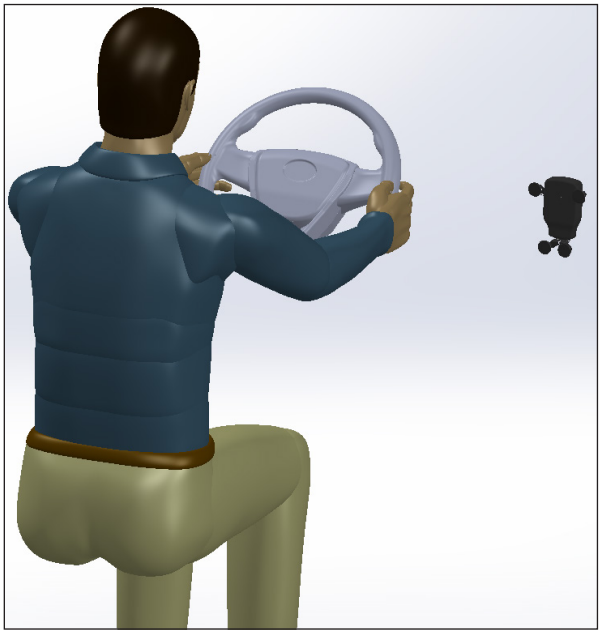

installation area (sample)

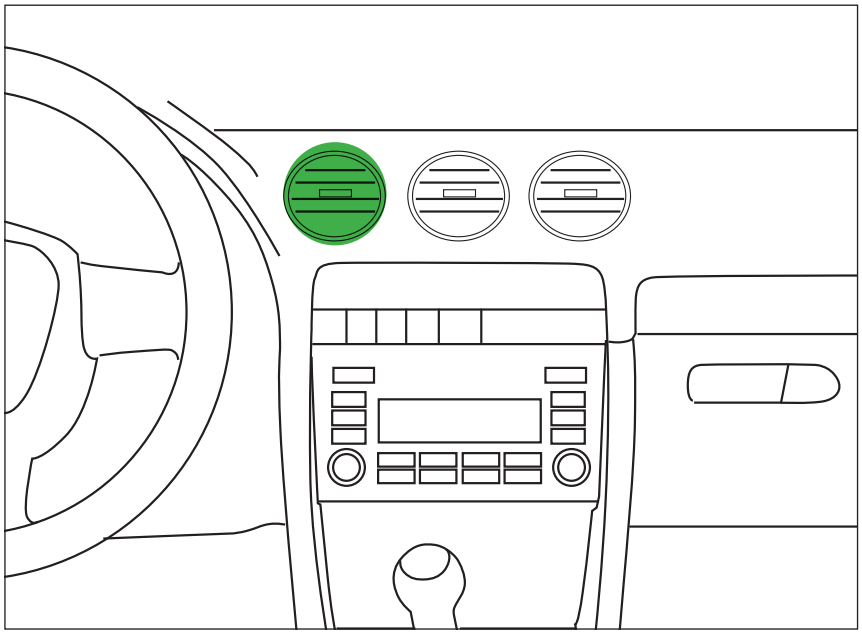

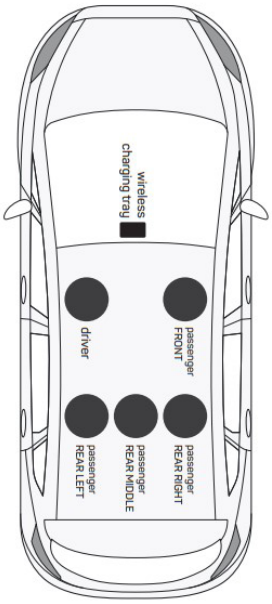

Driver Seat	
Knee	26,0 cm
Leg	42,5 cm
Body	50,0 cm
Hand	20,0 cm
Arm	46,5 cm
Head	66,0 cm

Passenger Seat	
Knee	34,0 cm
Leg	43,0 cm
Body	57,0 cm
Hand	34,0 cm
Arm	56,0 cm
Head	75,5 cm

Passenger	
rear left	
Knee	104,0 cm
Leg	108,0 cm
Body	139,5 cm
Hand	106,0 cm
Arm	145,0 cm
Head	151,0 cm

Passenger Seat	
rear middle	
Knee	101,5 cm
Leg	106,5 cm
Body	132,5 cm
Hand	101,5 cm
Arm	143,5 cm
Head	146,0 cm

Passenger Seat	
rear right	
Knee	102,5 cm
Leg	106,0 cm
Body	135,0 cm
Hand	110,0 cm
Arm	143,5 cm
Head	155,0 cm