Assembly Instructions

Step 1

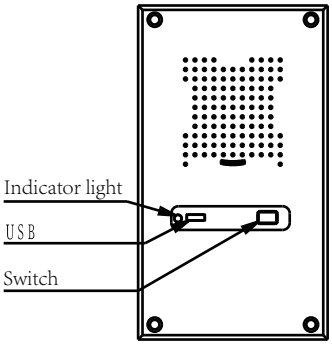

The usage instruction of bluetooth speakers

1. Turn on the both two speakers at the same time, this is important to ensure you can sync both speakers successfully , then you'll see instruction light on the speaker flash that indicated the speaker is on working.
2. Turn on Mobile's Bluetooth, search for name "taipeng" , then try to matches it and you'll hear sound "bee" indicated that you're successfully matches with both speakers.
3. Congratulation you can play music through your mobile.
4. If you powers off , you only click one switch so thay you can turn off all speakers.
5. When the power is low, the sound prompt " Battery is low, please recharge in time", then you will hear "bee, bee"that indicate the speakers turn off.
6. When charging, the indicator light will turn red. During charging, the indicator light will slowly dim..When fully charged, the red light will be extinguished.

Specification parameter

1. Bluetooth pairing name:taipeng
2. Receiving distance: 8 meters (no obstacle)
3. Bluetooth version:4.2
4. Speaker resistor: 4 OHM
5. Output power: 5w
6. Battery capacity: 2200 MA/H (18650 of 1 section)
7. Playtime:4.5 hours
8. The distance of TWS: within 6 meters(no obstacle)

Step 2

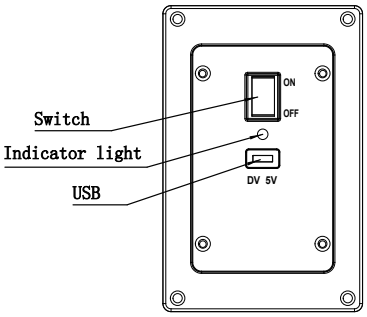

The usage instruction of LED light

1. When the switch is pressed, the light illuminates and can be used normally.
2. When the light is weak, please recharged immediately by USB interface.
3. The red light is on during chargeing and off when full.
4. It can continue for 10 hours after charged competely.

Specification parameter

1. Color temperature: 3800 k
2. Power: 1.5w
3. Battery capacity:2200 MA/H (18650 of 1 section)
4. The time of light on : 10-12 hours

Warning: Changes or modifications to this unit not expressly approved by the party responsible for compliance could void the user's authority to operate the equipment.

Customer Service

KG&COMP, Inc.

HOME OFFICE: 799 Roosevelt Road, Building 4/ Suite 002,
Glen Ellyn, IL 60137 USA
CUSTOMER SERVICE HOT LINE: 1-800-847-7508
SERVICE HOURS: MONDAY - FRIDAY 8:30 AM - 5:30 PM (EST)
E-MAIL: service@taipengchina.com

sears

Please refer to part numbers when reordering

For questions or comments about product:

Email: service@taipengchina.com or Call toll-free: 1-800-847-7508

Made in / Hecho en CHINA

Distributed by Sears, Roebuck and Co., Hoffman Estates, IL 60179

See our extensive assortment of outdoor living products on-line at www.sears.com and www.kmart.com

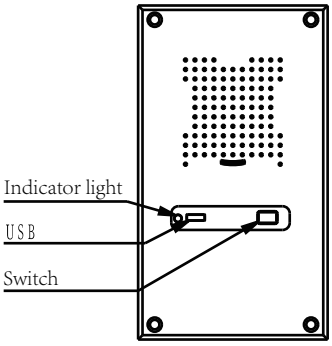

FCC Statement of bluetooth speakers

This equipment has been tested and found to comply with the limits for a Class B digital device, pursuant to Part 15 of the FCC Rules. These limits are designed to provide reasonable protection against harmful interference in a residential installation. This equipment generates uses and can radiate radio frequency energy and, if not installed and used in accordance with the instructions, may cause harmful interference to radio communications. However, there is no guarantee that interference will not occur in a particular installation. If this equipment does cause harmful interference to radio or television reception, which can be determined by turning the equipment off and on, the user is encouraged to try to correct the interference by one or more of the following measures:

-- Reorient or relocate the receiving antenna.

-- Increase the separation between the equipment and receiver.

-- Connect the equipment into an outlet on a circuit different from that to which the receiver is connected.

-- Consult the dealer or an experienced radio/TV technician for help.

§ 15.21 Information to user.

Any Changes or modifications not expressly approved by the party responsible for compliance could void the user's authority to operate the equipment.

§ 15.19 Labelling requirements.

This device complies with part 15 of the FCC Rules. Operation is subject to the following two conditions: (1) This device may not cause harmful interference, and (2) this device must accept any interference received, including interference that may cause undesired operation.