Veise

Installation Manual

Model No. VE029

Tutorial Video

Scan the QR code and search **VE029** to get the video.

Need Help? Contact Us!

Call us at **+1(855)400-3853** (Monday-Friday 9:00am-5:00pm PST), if you have any questions.

support@iveise.com **iveise.com**

Content

- Parts List ---------- 01
- Installation Guide ---------- 02

  Step 1: Prepare the Door & Check Dimensions ---------- 02

  Step 2: Install the Latch & Strike ---------- 06

  Step 3: Adjust the Lever Direction ---------- 08

  Step 4: Install Exterior Assembly ---------- 10

  Step 5: Install Interior Assembly ---------- 11
- How to Reset ---------- 14
- Troubleshooting ---------- 15

Installation Overview

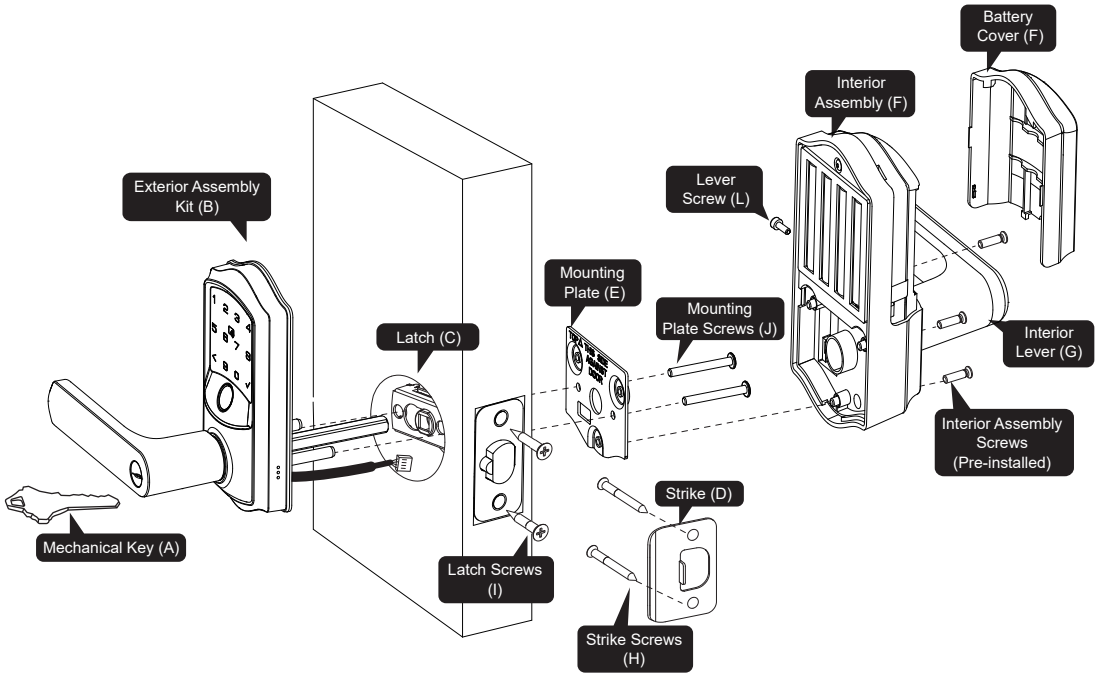

Parts List

A Mechanical Key x2	B Exterior Assembly Kit x1	C Latch x1	D Strike x1
E Mounting Plate x1	F Interior Assembly x1 (Screws Pre-installed) G Interior Lever	H Strike Screws x2	I Latch Screws x2
J Mounting Plate Screws x2	K Reset Tool x1	L Lever Screw x1 M Hex Wrench	N User Card x2

⚠Missing any parts? Call us at **+1(855)400-3853.** **support@iveise.com**

Installation Guide

Step 1: Prepare the Door & Check Dimensions

1

The hole in the door is 2-1/8" (54mm).

The hole in the door edge is 1" (25mm).

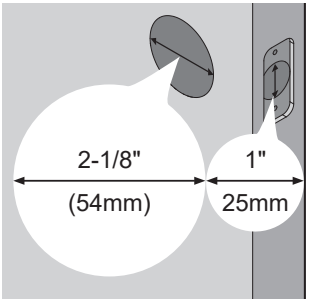

2

The backset is either 2-3/8" or 2-3/4" (60mm or 70mm).

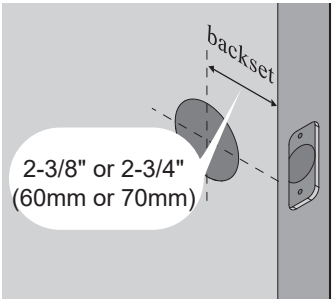

3

The door thickness is 1-3/8" to 2" (35mm to 50mm).

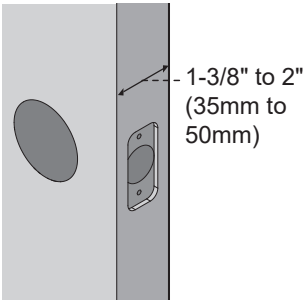

4

NOTE:

Make sure the door frame is aligned with the door.

There are no obstructions stuck in the door frame.

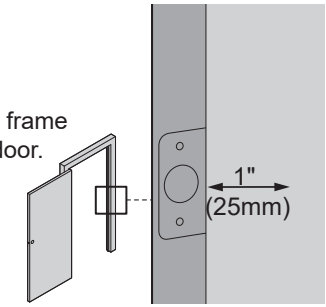

Installation Guide

Three Installation Methods

Method 1: Installed on the Single Hole

Installation Guide

Three Installation Methods

Method 2: Installed Above the Deadbolt

Remove the existing handle, and move the deadbolt downward.

1

2

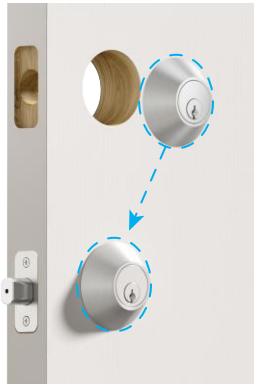

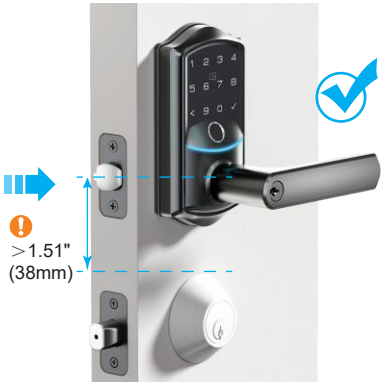

Installation Guide

Three Installation Methods

Method 3: Installed Below the Deadbolt

NOTE:
If the distance is under 4.37" (110mm), either install the lock above the deadbolt (see Method 2) or remove the deadbolt, cover the hole with a Door Hole Cover Plate (not included), and install the lock.

Installation Guide

Step 2: Install the Latch & Strike

1 Confirm the backset and adjust the Latch.

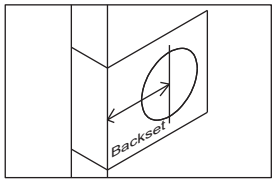

Backset is the distance from the door edge to the center of the hole in the door.
The Latch is provided with adjustable design which can fit either 2-3/8''(60mm) or 2-3/4''(70mm) backset.

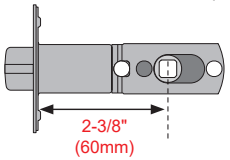

If the backset of your door is 2-3/8"(60mm), no need to adjust the Latch.

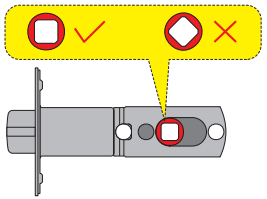

If the backset of your door is 2-3/4"(70mm), please adjust the Latch as shown in the images below.

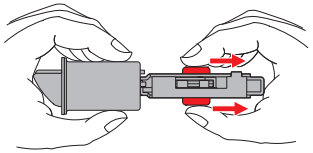

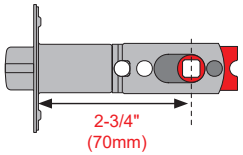

Installation Guide

Step 2: Install the Latch & Strike

2 Install the Latch and check its orientation from outside the door.

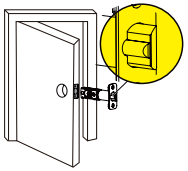

Opening Outwards

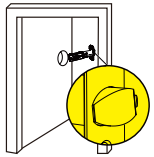

Opening Inwards

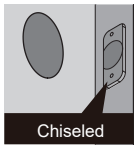

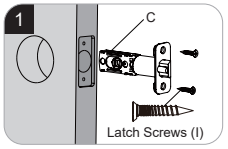

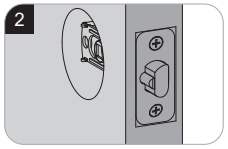

3 Install Strike on the door frame.

IMPORTANT:
Make sure the hole in door frame is drilled a minimum of 1" (25mm) deep.

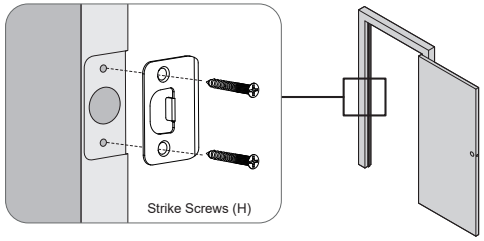

Installation Guide

Step 3: Adjust the Lever Direction

1 Exterior Lever

Left-handed Door

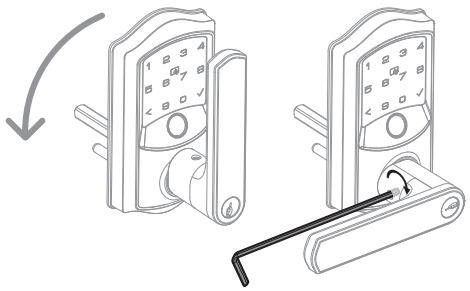

Right-handed Door

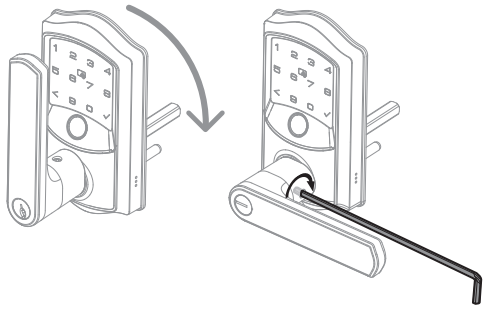

1. Ensure that the Lever can move left and right.
2. Turn the Lever to the left or right side.
3. Tighten the Lever Screw with the Hex Wrench.

Installation Guide

Step 3: Adjust the Lever Direction

2 Interior Lever

Left-handed Door

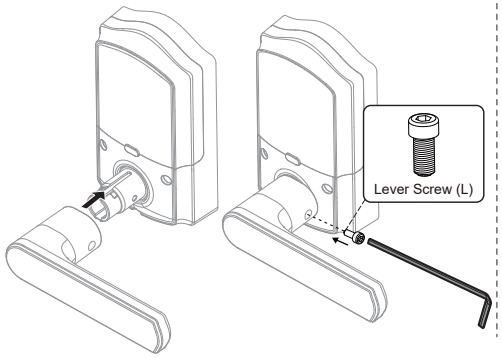

Right-handed Door

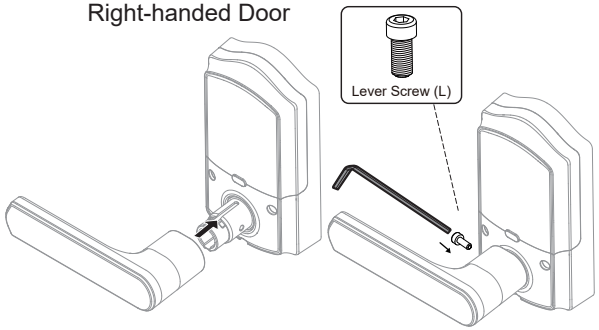

1. Locate the Interior Lever in the accessories.
2. Determine the correct installation direction.
3. Fix the Lever on the left or right side.
4. Tighten the Lever Screw with the Hex Wrench.

Installation Guide

Step 4: Install Exterior Assembly

1 Route the cable below the Latch and insert the Torque Blade through the slot in the Latch.

Do not insert the Mechanical Key into the cylinder during the installation.

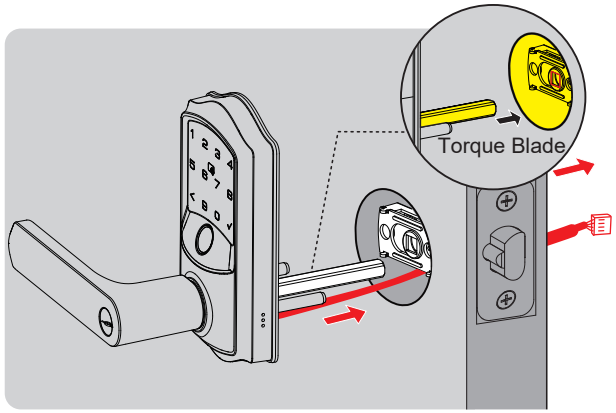

2 Install the Mounting Plate with the Mounting Plate Screws.

Do not overtighten screws.

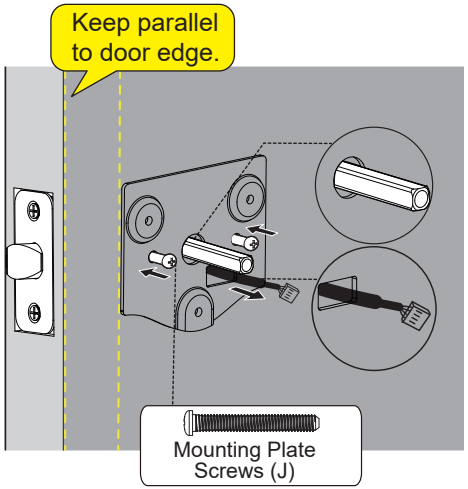

Installation Guide

Step 5: Install Interior Assembly

1 Disassemble the Battery Cover.

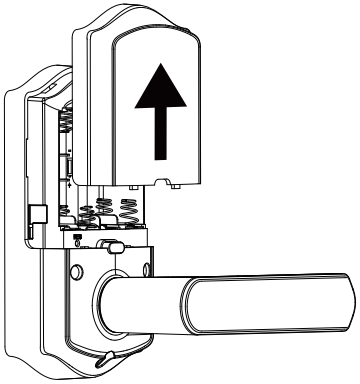

⚠ Important:
Do not load batteries until the lock is completely installed.

2 Insert the cable connector into the socket and push it in securely.

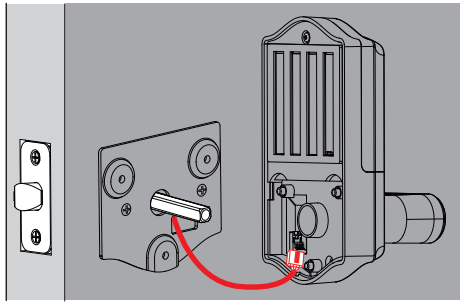

NOTE:
Tuck excess cable into the socket to avoid blocking screw holes or interfering with cover installation.

Installation Guide

Step 5: Install Interior Assembly

3 Attach Interior Assembly to Mounting Plate and tighten 3 screws.

NOTE:
Be sure not to use the wrong screws, or it may lead to short-circuit and other problems.

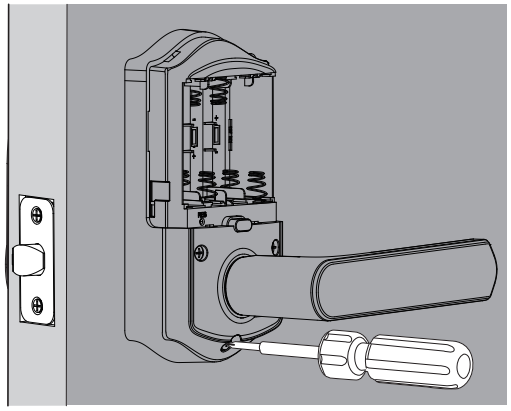

4 Insert 8 AA Alkaline batteries and put on the Battery Cover.

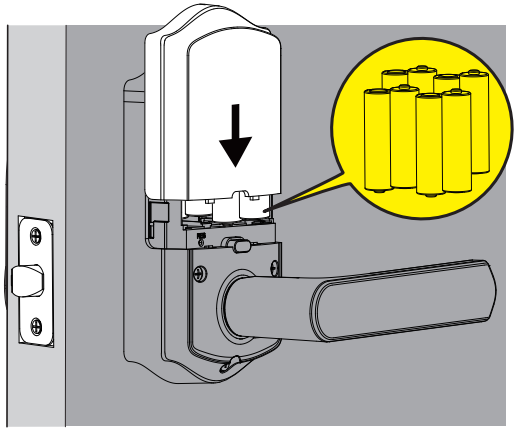

Installation Guide

Step 5: Install Interior Assembly

If you ever need to remove the batteries, follow these steps:

- Remove the outer 4 batteries from right to left.

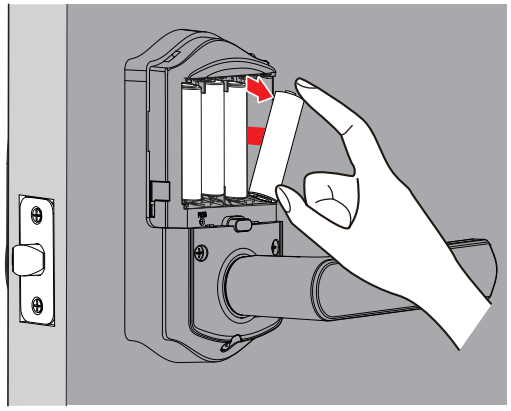

- Pull the ribbon to remove the inner 4 batteries from right to left. If stuck, use the Reset Tool to gently push them out.

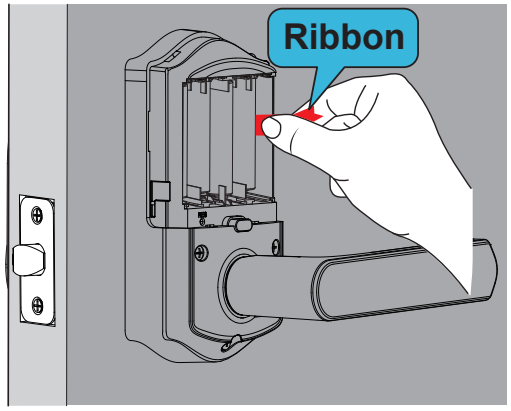

How to Reset

1. Press and hold the Reset Button for 5 seconds by using the Reset Tool.

2. Keep holding the Reset Button until you hear the voice prompt “Restored to factory settings”.

Scan the QR code
Search **VE029**

Call us at **+1(855)400-3853**,
if you have any questions.
support@iveise.com **iveise.com**

Settings	Factory Default
Master Code	12345678
Auto Lock	Enabled
Silent Mode	Disabled
Wrong Entry Limit	10 times
Shutdown Time	3 mins

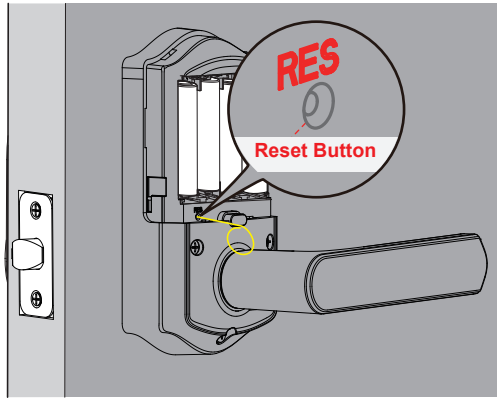

Troubleshooting

▶ Fail to reset.

1. The battery is low if the battery indicator light keeps flashing. Please replace it with 8 new batteries. (Alkaline batteries only)
2. Please refer to **“How to Reset”** section and perform a resetting again.

▶ Exterior Lever cannot be reversed.

1. Ensure that the Lever can rotate smoothly to the left and right. If it does not, please get in touch with our customer service for assistance.
2. If the Lever rotates properly, check if the screw is attached to the Lever. If there is no screw, contact customer service for further guidance.
3. If the screw is located on the Lever, turn the Lever 90 degrees to the left or right depending on the direction of your door opening. Then, align the screw hole and tighten the screw. After correct installation, the Lever should be firmly fixed and able to rebound when pressed down, confirming a successful installation.

▶ Interior Lever cannot be reversed.

1. Ensure the Interior Lever is securely in place. Locate the screw hole and use the appropriate screw and wrench to tighten it.
2. If you are unable to complete the installation, please contact our customer service for support.

Troubleshooting

▶ How to lock manually on the Keypad from outside?

1. Touch ✓ once.
2. Press and hold any button for 2 seconds.
3. Use your Fingerprint.

▶ How to lock manually from inside?

1. Press the Multi-Function Button located above the Interior Lever. You will hear a "Door locked" sound confirming the lock.
2. In this state, the door cannot be unlocked from the outside by pressing the Lever. To unlock the door, simply press the Interior Lever again.

If you have any questions, please contact us at **+1(855)400-3853**.
support@iveise.com

FCC Caution

This device complies with part 15 of the FCC Rules. Operation is subject to the following two conditions:

(1) This device may not cause harmful interference.

(2) this device must accept any interference received, including interference that may cause undesired operation.

Any Changes or modifications not expressly approved by the party responsible for compliance could void the user's authority to operate the equipment.

Note: This equipment has been tested and found to comply with the limits for a Class B digital device, pursuant to part 15 of the FCC Rules. These limits are designed to provide reasonable protection against harmful interference in a residential installation. This equipment generates uses and can radiate radio frequency energy and, if not installed and used in accordance with the instructions, may cause harmful interference to radio communications. However, there is no guarantee that interference will not occur in a particular installation. If this equipment does cause harmful interference to radio or television reception, which can be determined by turning the equipment off and on, the user is encouraged to try to correct the interference by one or more of the following measures:

-Reorient or relocate the receiving antenna.

-Increase the separation between the equipment and receiver.

-Connect the equipment into an outlet on a circuit different from that to which the receiver is connected.

-Consult the dealer or an experienced radio/TV technician for help.

FCC Radiation Exposure Statement

This equipment complies with FCC radiation exposure limits set forth for an uncontrolled environment. This equipment should be installed and operated with minimum distance 20cm between the radiator & your body.

IC Warning

This device complies with Innovation, Science and Economic Development Canada's

licence-exempt RSSs. Operation is subject to the following two conditions:

(1) This device may not cause interference.

(2) This device must accept any interference, including interference that may cause undesired operation of the device.

This equipment complies with IC radiation exposure limits set forth for an uncontrolled environment. This equipment should be installed and operated with minimum distance 20cm between the radiator & your body.

L'émetteur/récepteur exempt de licence contenu dans le présent appareil est conforme aux CNR

d'Innovation, Sciences et Développement économique Canada applicables aux appareils radio exempts de

licence. L'exploitation est autorisée aux deux conditions suivantes:

(1) Ce dispositif ne peut causer d'interférences ; et

(2) Ce dispositif doit accepter toute interférence , y compris les interférences qui peuvent causer un mauvais fonctionnement de l'appareil.

Ce matériel est complété par une exposition de rayonnements IC pour un environnement naturel. Ce matériel doit être installé et se faire avec une distance minimale de 20cm entre les radiateurs et les autresYour body shop.

Information & Safety Warnings

• Protect your PIN Codes and Master Code.

• Restrict access to your lock's Interior Assembly and routinely check your settings to ensure they have not been altered without your knowledge.

• Do not use an electric screwdriver during installation.

• This manufacturer advises that no lock can provide complete security by itself.

• This lock may be defeated by forcible or technical means, or evaded by entry elsewhere on the property.

• No lock can substitute for caution, awareness of your environment, and common sense.

• Take care to ensure a long-lasting finish. Please use soft and damp cloth to clean the lockset if you need. Using lacquer thinner, caustic soaps, abrasive cleaners or polishes could damage the coating and result in tarnishing.

• The lock is water-resistant. It can withstand water splashes; however, do not let water and liquids get into the lock.

• Avoid exposure to direct sunlight. Long-term exposure to direct sunlight may damage the lock.

Need Help? Contact Us!

If you have any questions, please contact us at

+1(855)400-3853

(Monday-Friday 9:00am-5:00pm PST)

support@iveise.com **iveise.com**

If you have your ***order ID*, videos or images of your problem** (if necessary) ready before contacting Customer Support, we will solve your problem faster and better.

V1.0