KWFV01
Video Smart Lock

Installation Guide / Quick Start Guide

Thank you for purchasing our products. Please review this manual thoroughly before operating your device.
All pictures in this manual are for illustration purpose only. Actual product may vary due to product upgrade.

QUICK START GUIDE

1

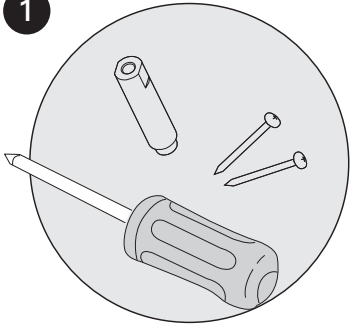

Following the installation instruction to install the smart lock.

2

Download KK Home App.

3

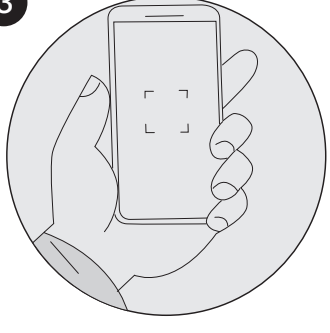

Register and Log in KK Home App, add device by scanning QR code on the device.

4

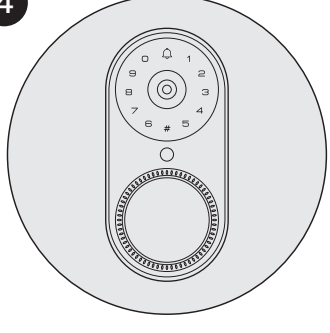

Calibrate the smart lock and Complete Bluetooth & Wi-Fi settings in the App.

AT A GLANCE

Exterior Assembly

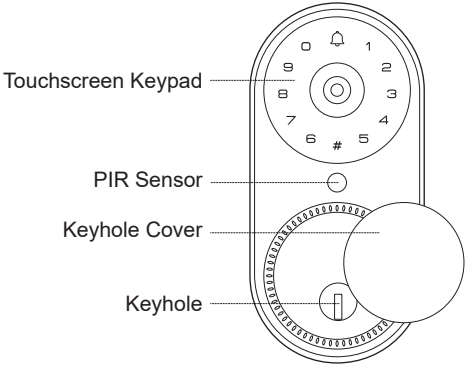

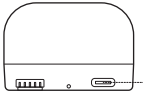

Type-C
Charge Port

Interior Assembly

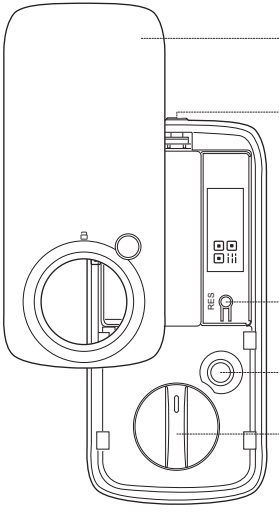

Battery
Cover

Battery Cover
Button

Reset
Button

Privacy
Button

Thumb Turn

DEFINITIONS

• Wrong Entry Limit

After 5 unsuccessful attempts at entering an invalid PIN code, the unit will shut down for 3 minutes.

• One Touch Locking

Press and hold any key on the keypad for at least 2 seconds to lock the door from outside.

• Privacy Button

Press and hold the Privacy button for 3 seconds to enable Privacy Mode.

In Privacy Mode, it will disable all Password access and App Control. The Privacy Mode will be disabled automatically after unlocking with the Thumb Turn or Mechanical Key.

• Reset Button

Push and hold the Reset Button for 5 seconds to reset your device. After resetting, the lock will be restored to factory default settings, all settings will be disabled.

• Battery Indicator (#)

The Battery Indicator will turn Red if the battery is running lower than 20%. Please replace the batteries as soon as possible.

• Type-C Port

Power the smart lock with a portable charger via Type-C port when the batteries are completely dead.

HOW TO LOCK / UNLOCK

UNLOCK the door from outside

1. Master/User code
   +
   ✓
2. Key Unlock

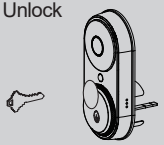

UNLOCK the door from inside

Rotate the thumb turn to Unlock position.

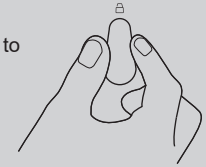

LOCK the door from outside

1. Auto Lock Mode
   In Auto Lock mode, the device will be locked automatically.
2. One touch Lock
   Press any key on keypad for 2 seconds.
3. Key Lock

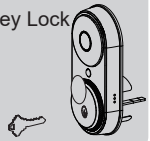

LOCK the door from inside

1. Auto Lock Mode
   In Auto Lock mode, the device will be locked automatically.
2. Rotate the thumb turn to Locked Position.

INSTALLATION OVERVIEW

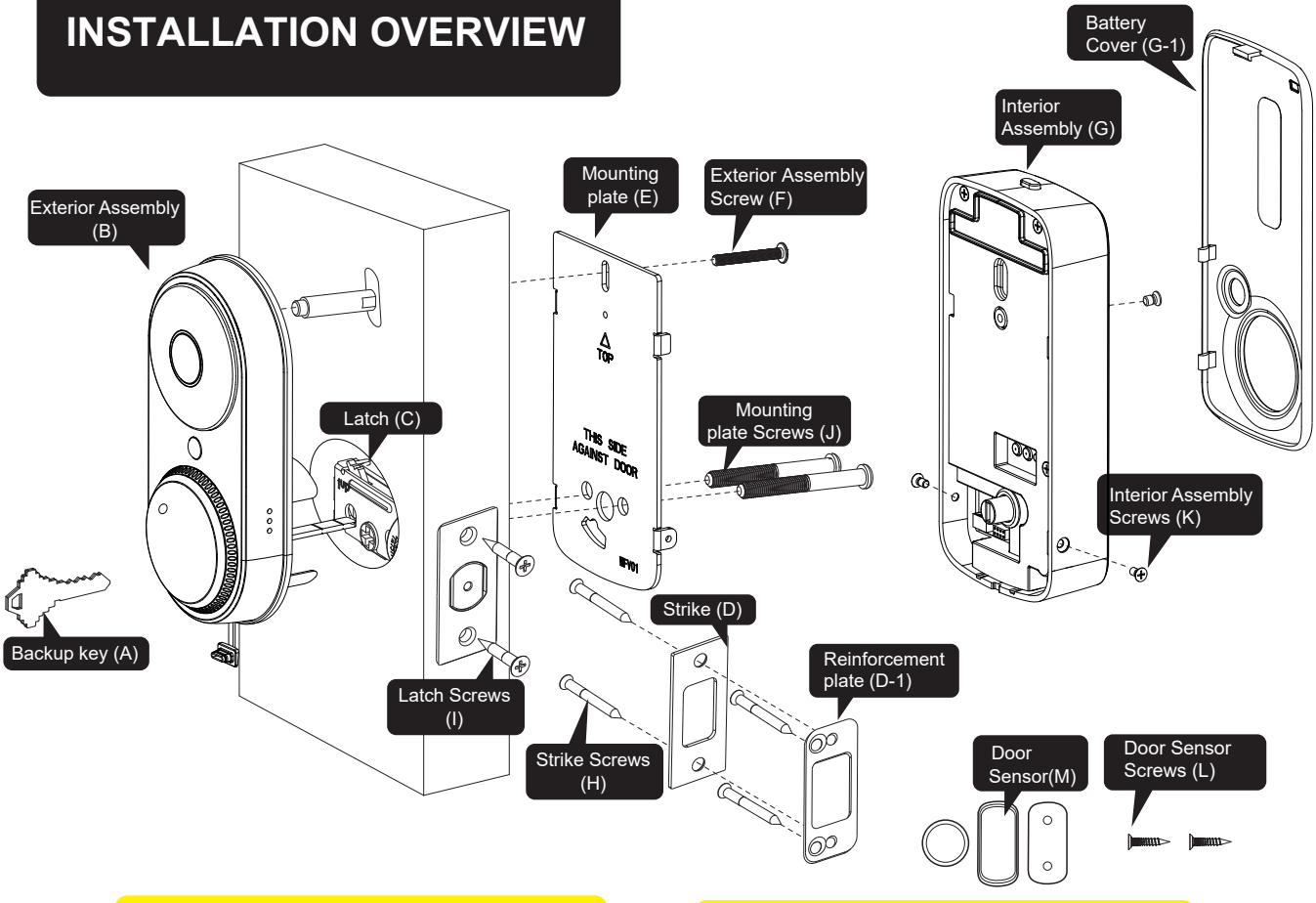

TOOL REQUIRED:

Do not use an electric screwdriver during installation.

IMPORTANT:

Do not load batteries until lock is completely installed.

Parts List

A Backup Key x2	B Exterior Assembly x1	C Latch x1 C-1 Drive-In Collar (Optional)	D Strike x1 D-1 Reinforcement Plate x1 (optional)
E Mounting Plate x1	F Exterior Assembly Screw (Optional)	G Interior Assembly x1 G-1 Battery Cover x1	H Strike Screws x4 I Latch Screws x2
J Mounting plate Screws x4 (35mm<door thickness<45mm) (45mm<door thickness<50mm)	K Interior Assembly Screws x4 L Door Sensor Screws x2	M Door Sensor x1 N Li-ion Battery	O Chime

If any parts are missing or damaged, please contact Customer Support.

STEP

1 Prepare the door and check dimensions

A

Measure to confirm that the hole in the door is 1-1/2'' or 2-1/8" (38mm or 54mm)

Measure to confirm that the hole in the door edge is 1" (25mm).

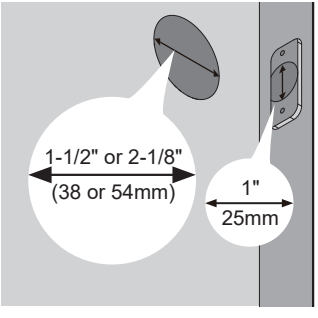

B

Measure to confirm that the backset is either 2-3/8" or 2-3/4" (60 or 70mm)

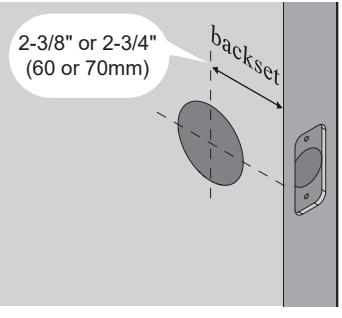

C

Measure to confirm that the door is 1-3/8" to 2" (35 mm to 50mm) thick.

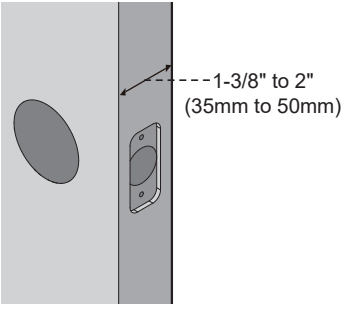

D

Make sure the hole in the door frame is drilled a minimum of 1'' (25mm) deep, to leave enough space for the deadbolt to extend into the door frame when the door is locked.

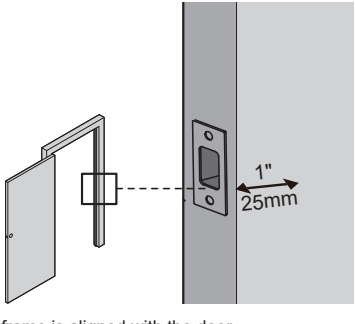

Notes: Make sure the door frame is aligned with the door.
There are no obstructions stuck in the door frame.

STEP

2 Install the latch and strike

A Determine backset and adjust the latch

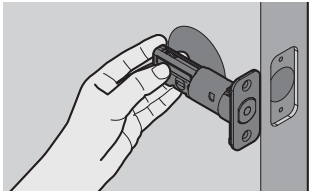

Hold the latch in front of the door hole, with the latch face flush against the door edge. Is the slotted hole centered in the door hole?

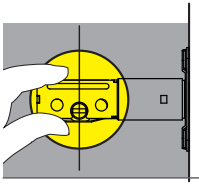

YES

No adjustment is required.
Proceed to next step.

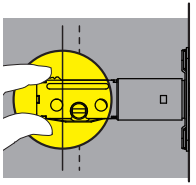

NO

Slotted hole is NOT centered.

Rotate and pull the latch as shown to extend latch.

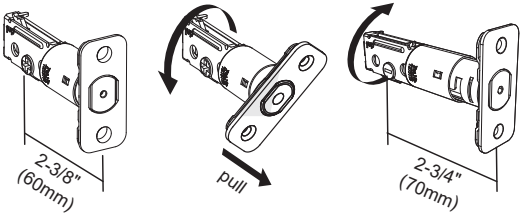

B Install the latch

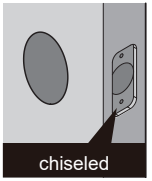

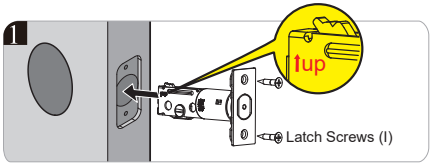

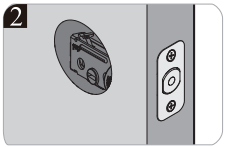

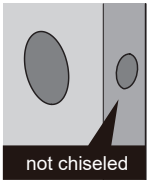

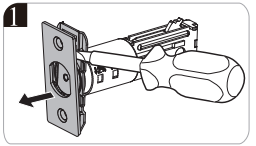

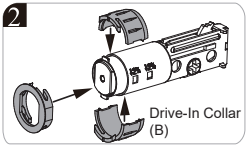

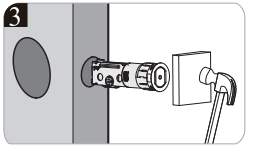

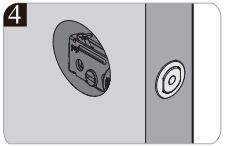

STEP

2 Install the latch and strike

C **Use a screwdriver to test if deadbolt works smoothly.**

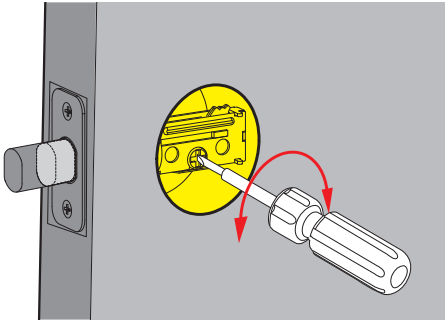

D **Install strike on the door frame.**

IMPORTANT:

Make sure the hole in door frame is drilled a minimum of 1" (25mm) deep.

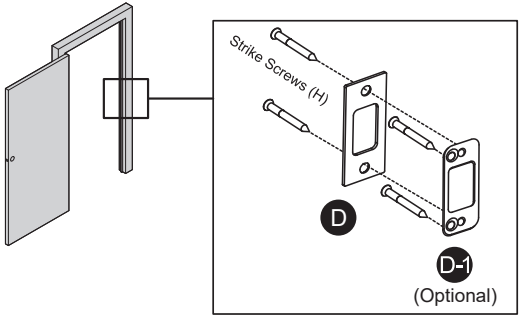

STEP

3 Install exterior assembly

IMPORTANT:

Before installation, make sure the latch is fully retracted (in the unlocked position)

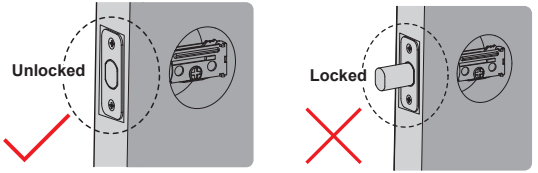

A Measure the diameter of the hole in the door.

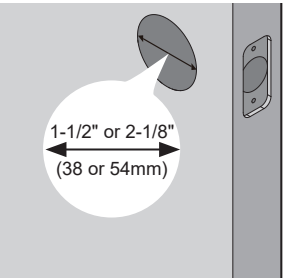

1-1/2" (38mm)

Remove the spacer

2-1/8" (54mm)

Proceed to next step

B Route the cables below the latch, and insert the torque blade through the slot in the latch.

Note: Please be sure the rubber ring is attached on the exterior assembly, which ensure the lock is waterproof.

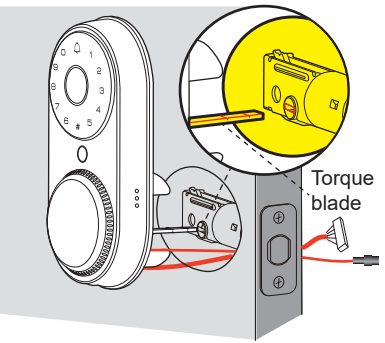

C Secure the mounting plate with the supplied screws.
Short Mounting plate screws are applied to the door with thickness of 35mm-45mm. Long Mounting screws are applied to the door with thickness of 45mm-50mm. Do not overtighten screws.

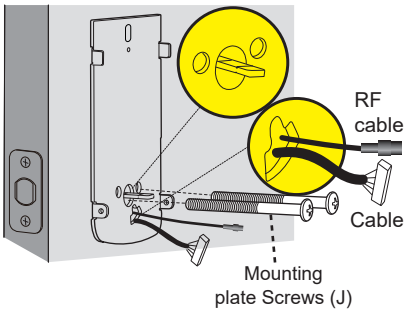

STEP

4 Install interior assembly

A Press the battery cover button on the top and remove from right and left sides.

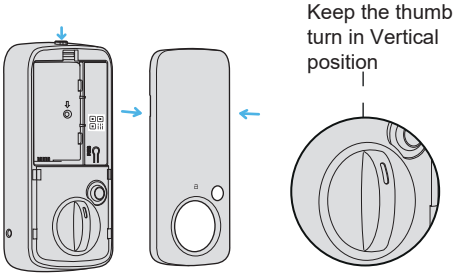

B Firstly insert the cable connector to the socket. Push the connector in firmly and completely.
Then connect RF cable with each other.

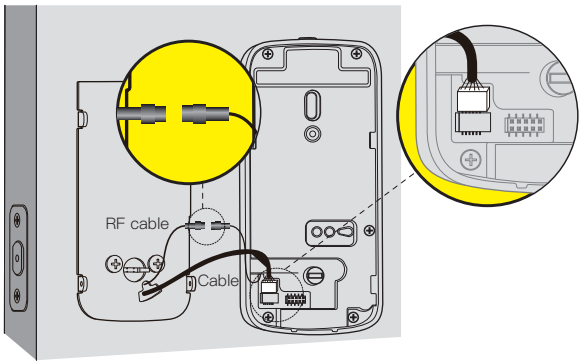

C Keep the thumb turn in vertical position, push the cable and RF cable back to the hole of the mounting plate and install the interior assembly.

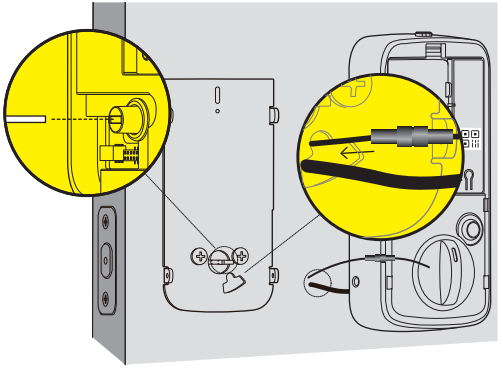

D Secure the interior assembly with 3 screws.

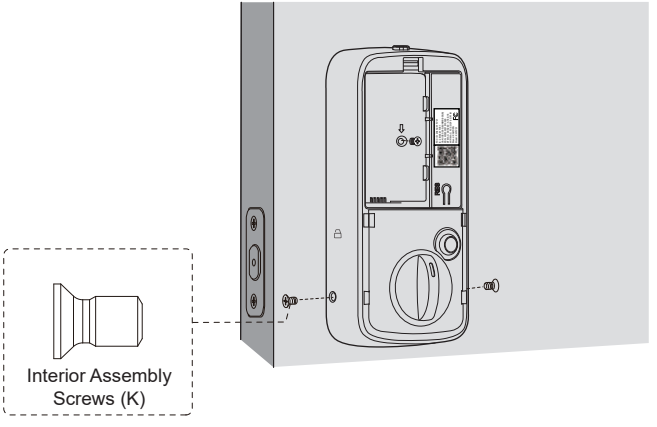

E Load the Li-battery into the battery compartment.

Note: Do not install the battery cover, until you have scanned the QR code via KK Home App to add it to the device list.

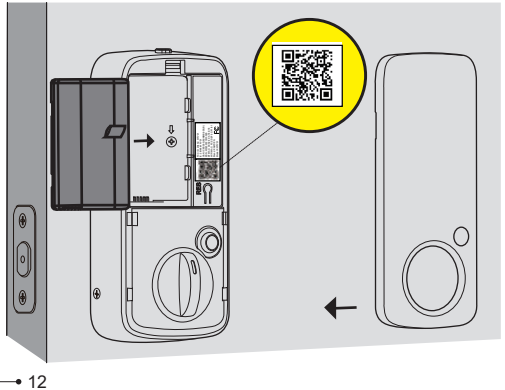

STEP

5 Install Door Sensor

IMPORTANT: Door sensor should be mounted within 1'' (25mm) from the edge of your door, within 1"(25mm) from the top of the interior assembly.

Method 1

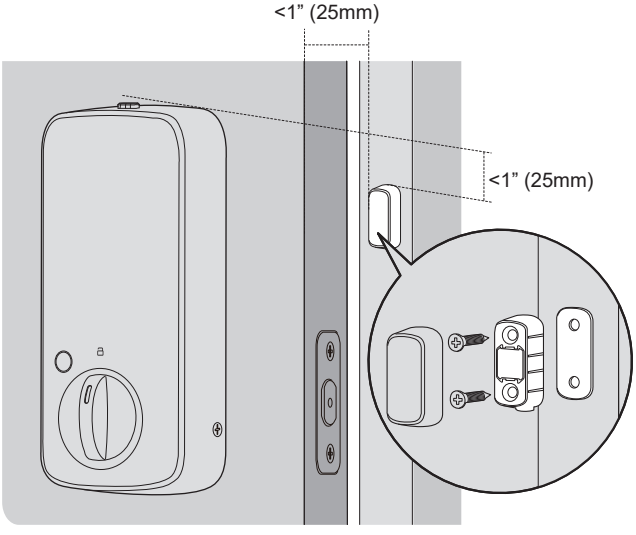

Method 2

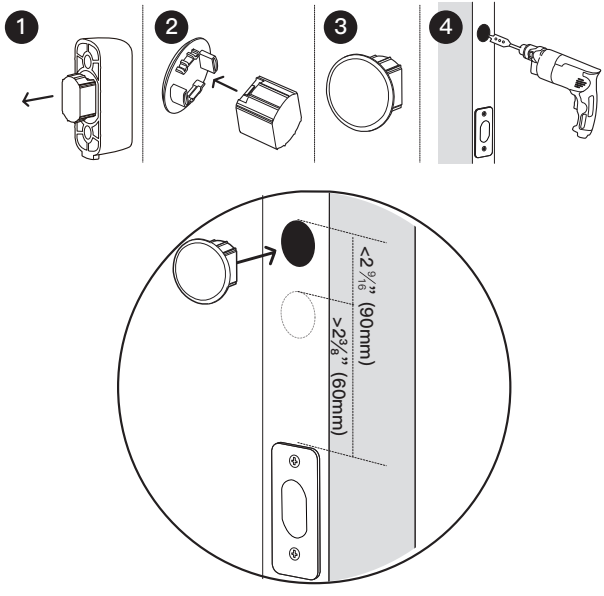

STEP

6 Add Chime (Optional)

A. In KK Home App, Go to the device to add Chime, “Settings”➡“Accessory” ➡“Add Accessories” or “+”.

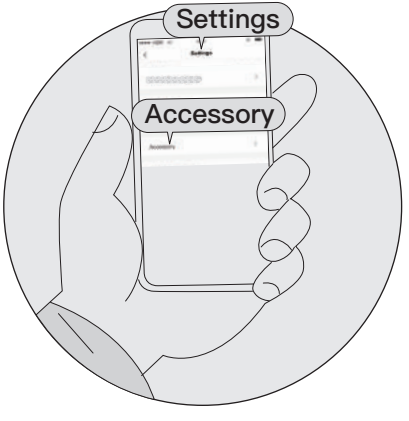

B. Press and hold the button on the Chime for 5 seconds to enter pairing mode.

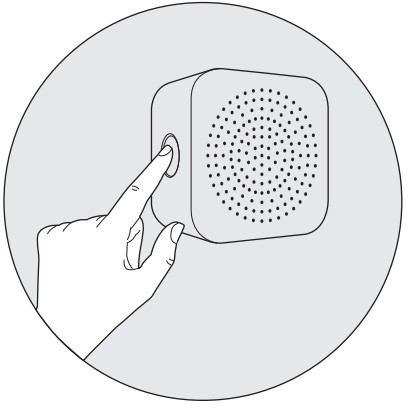

C. Follow the prompt instructions in App to complete the process.

Download KK Home App

Download KK Home App from the App store or Google Play.

Scan QR code to download
KK Home App

Download on the App Store

GET IT ON Google Play

Quick Set Up Tips

- Register an account in KK Home App
- Scan QR code on the inside panel to add KWFV01 to the device list
- Follow the setup steps to get started.

⚠ IMPORTANT:

- The Auto Lock is disabled by default, please complete the set up process and enable Auto Lock in App.
- The administrator of the lock will be the first account to bind it by default. The administrator account have access to manage users of the lock.
- To reset the smart lock, please press and hold the Reset button on the interior panel for 5 seconds.
  Log in the App with Administrator account, go to setting and unbind the lock. (This step is required, if the administrator account didn't unbind the device, the lock won't be able to be repaired by other accounts.)

FCC Statement

This equipment has been tested and found to comply with the limits for a Class B digital device, pursuant to part 15 of the FCC Rules. These limits are designed to provide reasonable protection against harmful interference in a residential installation. This equipment generates, uses and can radiate radio frequency energy and, if not installed and used in accordance with the instructions, may cause harmful interference to radio communications. However, there is no guarantee that interference will not occur in a particular installation. If this equipment does cause harmful interference to radio or television reception, which can be determined by turning the equipment off and on, the user is encouraged to try to correct the interference by one or more of the following measures:

- Reorient or relocate the receiving antenna.
- Increase the separation between the equipment and receiver.
- Connect the equipment into an outlet on a circuit different from that to which the receiver is connected.
- Consult the dealer or an experienced radio/TV technician for help.

Caution: Any changes or modifications to this device not explicitly approved by manufacturer could void your authority to operate this equipment.

This device complies with part 15 of the FCC Rules. Operation is subject to the following two conditions: (1) This device may not cause harmful interference, and (2) this device must accept any interference received, including interference that may cause undesired operation.

RF Exposure Information

This equipment complies with FCC radiation exposure limits set forth for an uncontrolled environment. This equipment should be installed and operated with minimum distance 20cm between the radiator and your body.

ISED Statement

English:This device contains licence-exempt transmitter(s)/receiver(s) that comply with Innovation, Science and Economic Development Canada's licence-exempt RSS(s). Operation is subject to the following two conditions:
(1) This device may not cause interference.
(2) This device must accept any interference, including interference that may cause undesired operation of the device.
The digital apparatus complies with Canadian CAN ICES-3 (B)/NMB-3(B).
French: Cet appareil contient des émetteurs/récepteurs exempts de licence qui sont conformes aux RSS exemptés de licence d'Innovation, Sciences et Développement économique Canada.
L'exploitation est soumise aux deux conditions suivantes :
(1) Cet appareil ne doit pas provoquer d'interférences.
(2) Cet appareil doit accepter toute interférence, y compris les interférences susceptibles de provoquer un fonctionnement indésirable de l'appareil.
l'appareil numérique du ciem conforme canadien peut - 3 (b) / nmb - 3 (b).
This device meets the exemption from the routine evaluation limits in section 2.5 of RSS 102 and compliance with RSS 102 RF exposure, users can obtain Canadian information on RF exposure and compliance.
cet appareil est conforme à l'exemption des limites d'évaluation courante dans la section 2.5 du cnr - 102 et conformité avec rss 102 de l'exposition aux rf, les utilisateurs peuvent obtenir des données canadiennes sur l'exposition aux champs rf et la conformité.
This equipment complies with Canada radiation exposure limits set forth for an uncontrolled environment.
Cet équipement est conforme aux limites d'exposition aux rayonnements du Canada établies pour un environnement non contrôlé.
This equipment should be installed and operated with minimum distance 20cm between the radiator & your body.
Cet équipement doit être installé et utilisé à une distance minimale de 20 cm entre le radiateur et votre corps.

Warnings

Failure to follow the below instructions could result in damage to the product and void the factory warranty.

This manufacturer advises that no lock can provide complete security by itself.

This lock may be defeated by forcible or technical means, or evaded by entry elsewhere on the property.

No lock can substitute for caution, awareness of your environment, and common sense.

Product Care:

- This lockset is designed to provide the highest standard of product quality and performance. Care should be taken to ensure a long-lasting finish. When cleaning is required, use a soft, damp cloth. Using lacquer thinner, caustic soaps, abrasive cleaners or polishes could damage the coating and result in tarnishing.
- Avoid exposure to direct sunlight. Long-term exposure to direct sunlight may damage the lock.

Do not install batteries until the lock is completely installed on door.

- User Pin Codes: Can be 4-10 digits and can be set up in KK Home App.
- Door sensor calibration: To calibrate your door, please follow the instruction in App step by step. Once it’s calibrated successfully, you could try detect the status of your door in KK Home.
- Share your device: Share your device means that you share the access to track the device with your other users, please be aware of the potential risks it may cause.