VisiFerm™ mA Sensors

Operating Instructions

HAMILTON®

TABLE OF CONTENTS

Table of Contents

1 General Information 4
1.1 Intended Use 4
1.2 About this Operating Instruction 4
2 Liability 4
3 Safety Precautions and Hazards 5
3.1 General Precautions 5
3.2 Operation of VisiFerm mA Sensor 5
3.3 Instructions for Use in Potentially Explosive Atmospheres 7
3.3.1 General Conditions for Safe Operation 7
3.3.2 Earthing 9
3.4 Electrical Safety Precautions 10
3.5 Chemical, Radioactive or Biological Hazard Precautions 11
4 Product Description 11
4.1 General Description 11
4.2 Hardware Description 12
4.3 Optical DO measurement 13
4.4 VisiFerm mA with Micro-Transmitter inside 13
5 Installation 13
5.1 Unpacking 13
5.2 Configuring the VisiFerm mA with ArcAir Application 14
5.2.1 Installing ArcAir Basic on the Computer 14
5.2.2 Connecting the VisiFerm mA Sensor to ArcAir 14
5.2.3 Create User Accounts 15
5.2.4 Configuring the VisiFerm mA Sensor Parameters 15
5.2.5 Configuring the calibration settings 16
5.2.6 Configuring the temperature settings of SIP / CIP process 17
5.2.7 Configuring the analog interface for your process control system 17
5.2.8 Defining a measuring point name for identification of the process 18
5.3 Install VisiFerm mA in your Measuring Loop 18
5.3.1 Mechanical Process Connection 18
5.3.2 M12 Pin Designation 18
5.3.3 Required Power Supply 19
5.3.4 Electrical Connection for HART Communication 19
5.3.5 Electrical Connection for Analog 4-20mA Communication 20
6 Operation 21
7 Maintenance 22
7.1 Verify Sensor Status and ODO Cap Functionality 22
7.2 Replacing the ODO Cap 23
7.3 Calibration 23
7.3.1 Automatic Standard Calibration with ArcAir 23
7.3.2 Calibration in Air (Calibration Point Air) 24
7.3.3 Zero Point Calibration (Point Zero Oxygen) 24
7.4 Product calibration 25
7.5 Cleaning 26
8 Troubleshooting 27
8.1 Sensor Self-Diagnostic 27
8.1.1 Warnings 27
8.1.2 Errors 28
8.2 Getting Technical Support 29
8.3 Returning VisiFerm mA for Repair 29
9 Disposal 29
10 Bluetooth Certification 29
11 Ordering Information 30
11.1 VisiFerm mA 30
11.2 Parts and Accessories 32
11.3 Arc Services 35

Hamilton Warranty

Please refer to the General Terms of Sales (GTS).

Important note

Copyright © 2020 Hamilton Bonaduz AG, Bonaduz Switzerland. All rights reserved. The reproduction of any part of this document in any form is forbidden without the express written agreement of Hamilton Bonaduz AG.

Contents of this document can be modified without previous announcement. Technical modifications reserved. Greatest possible care was used on the correctness of the information in this document. If errors should be discovered nevertheless, Hamilton Bonaduz AG is pleased to be informed about it. Regardless of this, Hamilton Bonaduz AG cannot assume liability for any errors in this manual or for their consequences.

1 General Information

1.1 Intended Use

The VisiFerm mA sensors are intended for the measurement of dissolved oxygen (DO) and oxygen in gas phase (dust environment). The VisiFerm mA sensor is certified for use in explosive atmosphere. If these sensors are used in explosive atmospheres, the instructions in the chapter 3.3 must be followed.

If the sensor is used in contact with gaseous or liquid organic solvents, the resulting measurement accuracy in this application must be separately checked and validated by the customer.

⚠ ATTENTION! The VisiFerm mA sensor has a built-in temperature sensor (NTC 22kΩ). This temperature sensor is to be used only for monitoring the sensor conditions, not for controlling the process temperature.

⚠ ATTENTION! The measurement values transmitted over wireless communication are not intended to be used for process control.

⚠ ATTENTION! The VisiFerm mA sensor can only be autoclaved with the corresponding autoclavation cap.

1.2 About this Operating Instruction

These Operating Instructions are designed to support the integration, operation and qualification of the VisiFerm mA sensors.

To achieve this, it will describe the features of VisiFerm mA and its integration in Process Control Systems (PCS). Both the hardware and the communication between the VisiFerm mA and Process Control Systems are detailed in this manual. After reading this manual the user should be capable of installing and operating VisiFerm mA sensors.

⚠ ATTENTION! Essential information for avoiding personal injury or damage to equipment.

NOTE: Important instructions or interesting information.

2 Liability

The liability of Hamilton Bonaduz AG is detailed in the document «General Terms and Conditions of Sale and Delivery».

Hamilton is expressly not liable for direct or indirect losses arising from use of the sensors. It must in particular be insured in this conjunction that malfunctions can occur on account of the inherently limited useful life of sensors contingent upon their relevant applications. The user is responsible for the calibration, maintenance and regular replacement of the sensors. In the case of critical sensor applications, Hamilton recommends using back-up measuring points in order to avoid consequential damages. The user is responsible for taking suitable precautions in the event of a sensor failure.

NOTE: The VisiFerm mA sensor is not intended and specified as a safety device. A SIL (Safety Integrity Level) certification is not available. It is in the sole responsibility of the user to validate the VisiFerm mA sensor according the safety requirements of his application.

3 Safety Precautions and Hazards

⚠ ATTENTION! Read the following safety instructions carefully before installing and operating the VisiFerm mA sensor.

3.1 General Precautions

For safe and correct use of VisiFerm mA, it is essential that both operating and service personnel follow generally accepted safety procedures as well as the safety instructions given in this document, the VisiFerm mA operating instructions.

The specification given in the «Specification Sheet» as regards temperature, pressure etc. may under no circumstances be exceeded. Inappropriate use or misuse can be dangerous.

The lifetime of the VisiFerm mA highly depends on the specific conditions of the application. Temperature, pressure, chemicals used may accelerate the ageing of both the sensor and its ODO cap. See chapter 7 for maintenance.

Cleaning, assembly and maintenance should be performed by personnel trained in such work. Before removing the sensor from the measuring setup, always make sure that no process medium can be accidentally spilled. When removing and cleaning the sensor, it is recommended to wear safety goggles and protective gloves.

The sensor can not be repaired by the operator and has to be sent back to Hamilton for inspection.

Necessary precautions should be taken when transporting the sensors. For repair or shipment the sensor should be sent back in the original reusable packaging box. Every VisiFerm mA sent back for repair must be decontaminated.

If the conditions described in these operating instructions are not adhered to or if there is any inappropriate interference with the equipment, all of our manufacturer's warranties become obsolete.

3.2 Operation of VisiFerm mA Sensor

When using the VisiFerm mA sensors in process environment suitable protective clothing, safety glasses and protective gloves must be worn, particularly when dealing with a malfunction where

SAFETY PRECAUTIONS AND HAZARDS

the risk of contamination from spilled liquids exists. Installation and maintenance of sensors must be performed only by trained personnel. The mobile devices and sensors must be used for their intended applications, and in optimum safety and operational conditions.

Use only wired digital or analog connection for the process control. The Arc wireless interface is designed for sensor monitoring, maintenance and service purposes.

Make sure that the PG13,5 thread and the O-ring are not damaged when screwing the sensor into the process. O-rings are consumable parts which must be exchanged regularly (at least once per year). Even when all required safety measures have been complied with, potential risks still exist with respect to leaks or mechanical damage to the armature. Wherever there are seals or screws, gases or liquids may leak out undetected. Always make sure that no process medium can be accidentally spilled before removing the sensor from its measurement setup. Make sure that no air or gas bubbles sticks to the sensitive part of the sensor. As a consequence, the measurement value could be unstable. Do not put stress on the system by vibration, bending or torsion. Before use, verify that the sensor is properly configured for your application.

Failure to observe and carry out the maintenance procedures may impair the reliability and correct functioning of the measurement system.

⚠ ATTENTION! When unscrewing the PG 13,5 thread connection never turn the sensor at the connector head because you can loosen the ODO Cap from the sensor shaft and fluid can reach the interior of the sensor.

⚠ ATTENTION! To avoid humidity problems, make sure that the ODO Cap and protection cap is always attached firmly to the sensor, and that the O-ring between the shaft or M12 connector and cap is undamaged.

The integrated 4–20 mA analog output has been configured according to factory defaults. You can find full details, including serial number and most important specifications, on the certificate provided with each sensor. Before use, verify that the sensor is properly configured for your application.

Make sure that following cross sensitivities and resistances of ODO Caps are respected.

Cross sensitivities and resistances of ODO Cap H3	
Wetted parts resistant to	Standard cleaning and disinfectant solutions (NaOH, active chlorine, chlorine dioxide) Organic solvents such as Ethanol, Acetone, THF
Wetted parts not resistant to	Ozone Lipophilic compounds

Cross sensitivities and resistances of ODO Cap H4	
Wetted parts resistant to	Lipophilic compounds Standard cleaning and disinfectant solutions (NaOH, active chlorine, chlorine dioxide) Organic solvents such as Ethanol, Acetone, THF
Wetted parts not resistant to	Ozone

If the sensor is used in contact with gaseous or liquid organic solvents, the resulting measurement accuracy in this application must be separately checked and validated by the customer.

3.3 Instructions for Use in Potentially Explosive Atmospheres

The VisiFerm mA sensor is certified for use in explosive atmosphere with following Marking:

CE 0035 Ex II 1 G Ex ia IIC T3/T4/T5/T6 Ga
CE 0035 Ex II 1 D Ex ia IIIC T135°C Da

Hamilton Bonaduz AG, CH-7402 Bonaduz, Switzerland

ATEX EC-type Examination Certificate: TüV 18 ATEX 8236X
IECEx Certificate of Conformity: IECEx TUR 19.0050X

The certificates and the declaration of conformity can be downloaded from www.hamiltoncompany.com

3.3.1 General Conditions for Safe Operation

Conditions described in the ATEX EC-Type Examination Certificate or the IECEx Certificate of Conformity must be adhered to.

The operator of equipment in potentially explosive atmospheres is responsible for ensuring that all components of the system are certified for that area classification and are compatible with each other. The regulation of erection (e.g. IEC 60079-10) which apply to systems and plants used in potentially explosive atmospheres have to be strictly adhered to. Perform regular visual inspection of the sensor, its installation and cable for intactness and correct operational conditions.

If the sensor is being operated in gas atmosphere, the following process and ambient temperatures have to be observed:

Temperature Class	Process and Ambient Temperature range [$T_{a/p}$]
T3	-20 °C ≤ $T_{a/p}$ ≤ 130 °C
T4	-20 °C ≤ $T_{a/p}$ ≤ 110 °C
T5	-20 °C ≤ $T_{a/p}$ ≤ 80 °C
T6	-20 °C ≤ $T_{a/p}$ ≤ 35 °C

If the sensor is being operated in dust environment, the following process and ambient temperature have to be observed:

SAFETY PRECAUTIONS AND HAZARDS

Maximum input power Pi	Process and Ambient Temperature range [$T_{a/p}$]	
750 mW	-20 °C ≤ $T_{a/p}$ ≤ 115 °C	T 135 °C

If the sensor is electrically disconnected, the following temperature has to be observed for the process.

Temperature Class	If the sensor is electrically disconnected
T3	-20 °C ≤ T_s ≤ 130 °C
T4	-20 °C ≤ T_s ≤ 130 °C
T5	-20 °C ≤ T_s ≤ 130 °C
T6	-20 °C ≤ T_s ≤ 80 °C

The operator has to ensure protection against lightning in compliance with the locally applicable regulations. Along to the intrinsically safe circuit potential equalization has to be provided, because in case of a fault the intrinsically safe circuit has to be regarded as connected to the metal housing.

Intense vapor or dust directly impacting on the cable must be avoided when the cable is running through zones of category 1G, 1D or 2D. Assembly and maintenance are to be done only if the atmosphere is Ex-free and according to the current local regulations. After maintenance works have been performed all barriers and notes remove for that purpose have to be put back in their original place.

The sensor has to be powered with a power supply unit with an intrinsically safe output circuit of Ex ia IIC. For the selection, consider the conditions stated in EN 60079-25. This is also applicable for operation of the sensor in non-ex environment. The Sensor Power Cable M12 is intended to be used in laboratory non ex environment.

The maximal input parameters of the sensor operated in gas atmospheres:

Description	Units	Limited value
Max. Input Sensor Voltage	U_i	30 V (DC)
Max. Input Sensor Current	I_i	100 mA
Max. Input Sensor Output	P_i	750 mW
Input Sensor Capacitance	C_i	≤ 0.6 nF
Input Sensor Inductance	L_i	negligible

The maximal input parameters of the sensor operated in dust atmospheres:

Description	Units	Limited value
Maximum input voltage	U_i	30 V (DC)
Maximum input current	I_i	100 mA
Maximum input power	P_i	750 mW
Maximum internal capacity	C_i	≤ 0.6 nF
Maximum internal inductivity	L_i	negligible

Hamilton recommends the following power supply units:

Description	Ordering Information (Type)
Pepperl + Fuchs	KCD2-STC-Ex1
Pepperl + Fuchs	KFD2-STC4-Ex1
Phoenix Contact MACX	MCR-EX-SL-RPSSI-I-UP

NOTE: The table above is only a recommendation. Hamilton is not responsible for changes in the specifications of the power supply units.

⚠ ATTENTION! In case the sensor is not working correctly disconnect the sensor immediately from the power supply.

3.3.2 Earthing

The sensor has to be mounted at the mounting location electrostatically conductive (< 1MΩ). It is recommended to assign the sensor shaft and/or M12 cable shield to ground or earth especially in electromagnetically noisy environments. This significantly improves noise immunity and signal quality. The M12 thread is connected to the metallic housing of the VisiFerm mA sensor. Two options for connecting the sensor to the process environment are available.

Option 1: The Metal tank is connected to earth

The sensor shaft is connected to the metal tank over the PG 13,5 thread. Do not connect the green yellow shield wire of the M12 cable to earth. It must remain unconnected and can be cut off.

Figure 1: Metal tank with earth connection

NOTE: If the tank is not connected to earth, Option 2 has to be applied.

Option 2: Glass or plastic tank (not connected to earth)

The glass or plastic tank has no connection to earth and therefore it is necessary to connect the sensor shaft via a screw clamp to earth.

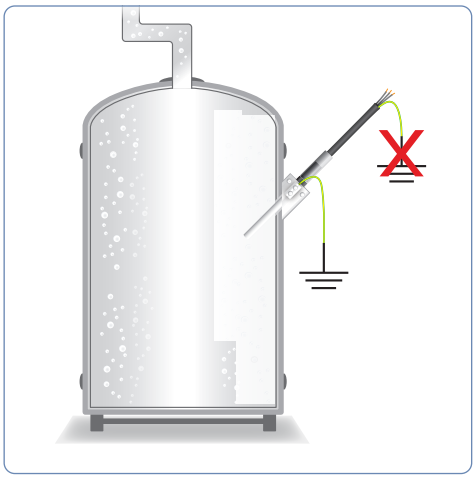

Figure 2: Glass or plastic tank with no earth connection

Below are shown several examples how to connect the shaft of the sensor directly to earth as required in Figure 2.

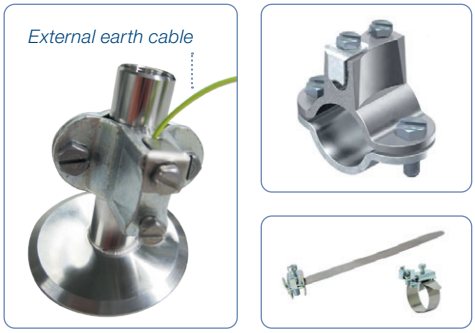

Figure 3: Example clamps for connecting the earth to armature and metallic housing of the tank

3.4 Electrical Safety Precautions

Do not connect the sensor to a power source of any voltage beyond the range stated in the Technical Specifications (www.hamiltoncompany.com).

Always use Hamilton M12 cables for safe connection. Cables are available in a broad range of lengths (Chapter 10). Make sure the cable is intact and properly plugged to avoid any short circuit.

Keep VisiFerm mA away from other equipment which emits electromagnetic radio frequency fields, and minimize static electricity in the immediate environment of the optical measuring parts. Carefully follow all the instructions in chapter 5.3 to avoid electrical damage to the sensor. The contacts must be clean and dry before sensor is connected to the cable.

⚠ ATTENTION! Switch off the power supply and unplug the connector before dismounting the VisiFerm mA.

⚠ ATTENTION! If the power supply (220 VAC/24VDC) is switched off or disconnected the reading on the PCS is wrong.

3.5 Chemical, Radioactive or Biological Hazard Precautions

Selection of the appropriate safety level and implementation of the required safety measures for working with VisiFerm mA is the sole responsibility of the user.

If working with hazardous liquids observe and carry out the maintenance procedures, paying particular attention to cleaning and decontamination. If VisiFerm mA becomes contaminated with biohazardous, radioactive or chemical material, it should be cleaned. Failure to observe and carry out the maintenance procedures may impair the reliability and correct functioning of the measuring module.

4 Product Description

4.1 General Description

The VisiFerm mA is an optical dissolved oxygen (DO) sensor for use in explosive environment. With their integrated transmitter, VisiFerm mA sensors enable direct communication to the process control system via 2 wire 4-20 mA standard signal or digital HART. Wireless communication directly from the sensor may be used for monitoring, configuration and calibration, and saves time without compromising the quality of the wired connection. The sensor features furthermore an integrated Bluetooth 5, enabling in this way wireless encrypted data exchange with mobiles (Android and iOS).

VisiFerm mA optical technology improves the measuring performance and simplifies maintenance. Improvements compared to conventional electrochemical (amperometric) sensors include flow independence, rapid start-up with no polarization time, and simplified maintenance.

With the transmitter integrated, VisiFerm mA sensors provide more reliable measurements directly to your process control system. The µ-transmitter located in the sensor head stores all relevant sensor data, including calibration and diagnostic information, simplifying calibration and maintenance. The integrated quality indicators predicts the remaining sensor and cap lifetime.

Key benefits include:

- Optical measurement in explosive environment with ATEX / IECEx certification
- No separate transmitter needed
- Simple maintenance with robust industrial design
- Easy to install 2-wire connection
- Direct analog or digital HART communication to the process control system via 2 wire 4-20 mA standard signal.
- Full online wireless option via Bluetooth 5 for easy monitoring, configuration and calibration
- Encrypted data exchange with mobiles (Android & iOS)

4.2 Hardware Description

The VisiFerm mA sensor consists of a sensor head with integrated electronic and a sensor shaft in contact with the measured medium. The sensor shaft is terminated by the optical dissolved oxygen (ODO) cap, carrying the oxygen sensitive luminophore. During development, special attention was paid to an optimum sanitary design.

Sensor status LED of the sensor:

LED Status	Case
All LEDs light up shortly one by one in a circle	Power Up
Green LEDs are flashing	Ready to operate, no errors or warnings have been registered
Yellow LEDs are flashing	Warning, minimum one warning is active
Red LEDs are flashing	Error, minimum one error is active
All LEDs light up slowly one by one in a circle	Wireless communication to ArcAir is active

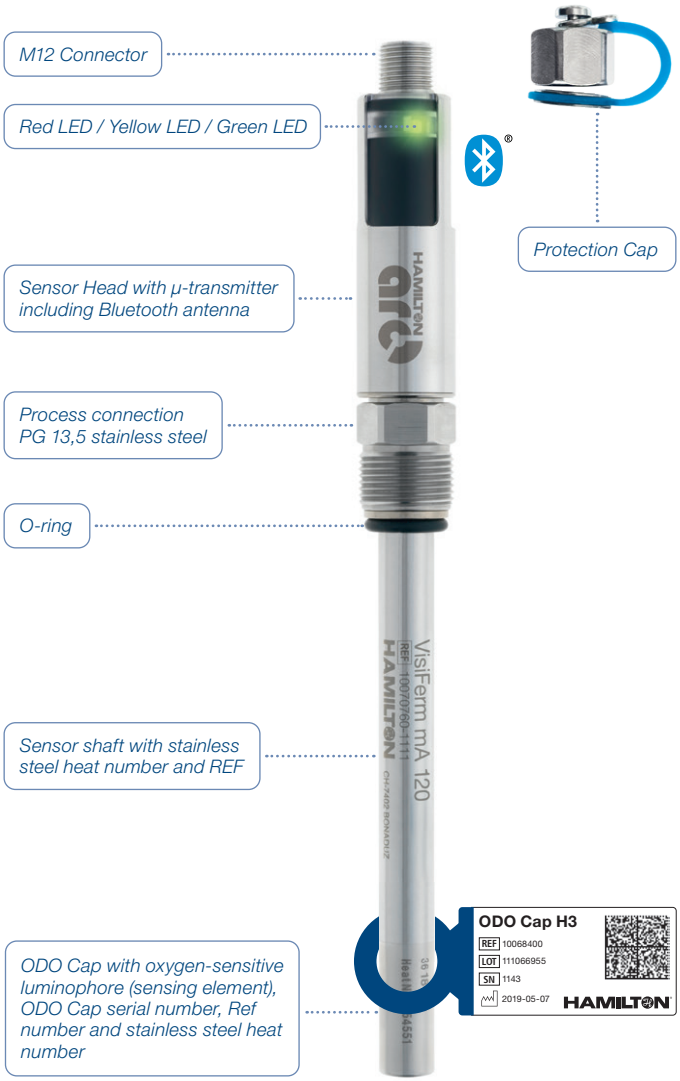

Figure 4: VisiFerm mA description

4.3 Optical DO measurement

The optical measurement principle is based on the so-called luminescence quenching. The luminescence of certain organic pigments (luminophore) is quenched in the presence of oxygen. The luminophore absorbs the excitation light and release a part of the absorbed energy by emission of fluorescence. In the presence of oxygen, energy transfer takes place from the excited luminophore to oxygen. The luminophore does not emit fluorescence and the measurable fluorescence signal decreases.

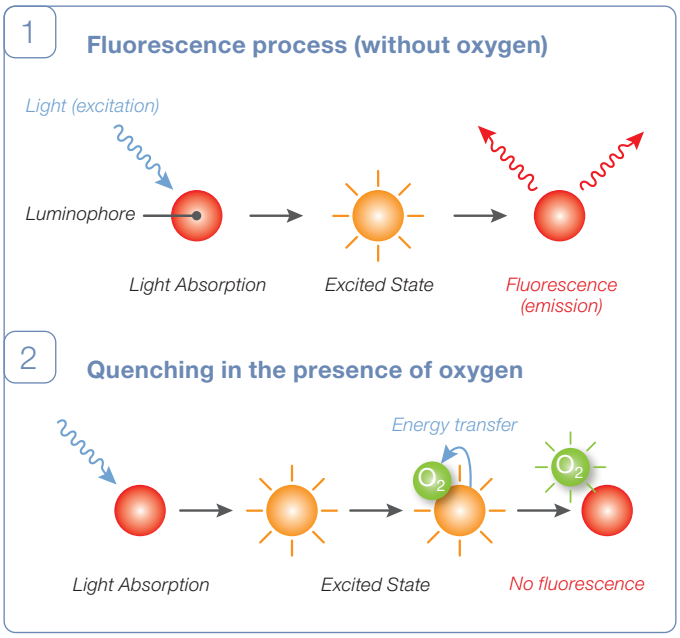

Figure 5: Fluorescence quenching by oxygen

4.4 VisiFerm mA with Micro-Transmitter inside

With the micro-transmitter integrated, VisiFerm mA sensors offer fully compensated signal directly to the process control system. Communication protocols include standard analog 4–20 mA or digital HART. The micro-transmitter located in the sensor head stores all relevant sensor data, including calibration and diagnostic information, simplifying calibration and maintenance.

5 Installation

5.1 Unpacking

1) Unpack carefully the VisiFerm mA sensor.
   Enclosed you will find the VisiFerm mA sensor, the Declaration of Quality, the VisiFerm mA Operating Instructions, and the Stainless Steel Inspection Certificate.
2) Inspect the sensor for shipping damages or missing parts.

INSTALLATION

5.2 Configuring the VisiFerm mA with ArcAir Application

VisiFerm mA sensors require application specific configuration. Following parts are required to configure and calibrate Arc sensors:

- Arc View Mobile (Ref 243690) or ArcAir computer Software Solution.
- External Power supply with Sensor Power Cable M12 (Ref 355288).

To configure and set up the VisiFerm mA sensors at least ArcAir Basic is required. Below in this table you will find the different ArcAir licenses and its functionality:

ArcAir	Read	Calibrate	Configure	Documentation
Free	✓	–	–	–
Basic	✓	✓	✓	–
Advanced	✓	✓	✓	✓

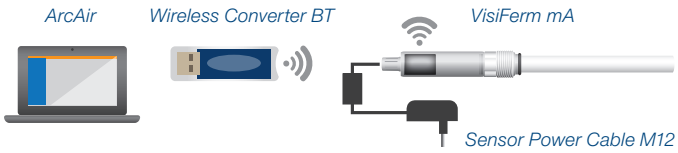

Figure 6: VisiFerm mA configuration with ArcAir

NOTE: For more detail information and configuration see Hamilton Arc System Operating Instructions.

5.2.1 Installing ArcAir Basic on the Computer

1) Download the Zip file «ArcAir» from the Hamilton webpage www.hamiltoncompany.com (search for ArcAir)
2) Unpack the ZIP-File
3) Do not plug in the Wireless Converter before the installation of ArcAir is completed
4) Install «ArcAir» by double clicking «ArcAir.exe» and follow the instructions on the screen

5.2.2 Connecting the VisiFerm mA Sensor to ArcAir

1) Connect a sensor with the power supply, e.g. Sensor Power Cable M12 Ref 355288
2) Switch on the mobile's Bluetooth connection or connect a Wireless Converter BT to USB Port of your computer (only for wireless connection)
3) The ArcAir application recognizes and displays the connected sensors automatically

⚠ ATTENTION! For automatic sensor login a unique and global Operator Level S password for all intelligent sensors is required. Please make sure you have added the same Operator Level S Password for all Arc sensors in the ArcAir application under Backstage/Settings/Operator Level S Password.

5.2.3 Create User Accounts

1) Start ArcAir application on computer
2) Click on «Backstage» left upper corner
3) Select «User Management»
4) Click the «Add» Button for opening the user editor
5) Type in the user details and password
6) Select the specific rights for the user

⚠ ATTENTION! First user is the administrator and all user rights are assigned as default.

NOTE: Initial operation of ArcAir is in the laboratory mode as long as no user account is created. Laboratory mode does not require a login password and enable all features in the installed license version.

5.2.4 Configuring the VisiFerm mA Sensor Parameters

1) Start the ArcAir application
2) Select the desired sensor
3) Open the drawer «Settings» (make sure you have the «Sensor Settings» user right)
4) Configure the sensor

   A description of the available settings is given below:

Parameter Name	Description	Default Value	Configuration	Location
DO Unit	These are the measurement physical units	%vol. %sat. ug/l ppb mg/l ppm mbar ppm gas*	Required	Measurement/ Values
T unit	These are the temperature physical units	K °F °C	Required	Measurement/ Values
Salinity	The concentration of dissolved oxygen in saturated water is dependent on the salinity	0 mS/cm	Default parameter recommended	Measurement/ Parameter

**humidity set to 0%*

INSTALLATION

Parameter Name	Description	Default Value	Configuration	Location
Pressure	The partial pressure of oxygen is proportional to the atmospheric pressure or the pressure of the air supply to the process	1013 mbar	Required, application dependent	Measurement/ Parameter
Humidity	The concen-tration of dissolved oxygen in gas phase is dependent on the humidity	100%	Must	Measurement/ Parameter
Measuring interval	The measuring interval can be set between 1-300 sec. The LED flashes once in the set measure interval	3 sec.	Recommended default parameter	Measurement/ Parameter
Moving average	The sensor uses a moving average 1-30 over the mea-suring points	10	Recommended default parameter	Measurement/ Parameter
Sensing Material	Sensing Material are different types of ODO Cap which can be set by entering the REF of the ODO Caps	10068400 (ODO Cap H3) or 10078261 (ODO Cap H4)	Must (if changing the cap type)	Measurement/ Parameter
Resolution	The resolution interval can be set between 0-16. The mea-suring interval is on itself an average over 0-16 individual sub-measure-ments.	8	Recommended default parameter	Measurement/ Parameter

5.2.5 Configuring the calibration settings

Parameter Name	Description	Default Value	Configuration	Location
Drift DO	High drift will interrupt the calibration process. Warning comes up «drift oxygen»	0.05%/min	Recommend default parameter	Calibration/ Calibration Settings
Drift T	High drift will interrupt the calibration process. War-ning comes up «drift temperature»	0.5 K/min	Recommend default parameter	Calibration/ Calibration Settings

5.2.6 Configuring the temperature settings of SIP / CIP process

Parameter Name	Description	Default Value	Configuration	Location
Customer temperature range	User defines temperature range for DO reading. No DO reading above 85°C possible	-20°C – 85°C	Recommend default parameter	Status/ Quality, Counters and Tempe-ratures
SIP process definition	User defines conditions for the SIP counter	Temp. min: 120°C Temp. max. 140°C Time: 20min	Recommend default parameter	Status / SIP / CIP
CIP process definition	User defines conditions for CIP counter	Temp. min: 80°C Temp. max. 100°C Time: 20min	Recommend default parameter	Status / SIP / CIP

5.2.7 Configuring the analog interface for your process control system

Parameter Name	Description	Default Value	Configuration	Location
Interface Mode	The output of the 4–20 mA can be configured linear, bilinear or with a fix value	4–20 mA linear	Recommended default	Interface/ Analog
Value at 4mA	Defined measurement value for 4 mA output	0%-vol	Must application dependent	Interface/ Analog Output
Value at 20mA	Defined measurement value for 20 mA output	62.85-%vol	Must application dependent	Interface/ Analog Output
Mode in event of warning	Current output mode in case of warnings	No output	Recommended default parameter	Interface/ Analog Output
Mode in event of errors	Current output mode in case of errors	Continuous output	Recommended default parameter	Interface/ Analog Output
Output in event of warning	Current output in case of warnings	3.6 mA	Recommended default parameter	Interface/ Analog Output
Output in event of error	Current output in case of error	3.6 mA	Recommended default parameter	Interface/ Analog Output
Output for T out of limit	Current output in case of temperature out of limit	3.6 mA	Recommended default parameter	Interface/ Analog Output

INSTALLATION

5.2.8 Defining a measuring point name for identification of the process

Parameter Name	Value	Default Settings	Location	Descriptions
Measuring point	User can define a sensor name for better identification of the measuring point	10070760 XXXXYYYY*	Optional	Information / Info Userspace

**XXXX = Sensor Information (Chapter 10)*
YYYY = Sensor Serial Number

5.3 Install VisiFerm mA in your Measuring Loop

5.3.1 Mechanical Process Connection

The VisiFerm mA mechanical design is compatible with all Hamilton process housings, including Flexifits, Retractexs, Retractofits and Hygienic Sockets.

Before installing the armatures, you should test that the seal is tight and the parts are all in working order. Ensure that there is no damage to the sensor or the armature. Check whether all O-rings are in place in the appropriate grooves and are free of damage. To avoid any mechanical damage to O-rings on assembly, they should be slightly greased.

Please note that O-rings are wetted parts and greasy compounds must comply to your FDA application needs.

5.3.2 M12 Pin Designation

The VisiFerm mA sensor is fitted with a M12 male, A coded connector. The four golden contacts are denoted as pin 1 to pin 4. For easy identification of each pin the M12 has a mark between pin 1 and pin 2. Always use Hamilton M12 sensor cables for safe connection, which are available in different lengths (Chapter 10).

Figure 7: Requirements for electrical connection of VisiFerm mA sensors

NOTE: Shaft potential is isolated from the 4-20 mA + and – connection. Max isolation voltage is 500 V.

M12 PIN	Function	Color	Description
3	HART/4-20 mA +	Blue	4-20 mA two-wire interface, functions as a current sink. If there is no resistor in the HART Interface Card integrated, an external 250 Ω resistor is essential for HART communication.
2	HART/4-20 mA –	White	
4	not connected	Black	–
1	not connected	Brown	–
Housing	Shield	Green/ Yellow	Connected to the housing including the M12 female connector.

5.3.3 Required Power Supply

VisiFerm mA sensors are specified with a minimal power supply as follows:

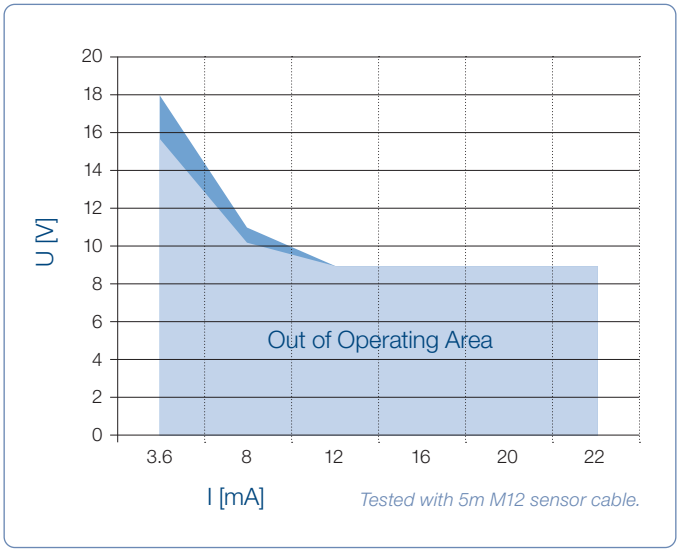

Figure 8: Minimal power supply as function of the output current.

Without HART communication *With HART communication*

5.3.4 Electrical Connection for HART Communication

VisiFerm mA sensor supports the platform-independent HART 7 and higher communication protocol. In most cases a HART resistor is already installed in the HART Interface Card of the process control system (Figure 9 A). If no resistor in the HART interface card is integrated, an external 250 Ω resistor has to be installed in series between the sensor and the process control system as described on Figure 9 B.

For more details about the HART commands and configuration please refer to the HART® Field Device Specification Ref 111001055 document available on the webpage www.hamiltoncompany.com (search for VisiFerm mA HART® Field Device Specification).

The Device Description or DD can be downloaded on the HART Communication Foundation webpage www.hartcomm.org (search for Device Descriptions / DD Library) or on the Hamilton webpage www.hamiltoncompany.com.

A

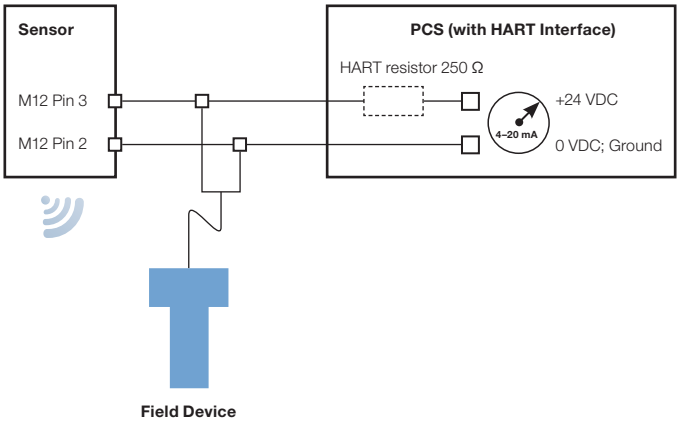

A HART resistor is available in the HART interface card.

B

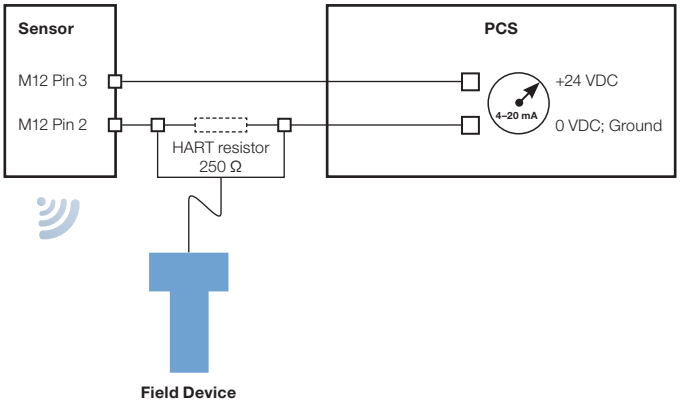

A HART resistor is required in series between the sensor and the process control system.

Figure 9: Wiring diagram for integration in the process control system

5.3.5 Electrical Connection for Analog 4-20mA Communication

The 4–20 mA interface enables direct connection of the VisiFerm mA sensor to a data recorder, indicator, control unit or PCS with analog I/O. The VisiFerm mA works as a current sink sensor and is passive. Connect the sensor according to the pin designations (Chapter 5.3.2). The 4–20 mA interface of the VisiFerm mA sensors is pre-configured with default values for the 4-20 mA range, and measurement unit. Configure the 4.20 mA interface according to your requirements for proper measurement (Chapter 5.2.4).

A

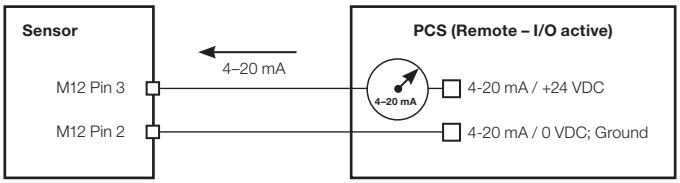

B

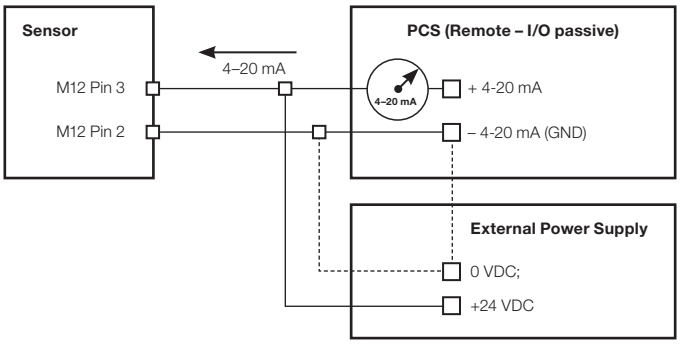

Figure 10: Two- wire loop wiring diagram for the 4-20 mA interface.

A: with an active current input card. B: with a passive current input card.

NOTE: If the current input card GND is internally connected to GND of the Power Supply you do not have to connect both GNDs externally.

6 Operation

⚠ ATTENTION! Only use the sensor within the specifications (www.hamiltoncompany.com). Failure to do so may lead to damages or measurement failure.

1) Remove the protective caps from the VisiFerm mA shaft, and from the M12 sensor head
2) Mount the O-ring on the sensor shaft and screw the ODO Cap firmly
3) Verify the functionality of the sensor including the ODO cap (Chapter 7.1)
4) Scan the barcode on the ODO Cap label with the ArcAir mobile barcode scanner or enter manually the information in the sensor/ Sensor Information.
5) Calibrate the sensor (Chapter 7.3)
6) Connect the sensor to the process control system (Chapter 5)
7) Verify the measurement in air on your control system
8) Mount the sensor to the armature or process connection (Chapter 5.3)

NOTE: No oxygen measurement is performed at a temperature higher than 85°C to protect the optoelectronics and enhanced the sensor lifetime.

⚠ ATTENTION! Please scan the barcode or enter the data into ArcAir prior first use of a replacement cap.

7 Maintenance

Periodic maintenance routines need to be run in order to ensure safe and reliable operation and measurement of sensor and the accessories.

⚠ ATTENTION! Avoid any contact of the equipment with corrosive media.

⚠ ATTENTION! Please screw the protection cap on the M12 sensor connector when disconnecting the sensor M12 cable.

7.1 Verify Sensor Status and ODO Cap Functionality

1) Power the sensor with the M12 Sensor Power Cable and connect the sensor to ArcAir
2) Control the status (Figure 11)
3) Please refer to the troubleshooting (Chapter 8) for the next steps if the traffic light is not green
4) Control the quality of the sensor, ODO cap or measurement in ArcAir under Sensor Information or Quick View / Sensor Health and change the ODO Cap or sensor if required (Chapter 7.2)

NOTE: The lifetime of the VisiFerm mA highly depends on the specific conditions of the application. Temperature, pressure, chemicals used may accelerate the ageing of both the sensor and its ODO cap. A warning «Maintenance required» remains active as long as the cap or sensor quality is below 40%. Make sure that after new cap or sensor replacement the measurement quality status is green. The measurement quality status takes sensor and cap into account.

The sensor is performing correctly.
No errors or warnings have been registered.

At least an error or a warning has been registered.
Verify the sensor errors and warnings in Sensor Status.

MAINTENANCE

No communication between the sensor and ArcAir.
This may be due to a hardware failure.

Figure 11: Description of the traffic lights on ArcAir

7.2 Replacing the ODO Cap

The exchange of ODO Cap is performed very easily:

1) Unscrew the ODO cap from the shaft (Figure 12)
2) Exchange the O-ring
3) Screw firmly the new ODO Cap onto the sensor shaft again
4) Perform sensor calibration (Chapter 7.3)

NOTE: If the ODO Cap is mounted very firmly on the shaft, and if you cannot obtain a good grip on the stainless steel with your fingers, a silicone tube between your fingers and metal may supply a better grip.

Figure 12: Replacing the ODO cap

7.3 Calibration

The VisiFerm mA sensors provide two kinds of sensor calibration: automatic standard calibration, and product calibration. The automatic standard calibration and the product calibration may be performed using ArcAir (see chapter 5.2).

7.3.1 Automatic Standard Calibration with ArcAir

VisiFerm mA sensors are calibrated at two points: in air and in an oxygen-free environment. During calibration, the sensor controls automatically the stability of the oxygen and temperature signals.

NOTE: For greater measurement accuracy ensure that temperature difference between calibration medium and process medium is minimal. Make sure you compensate humidity and pressure during calibration.

NOTE: A 2-point calibration in air and Nitrogen is only required:
- For each new ODO Cap replacement
- If high accuracy is needed

MAINTENANCE

7.3.2 Calibration in Air (Calibration Point Air)

1) Make sure temperature, humidity and pressure values are constant (Figure 13)
2) Power the VisiFerm and connect to ArcAir via the Arc Wireless Converter BT
3) Select the sensor in the sensor list
4) Open the Calibration tab
5) Select Calibration Point Air
6) Click Start to start the calibration wizard
7) Follow the instructions on the screen

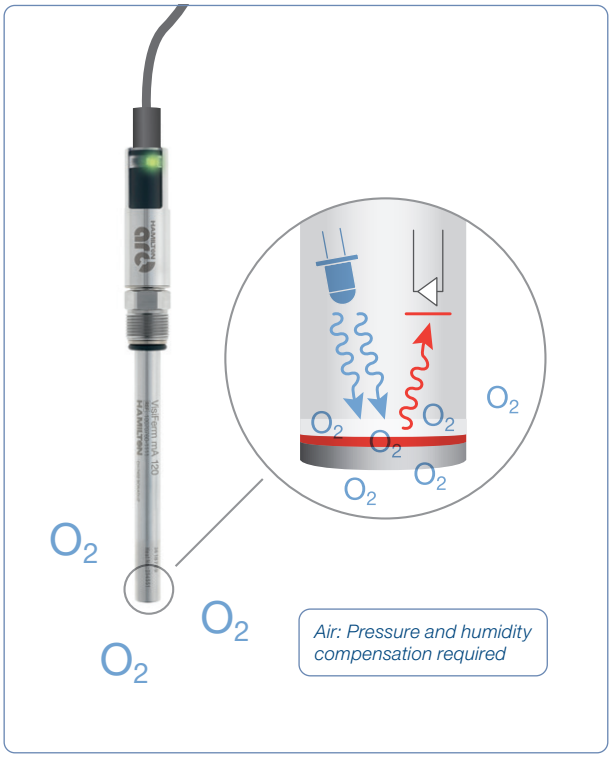

Figure 13: Calibration setup in air

NOTE: The value of the saturated oxygen concentration at different temperatures, different pressures and air humidity play an important role for the calibration of dissolved oxygen. For an accurate calibration Hamilton strongly recommend to to enter the atmospheric pressure and humidity values in the ArcAir calibration, product calibration and verification wizards.

7.3.3 Zero Point Calibration (Point Zero Oxygen)

1) Install the sensor into the calibration station and connected the Nitrogen calibration gas (Figure 14)
2) Power the VisiFerm mA and connect to ArcAir via the Arc Wireless Converter BT
3) Select the sensor in the sensor list
4) Open the Calibration tab
5) Select Zero Point calibration
6) Immerse the sensor into an oxygen-free environment (Figure 13) for e.g. nitrogen. Verify that the flow rate does not exceed 0.5 L/min and avoid overpressure
7) Click Start to start the calibration wizard
8) Follow the instructions on the screen

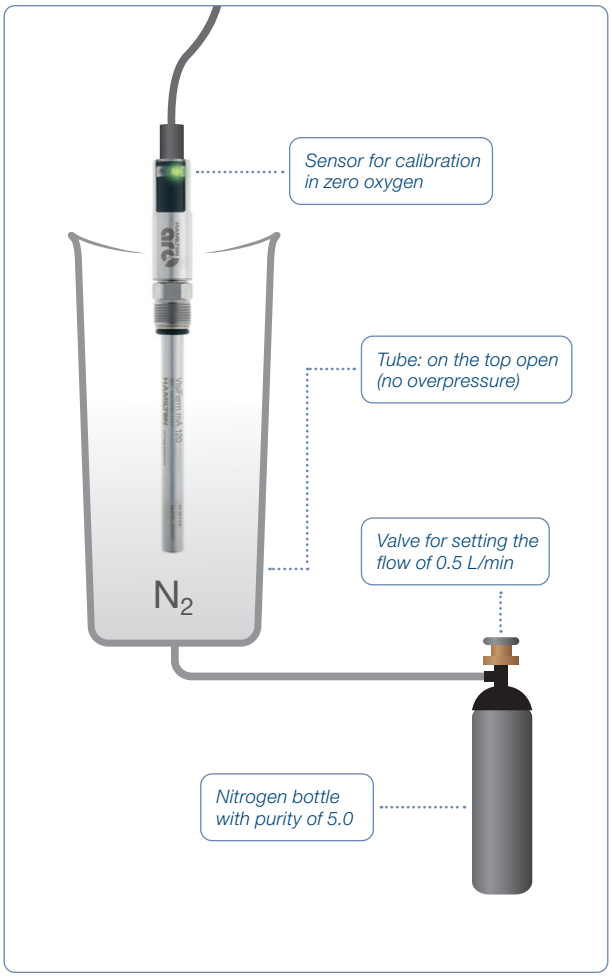

Figure 14: Zero point calibration setup

7.4 Product calibration

The product calibration is an in-process calibration procedure in order to adjust the measurement to specific process conditions. Product calibration is an additional calibration procedure to a standard calibration.

If product calibration is activated, the VisiFerm mA calibration curve is calculated from the data of last calibration at point 1 and from the data of the product calibration (Figure 15). In order to restore the original standard calibration curve, the product calibration can be at any time by selecting on the Product calibration command «cancel». A new standard calibration cancels a product calibration as well.

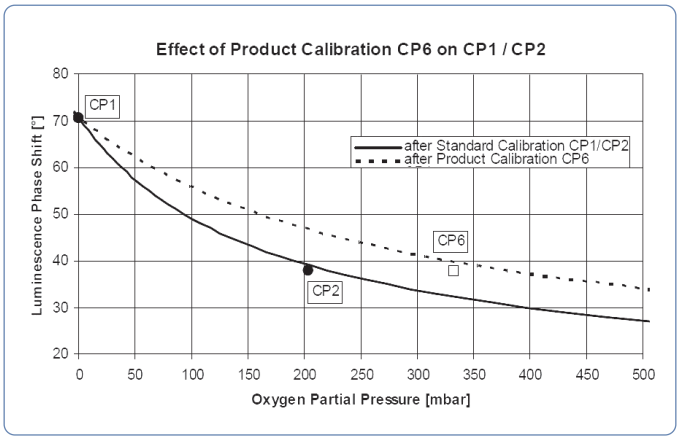

Figure 15: Effect of a product calibration (CP6) on an existing standard calibration function based on the Zero Point Calibration (CP 1) and the Air Calibration (CIP 2).

NOTE: The product calibration is possible for DO values in the range of 2 to 55 %-vol (20 – 550 mbar pO2).

A product calibration is performed as follows:

1) Connect one of the VisiFerm mA sensor with the power supply, e.g. Sensor Power Cable M12 Ref 355288 (see figure 6) and install a Wireless Converter BT Ref 242333
2) Select the desired sensor from the sensor list
3) Go to «Process Settings»
4) Click «Start» to start the product calibration wizard
5) Follow the instruction on the screen

NOTE: Alternatively, the product calibration may be performed with a field device on side the measuring point.

7.5 Cleaning

This chapter outlines a manual cleaning procedure for the care and maintenance of optical dissolved oxygen (ODO) sensors including a procedure for the cleaning the sensing membrane in particular.

Cleaning the Sensor

Carry out the cleaning procedure as follows:

1) Remove sensor from the measuring setup
2) Check if the ODO Cap is mounted firmly on the shaft
3) Soak a dust-free cloth or tissue paper with water and wipe the wetted parts with it. Thoroughly rinse the wetted parts and the sensing membrane with deionised water afterwards
4) Dry the wetted parts with a clean dust-free cloth or tissue and store the sensor in dry and dark conditions (ODO Caps are light-sensitive)
5) If the sensing-membrane on the front of the cap is contaminated with oil, grease or other organic matter, soak a clean dust-free cloth with isopropyl alcohol. Rinse residual isopropyl alcohol immediately from the membrane with deionised water and gently wipe over the membrane
6) After cleaning always perform a new calibration before carrying out measurements. (See chapter 7.3 in the corresponding Operating Instruction Manual)

⚠ ATTENTION: Cleaning, assembly and maintenance should be performed by personnel trained in such work. Do not use any abrasive tissues or cleaning materials and do not use any cleaning chemicals other than described above. Before removing the sensor from the measuring setup, always make sure that the setup is pressure-less, cold and that no process medium can be accidentally spilled. When removing and cleaning the sensor, it is recommended to wear safety glasses and protective gloves.

8 Troubleshooting

8.1 Sensor Self-Diagnostic

VisiFerm mA sensors provide a self-diagnostic functionality to detect and identify the most common sensor malfunctions. Both interfaces, analog 4-20 mA or digital HART, may provide warning and error messages. The analog 4–20 mA interface can be configured according to the NAMUR recommendations to indicate an abnormal event (See chapter 5.2.3). Use ArcAir for monitoring the sensor status and for troubleshooting. The following types of messages are provided by the self-diagnosis function.

8.1.1 Warnings

Warning	Cause / Solution
DO reading below lower limit	The oxygen reading is too low (DO < 0%-sat). Make a new zero-point calibration (Chapter 7.3.3)
DO reading above upper limit	The oxygen reading is too high (DO > 300 %-sat). Make a new calibration in oxygen saturated medium. (See chapter 7.3.2). If not successful, replace the sensor cap
DO reading unstable	If continuously happening, use a new cap or check the process regulation. If the problem still appears, call our Technical Support
T reading below lower limit	The temperature is below the user defined measurement temperature range. If the process temperature is outside this range, the sensor will not perform DO readings
T reading above upper limit	The temperature is above the user defined measurement temperature range. If the process temperature is outside this range, the sensor will not perform DO readings

Warning	Cause / Solution
Measurement not running	The measurement interval is set to 0 or the measurement temperature is out of the range
DO calibration recommended	Perform a calibration in order to ensure reliable measurement (Chapter 7.3.1)
DO last calibration not successful	The last calibration failed. The sensor is using the old successful calibration values. In order to ensure reliable measurement perform a new calibration (Chapter 7.3.1)
Maintenance required	Replace sensor or cap and recalibrate. This warning remains active as long as the sensor or cap quality is below 40%
4-20 mA value below 4 mA	The measurement value is below the lower limit of the 4–20 mA interface output. Reconfigure the 4-20mA interface (Chapter 5.2.7)
4-20 mA value above 20 mA	The measurement value is above the upper limit of the 4–20 mA interface output. Reconfigure the 4-20mA interface (Chapter 5.2.7)
4-20 mA current set-point not met	The 4–20 mA interface is not able to regulate the current requested for the current measurement value according to your 4–20 mA interface configuration. Check the 4–20 mA wiring and supply voltage (Chapter 5.3.2)
Sensor supply voltage too low	The sensor supply voltage is too low for the sensor to operate correctly. Ensure stable supply voltage within the sensors specifications (Chapter 5.3.3)
Sensor supply voltage too high	The sensor supply voltage is too high for sensor to operate correctly. Ensure stable supply voltage within the sensors specifications (Chapter 5.3.3)

8.1.2 Errors

Errors (failures)	Cause / Solution
DO reading failure	Sensor or cap quality is below 10%
DO p(O2) exceeds air pressure	Measured partial pressure of oxygen is higher than the air pressure set by the operator. Reconfigure the air pressure parameter (Chapter 5.2.3)
T sensor defective	The internal temperature sensor is defect, please call our Technical Support
DO sensor cap missing	The DO sensor cap has been removed. Do not immerse the sensor in a measurement solution. Mount an ODO Cap and calibrate the sensor prior measurement (Chapter 7)
Red channel failure	Measurement channel failure. Please call our Technical Support
Temperature reading far below min	The measured temperature is below the operation temperature
Temperature reading far above max	The measured temperature is above the operation temperature

8.2 Getting Technical Support

If a problem persists even after you have attempted to correct it, contact Hamilton`s Customer Support: Please refer to the contact information at the back of this Manual.

8.3 Returning VisiFerm mA for Repair

Before returning a VisiFerm mA sensor to Hamilton for repair, contact our Customer Service (see Chapter 14.2) and request: a Returned Goods Authorization (RGA) number.

Do not return a VisiFerm mA sensor to Hamilton without an RGA number. This number assures proper tracking of your sensor. VisiFerm mA sensors that are returned without an RGA number will be sent back to the customer without being repaired.

Decontaminate the VisiFerm mA sensor and remove health hazards, such as radiation, hazardous chemicals, infectious agents etc. Provide complete description of any hazardous materials that have been in contact with the sensor.

9 Disposal

The design of Hamilton sensors optimally considers environmental compatibility. In accordance with the EC guideline 2012/19/EU Hamilton sensors that are worn out or no longer required must be sent to a dedicated collection point for electrical and electronic devices, alternatively, must be sent to Hamilton for disposal. Sensors must not be sent to an unsorted waste disposal point.

有害物質表，請參閱www.hamiltoncompany.com, 章節過程分析，符合性聲明

10 Bluetooth Certification

Hamilton
HVIN: 10070760

FCC ID: 2AQYJVISIMA
IC ID: 24225-VISIMA

This device complies with Part 15 of the FCC Rules and with Industry Canada licence-exempt RSS standard(s). Operation is subject to the following two conditions: (1) this device may not cause harmful interference, and (2) this device must accept any interference received, including interference that may cause undesired operation.

Le présent appareil est conforme aux CNR d'Industrie Canada applicables aux appareils radio exempts de licence. L'exploitation est autorisée aux deux conditions suivantes: (1) l'appareil ne doit pas produire de brouillage, et (2) l'utilisateur de l'appareil doit accepter tout brouillage radioélectrique subi, même si le brouillage est susceptible d'en compromettre le fonctionnement.

ORDERING INFORMATION

NOTE: This equipment has been tested and found to comply with the limits for a Class A digital device, pursuant to Part 15 of the FCC Rules. These limits are designed to provide reasonable protection against harmful interference when the equipment is operated in a commercial environment. This equipment generates, uses, and can radiate radio frequency energy and, if not installed and used in accordance with the instruction manual, may cause harmful interference to radio communications. Operation of this equipment in a residential area is likely to cause harmful interference in which case the user will be required to correct the interference at his own expense.

NOTE: Changes or modifications made to this equipment not expressly approved by Hamilton may void the FCC authorization to operate this equipment.

11 Ordering Information

Parts below may only be replaced by original spare parts.

11.1 VisiFerm mA

10070760 VisiFerm mA

Code	Interface
1	mA/HART

Code	Sensor Length in mm
1	120
2	160
3	225*
4	325
5	425

Code	ODO Cap
1	ODO Cap H3
2	ODO Cap H4

Code	Wetted Parts
1	EPDM

10070760 –					Orderingcode

**The VisiFerm mA sensor family 225 have, in reality, a shaft length of 215 mm. This ensures optimal rinsing in retractable armatures, such as Retractex.*

ORDERING INFORMATION

11.2 Parts and Accessories

Ref	Description	Wetted Materials
10068400	ODO Cap H3	Stainless steel 1.4435 Silicone (FDA and USP Class VI)

Application: For general application in biotechnology, water treatment and monitoring as well as in breweries and wineries.

Ref	Description	Wetted Materials
10078261	ODO Cap H4	Stainless steel 1.4435 PTFE (USP Class VI)

Application: For fermentation processes where sterilization in place (SIP) is performed in media containing higher amounts of lipophilic compounds. It comes with hygienic design.

Ref	Product Name	Length
355283	Sensor Cable M12	3m
355284	Sensor Cable M12	5m
355285	Sensor Cable M12	10m

Description: The Sensor Cable M12 – open end is designed for connection to a data recorder, indicator, control unit or PCS (Process Control System) with analog I/O.

Ref	Product Name
355288	Sensor Power Cable M12

Description: This cable includes a power adapter to supply the sensor with operation power.

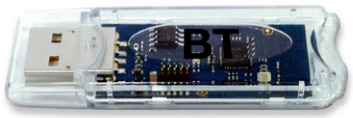

Ref	Product Name
242333	Wireless Converter BT

Description: Designed for wireless communication between ArcAir and VisiFerm mA sensor.

Ref	Product Name
10076282	Junction Box

Description: For connection between process and sensor open end cables. IP 68 specified.

ORDERING INFORMATION

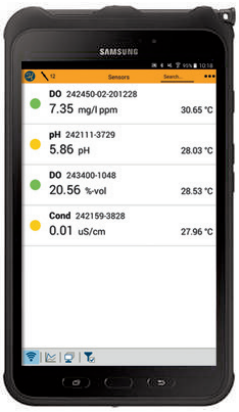

Ref	Product Name
10071111	Arc View Mobile Basic for none Ex environment

Description: The pre-configured Arc View Mobile, Hamilton`s mobile solution for monitoring measurement values, calibrating Arc sensors and configuring various parameters with the unified user interface for pH, DO, Conductivity and ORP. The Arc View Mobile is based on the Samsung Galaxy Tab Active tablet and comes pre-configured with the ArcAir basic, app blocker application, power supply cable, instruction manual and Hamilton quick guide.

Ref	Product Name
10071113	Arc View Mobile Advanced for none Ex environment

Description: The pre-configured Arc View Mobile, Hamilton`s mobile solution for monitoring measurement values, calibrating Arc sensors and configuring various parameters with the unified user interface for pH, DO, Conductivity and ORP. The Arc View Mobile is based on the Samsung Galaxy Tab Active tablet and comes pre-configured with the ArcAir advanced application, including features for CFR 21 Part 11 and Eudralex Volume 4 Annex 11 compliance, app blocker application, power supply cable, instruction manual and Hamilton quick guide.

Ref	Product Name
243688	View Ex Mobile

Description: View Ex Mobile is a monitoring, configuration and calibration device based on Android smartphone application technology. The View Ex Device can be used wirelessly for calibration, configuration and diagnostics in ex environment (Zone 1, 2, 21, 22) or in laboratory.

11.3 Arc Services

Hamilton service engineers are available in Europe and China in order to provide customers with on-site services. Hamilton offers a wide range of services from technical support to initial operation, qualification and maintenance of the sensors.

Various tailored services are offered especially for the BioPharma, ChemPharma and brewery industries. Experienced service engineers ensure an optimal and professional service.

In order to find your local service support please visit:
www.hamiltoncompany.com/process-analytics/support

Overview of service offers

- Online service
- Technical support
- Initial Operation/Calibration
- Qualification (IQ/OQ)
- Service packages
- Maintenance
- Training

© 2020 Hamilton Bonaduz AG. All rights reserved.

REF 10075121/01 — 03/2020

HAMILTON®

Web: www.hamiltoncompany.com
USA: 800-648-5950
Europe: +41-58-610-10-10

Hamilton Americas & Pacific Rim
4970 Energy Way
Reno, Nevada 89502 USA
Tel: +1-775-858-3000
Fax: +1-775-856-7259
sales@hamiltoncompany.com

Hamilton Europe, Asia & Africa
Via Crusch 8
CH-7402 Bonaduz, Switzerland
Tel: +41-58-610-10-10
Fax: +41-58-610-00-10
contact.pa.ch@hamilton.ch

To find a representative in your area, please visit www.hamiltoncompany.com.

This guide may be available in other languages.
Visit www.hamiltoncompany.com for more information.