Shadow Creator

Mixed Reality HDM

USER GUIDE

Action One A01

Manufacture:Shadow Creator Information Technology Co., Ltd.

Action One A1 Starts Smart Life

Action One A1 will change the way you communicate, create, collaborate, and explore. Open it and enjoy your smart life.Before that, please read the instructions carefully and set up your device.

Here's a rundown of Action One's Accessories.

You can get more accessories at www.shadowcreator.com.

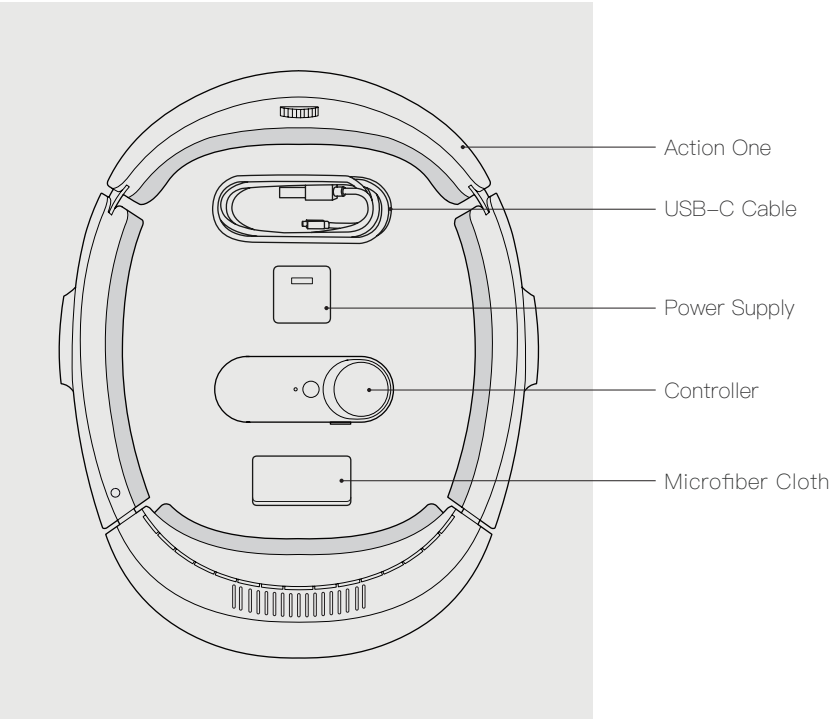
Action One
USB-C Cable
Power Supply
Controller
Microfiber Cloth

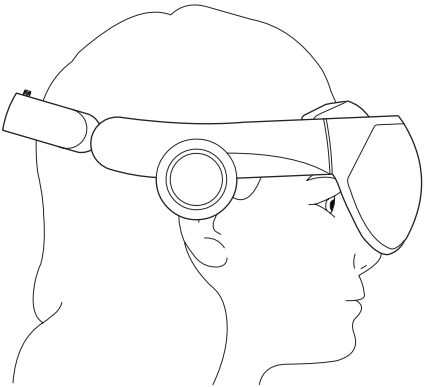

Safe and Comfort

Use it in a safe environment

Please use Action One in a safe space without barriers.

Please don't use Action One while driving or doing other unsafe things.

Staying comfortable

Please take a few more breaks during the first use of Action One.

If you feel uncomfortable, such as dizziness, motion sickness, nausea, confusion, headache, eyestrain, please stop using it immediately.

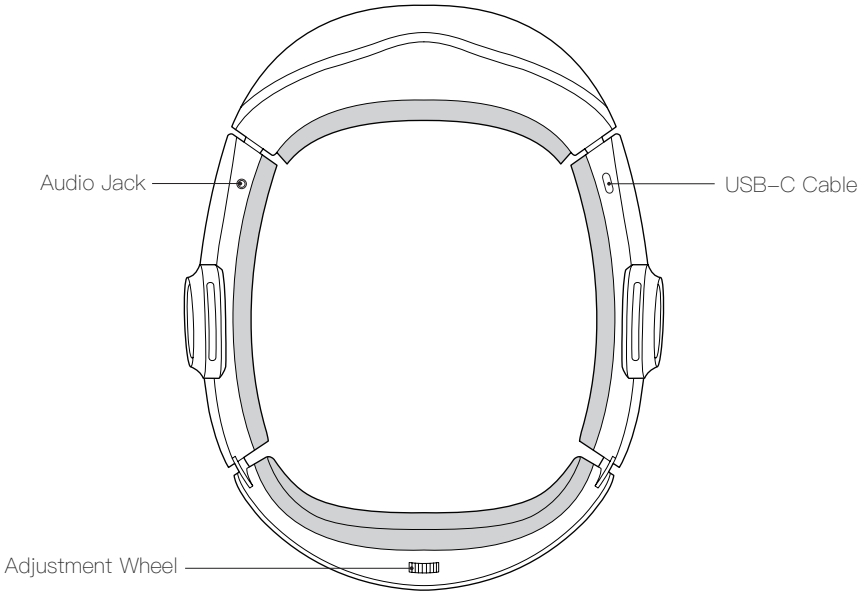
Audio Jack
USB-C Cable
Adjustment Wheel

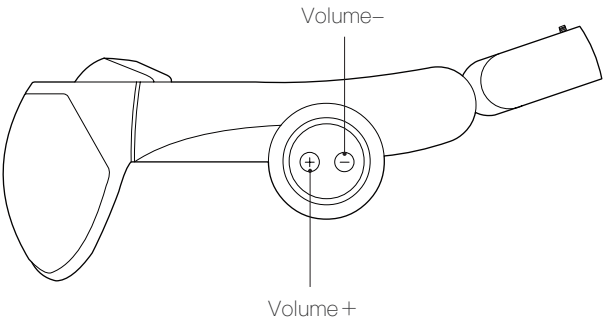
Volume–
Volume +

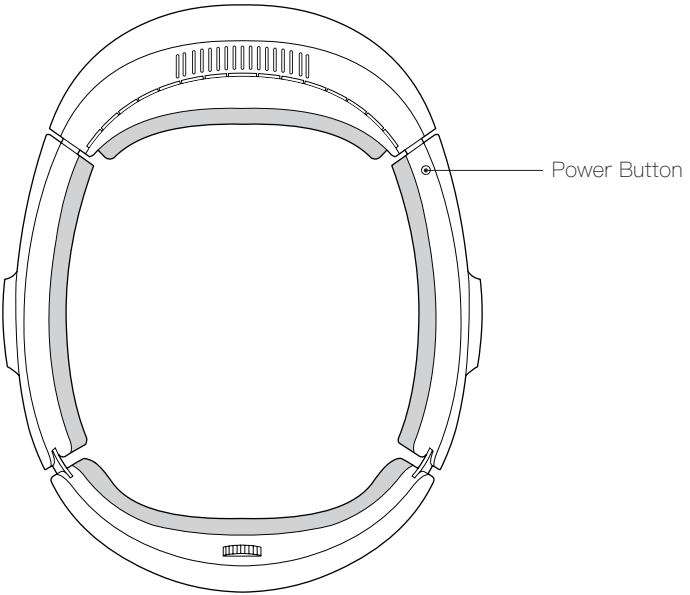
Power Button

Turn Action One On or Off

Press the power button and hold for 5 seconds to turn on your Action One when it's off.

To turn off Action One , long press the power button for 2–4 seconds.

WEARING

Please wear the headset following the instructions below. Don’t take off your glasses because Action One doesn’t support focus adjustment.

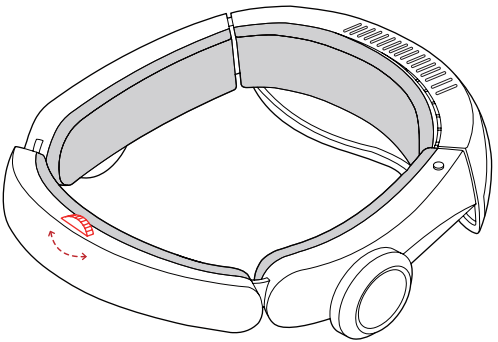

1

Rotate the headband up.

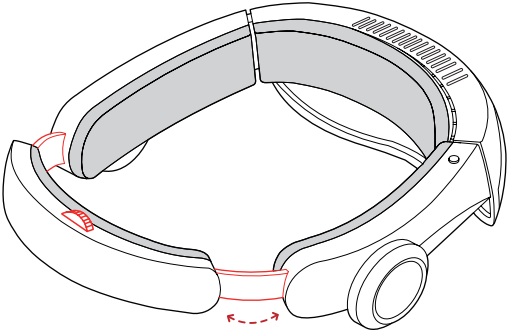

2

Turn the adjustment wheel to extend the headband.

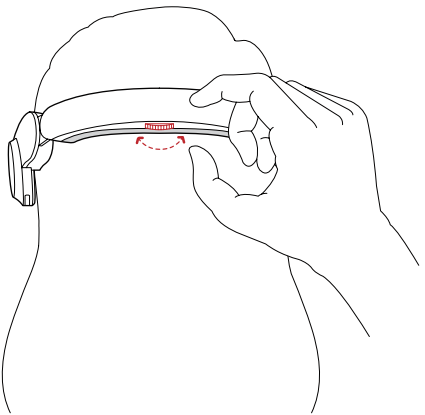

3

Turn the adjustment wheel to tighten the headband until it fits snugly.

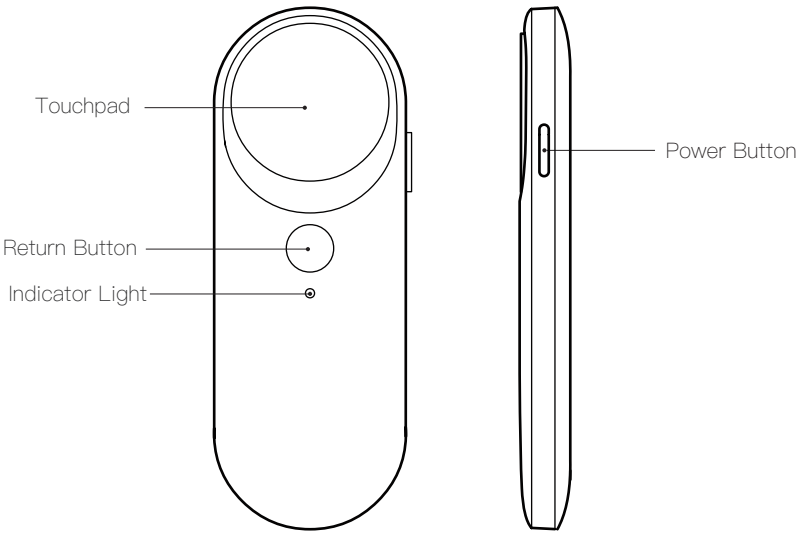
Touchpad
Return Button
Indicator Light
Power Button

Controller

The controller gives you another way to interact with holograms.
In 3D mode, the controller will be used as air mouse.

Select and Confirm

To select a hologram, button or other elements,
please aim the pointer at it and press the touchpad.

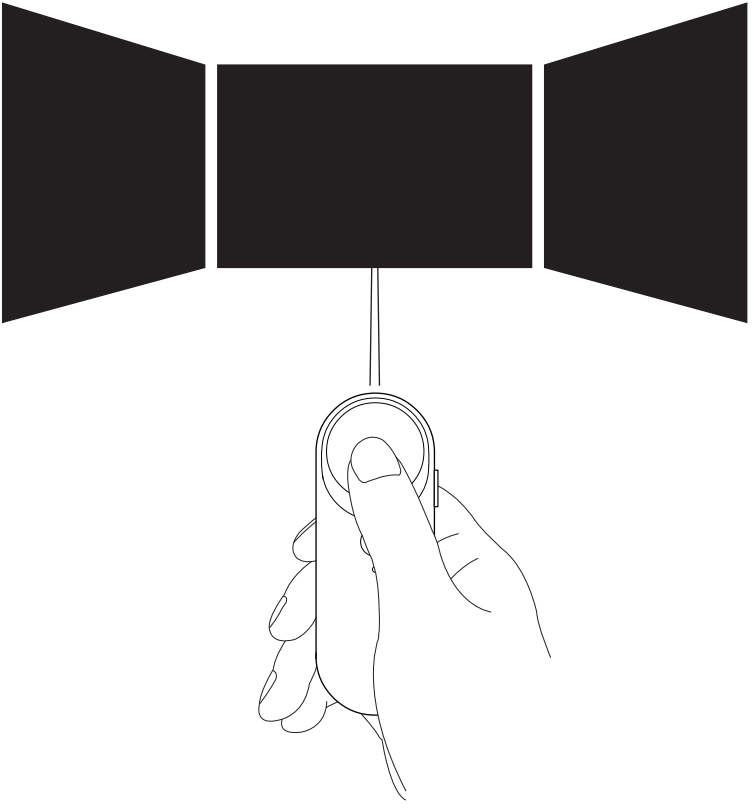

How to edit windows?

Align the status bar above the window and long press VOL+ or touchpad to drag it to any position.

Through the small icons in the status bar, the window can be zoomed in or out, fixed in full-screen mode, closed and so on.

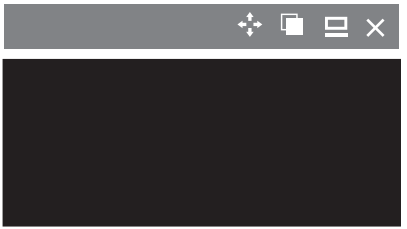

Operation is subject to the following two conditions:

(1) This device may not cause harmful interference,and (2) this device must accept any interference received,including interference that may cause undesired operation.

CAUTION

Any changes or modifications not expressly approved by the grantee of this device could void the user's authority to operate the equipment.

RF exposure warning:

1 The equipment complies with RF exposure limits set forthset forth for an uncontrolled environment.
2 The equipment must not be co-located or operating in conjunction with any oyher antenna or transmitter.

This product is designed for the best performance when used with the original factory accessories.The company is not responsible for any damage and/or any accidents caused by the failure of the attachment of the non-shadow creator original plant.

Please note that due to the use of shadow creator original plant accessories, any fault of this product is not covered by this product warranty, but the user can pay for maintenance.

FCC Warning

This device complies with part 15 of the FCC Rules. Operation is subject to the following two conditions: (1) This device may not cause harmful interference, and (2) this device must accept any interference received, including interference that may cause undesired operation.

Any Changes or modifications not expressly approved by the party responsible for compliance could void the user's authority to operate the equipment.

Note: This equipment has been tested and found to comply with the limits for a Class B digital device, pursuant to part 15 of the FCC Rules. These limits are designed to provide reasonable protection against harmful interference in a residential installation. This equipment generates uses and can radiate radio frequency energy and, if not installed and used in accordance with the instructions, may cause harmful interference to radio communications. However, there is no guarantee that interference will not occur in a particular installation. If this equipment does cause harmful interference to radio or television reception, which can be determined by turning the equipment off and on, the user is encouraged to try to correct the interference by one or more of the following measures:

-Reorient or relocate the receiving antenna.
-Increase the separation between the equipment and receiver.
-Connect the equipment into an outlet on a circuit different from that to which the receiver is connected.
-Consult the dealer or an experienced radio/TV technician for help.

Specific Absorption Rate (SAR) information:

This Mixed Reality HDM meets the government's requirements for exposure to radio waves. The guidelines are based on standards that were developed by independent scientific organizations through periodic and thorough evaluation of scientific studies. The standards include a substantial safety margin designed to assure the safety of all persons regardless of age or health.

FCC RF Exposure Information and Statement

The SAR limit of USA (FCC) is 1.6 W/kg averaged over one gram of tissue. Device types: Mixed Reality HDM (FCC ID:2AQYUACTIONONE-A1) has also been tested against this SAR limit. The highest SAR value reported under this standard during product certification for use at the head is 0.306W/kg, This device was tested for head operations with the edge of the helmet kept 0mm from the head. To maintain compliance with FCC RF exposure requirements, use accessories that maintain a 0mm separation distance between the head and the edge of the helmet.