Virtual Reality HDM

USER GUIDE

Shadow V01

Manufacture:Shadow Creator Information Technology Co., Ltd.

Shadow VR All Powerful

Shadow VR is about to bring you the ultimate experience of immersion and interactivity.Please read the instructions carefully and set up your device.

Here's a rundown of Shadow VR's Accessories.

You can get more accessories at www.shadowcreator.com.

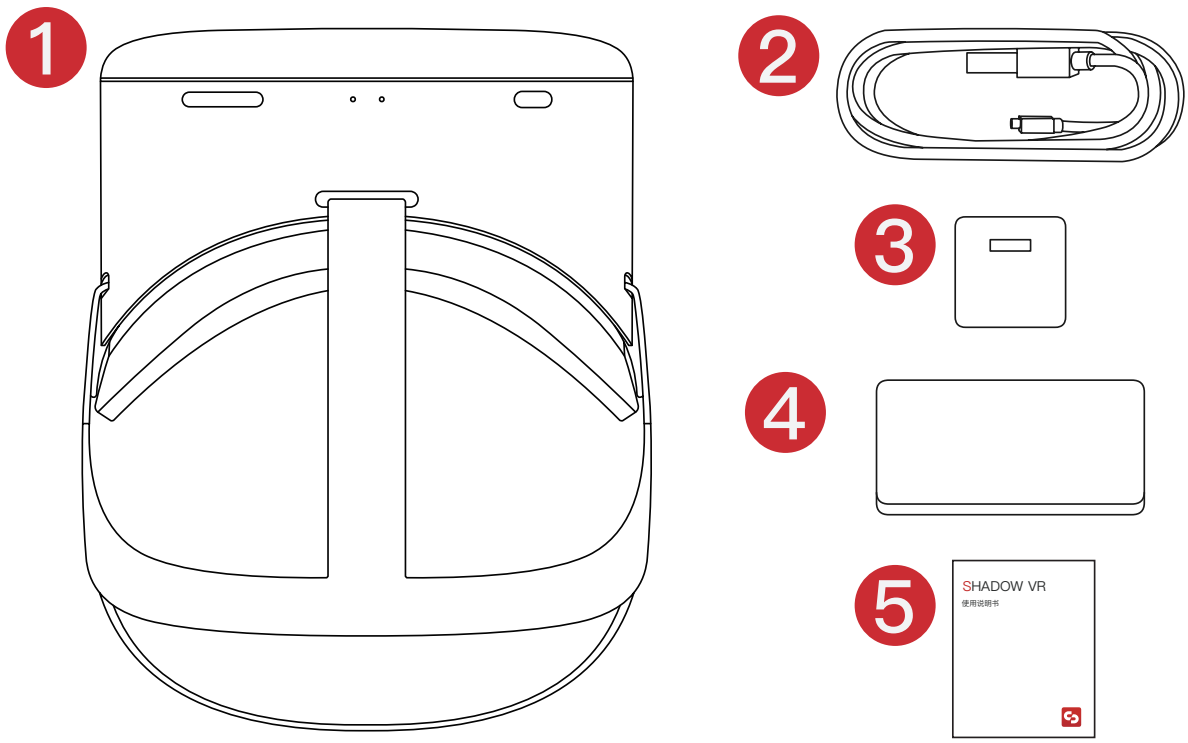

1. SHADOW VR

2. TYPE–C CABLE

3. POWER SUPPLY

4. MICROFIBER CLOTH

5. USER GUIDE

Basic Instructions

Function Keys

Power On、Wearing、Connect with Controller

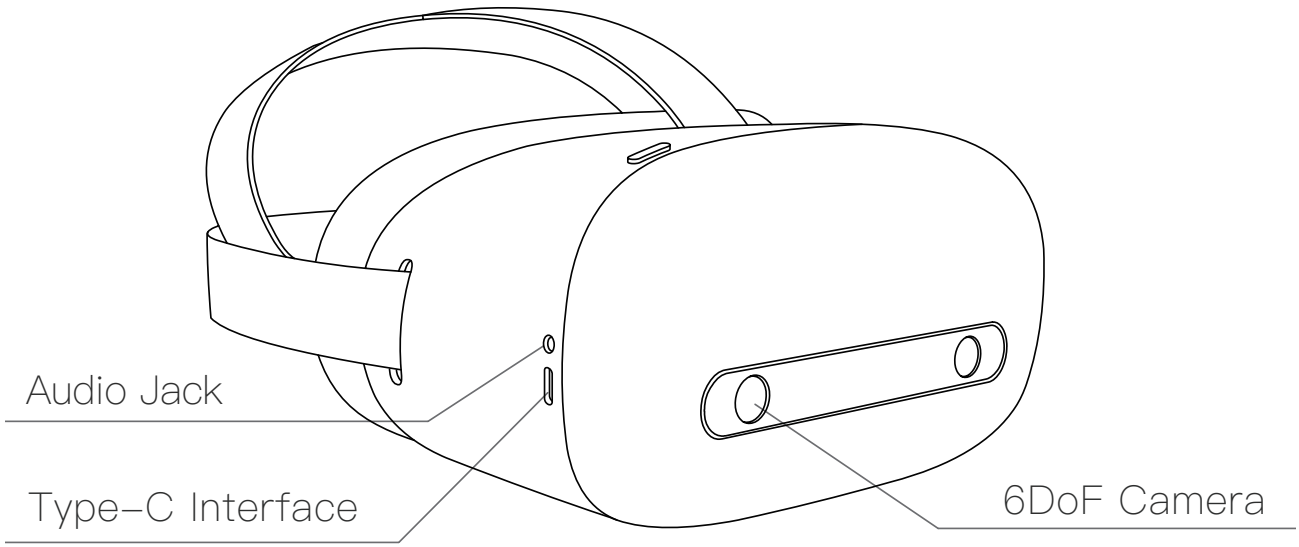
Audio Jack
Type-C Interface
6DoF Camera

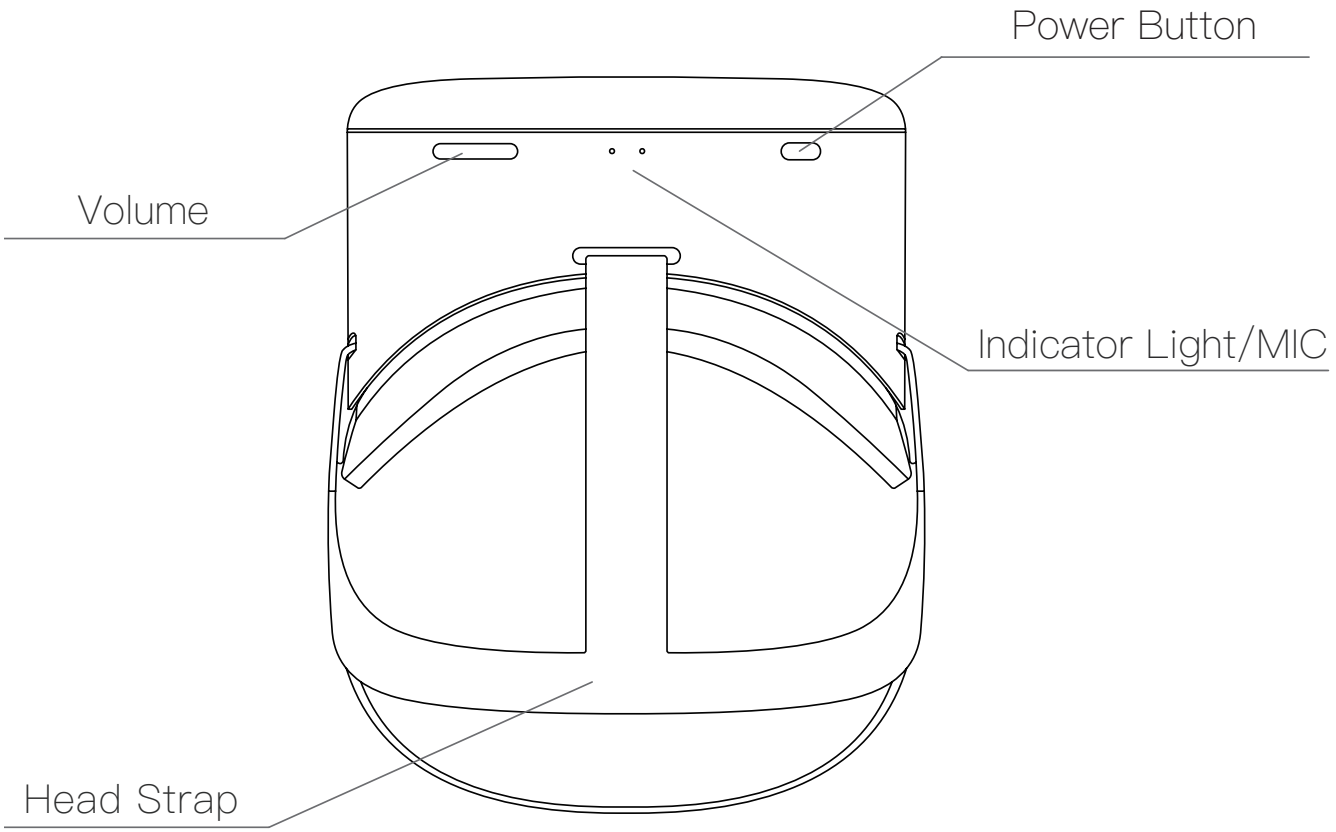
Power Button
Volume
Indicator Light/MIC
Head Strap

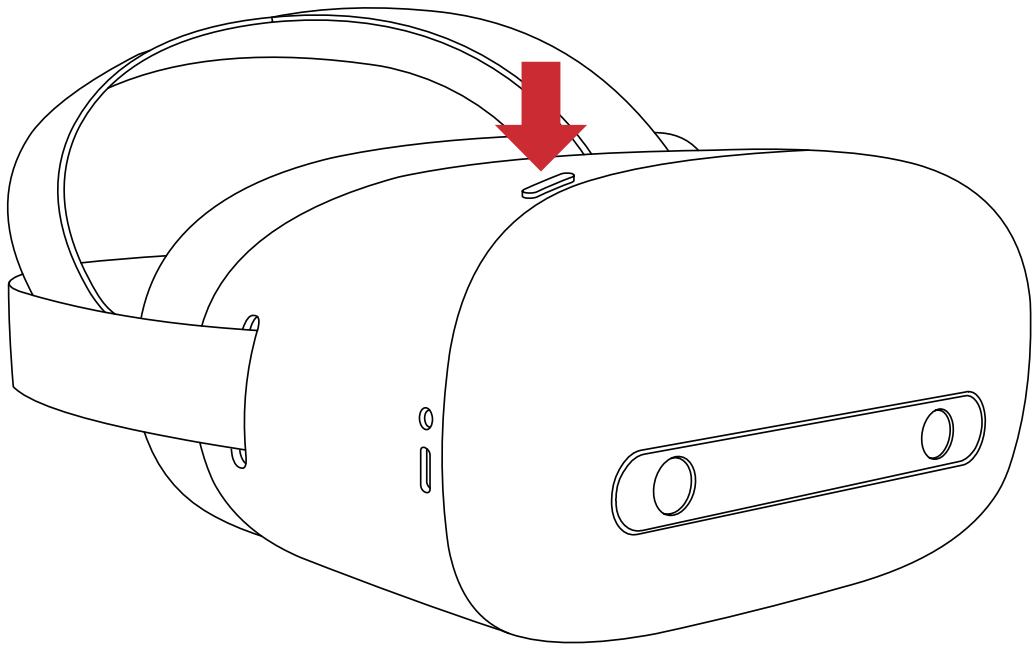

1.Turn Action One on

Press the power button and hold for 5 seconds to turn on your Shadow VR when it's off.

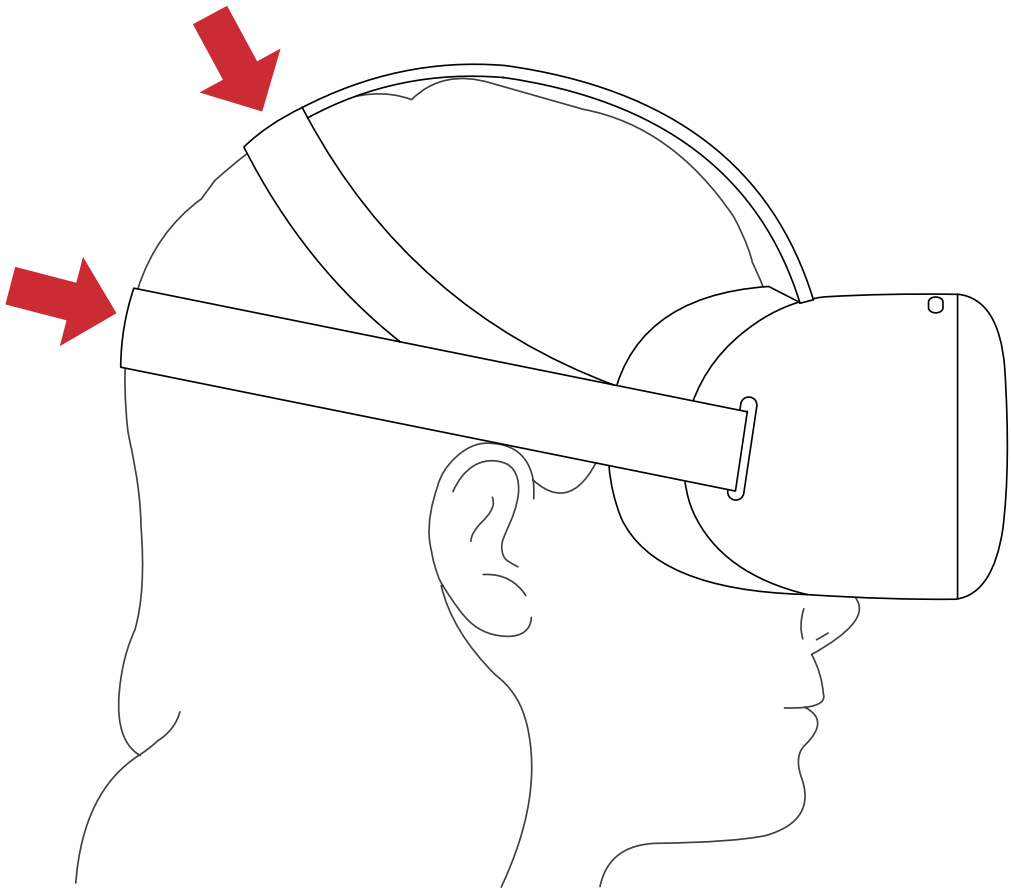

2.Wearing

Please wear the headset following the instruction above.

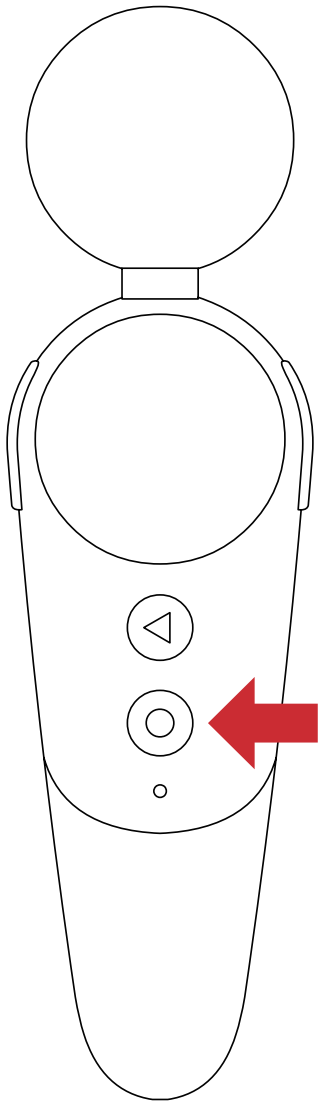

3.Connect with Controller

Press Power Button. The status indicator of controller will be flashing (blue) if it is ready to be connected with the headset.
(Bluetooth controllers are required to buy separately.)

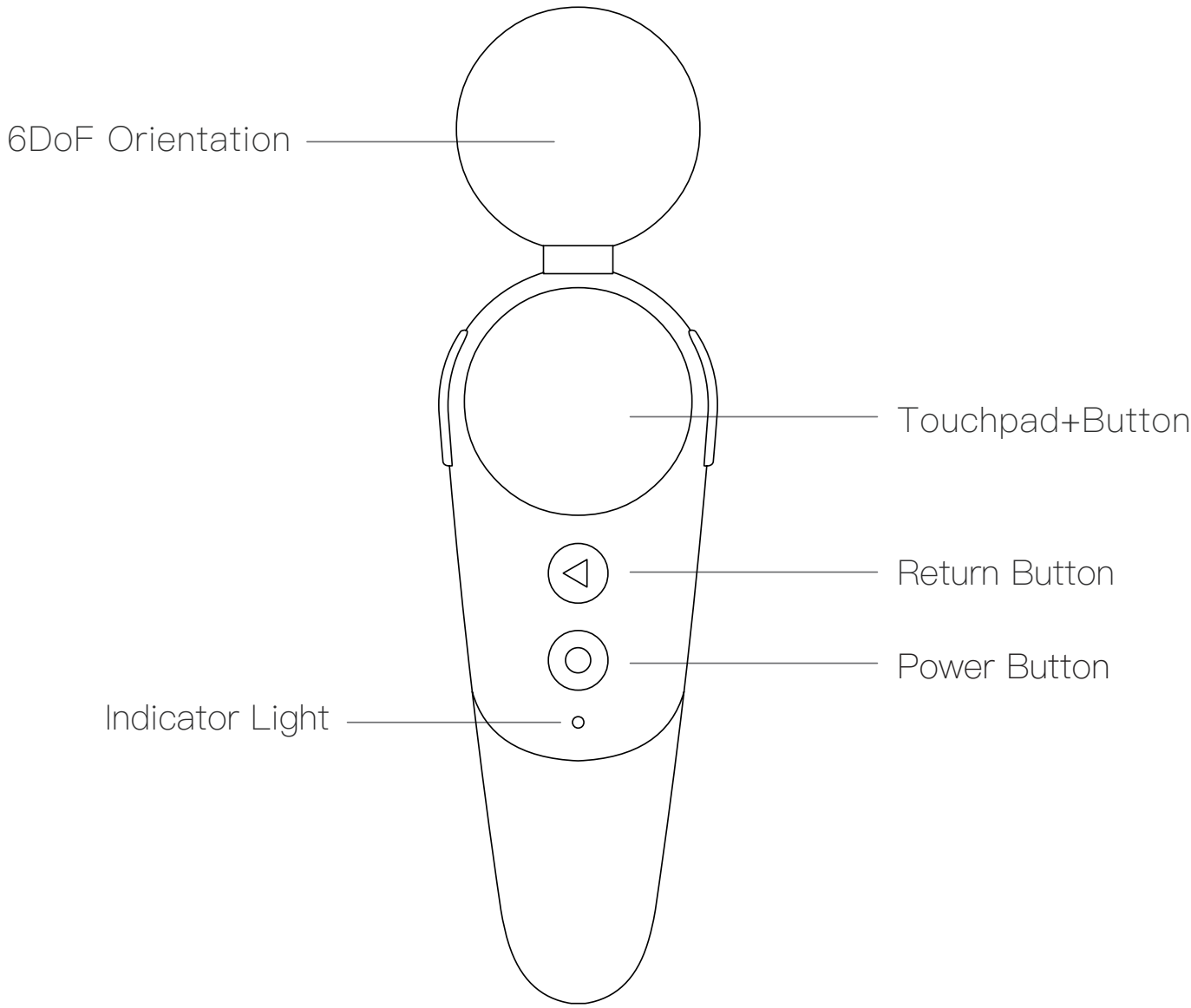
6DoF Orientation
Touchpad+Button
Return Button
Power Button
Indicator Light

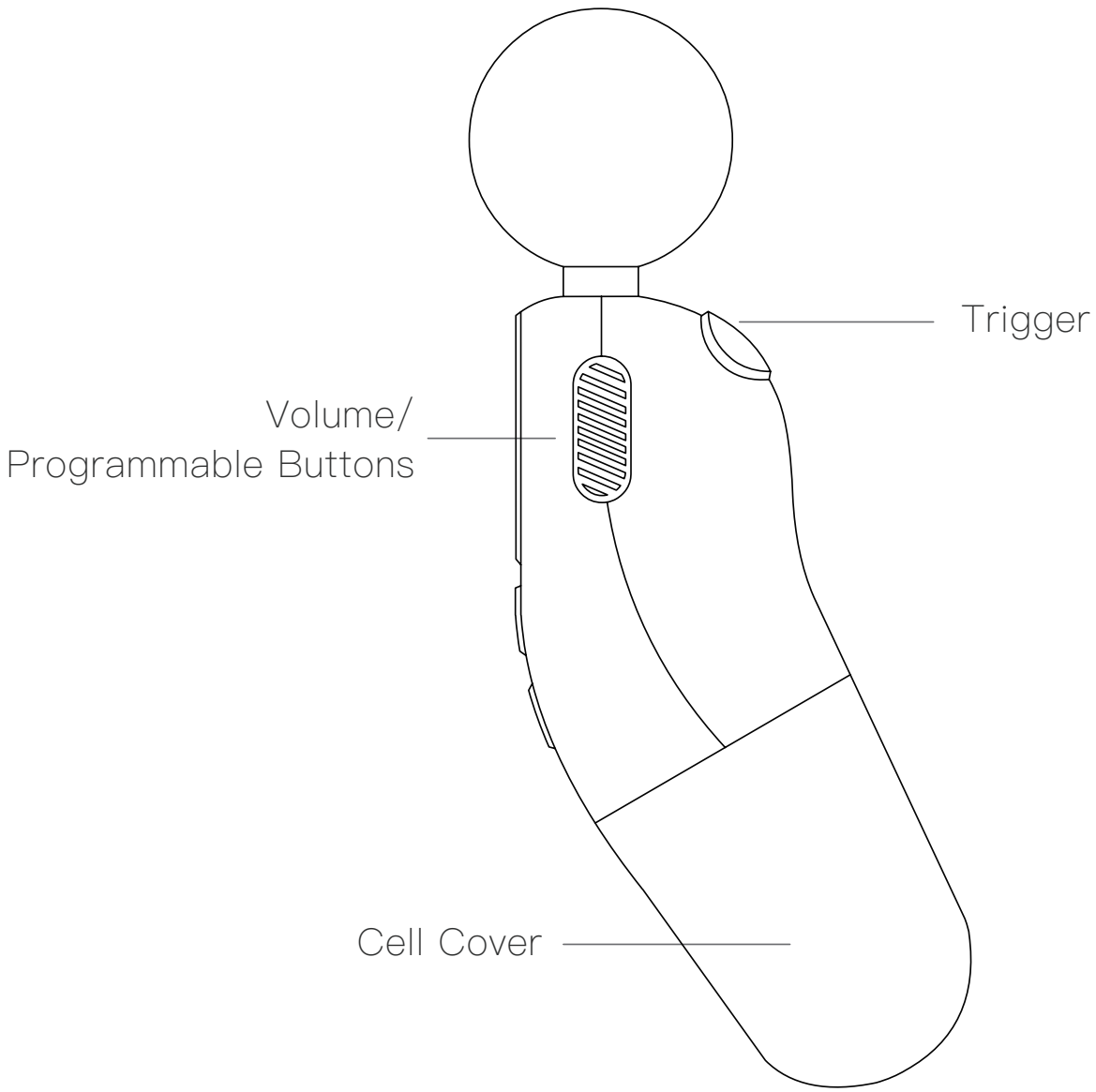
Trigger
Volume/
Programmable Buttons
Cell Cover

Controller

Bluetooth controllers are required to buy separately.

For a better experience, please buy two controllers.

Please visit **www.shadowcreator.com** for more information.

Hardware Revision:	V01-MB-V1.0
Software Revision:	SW_V01_YC_A_V1.7.1_180813
Frequency Band(s):	Bluetooth 5.0+EDR: Frequency Bands:2402-2480 MHz Bluetooth 5.0 LE: Frequency Bands:2402-2480 MHz 2.4GWIFI 802.11b/g/n(20MHz): 2412~2472MHz 5GWIFI 802.11a/n/ac (20MHz): 5745~5825MHz 802.11n /ac(40MHz):5755~5795MHz 802.11ac (80MHz):5775MHz
Transmit Power Range(s):	Bluetooth 5.0+EDR: Max power:3.06dBm Bluetooth 5.0 LE: Max power:-2.96dBm 2.4GWIFI Max power:15.62dBm 5GWIFI Max power:11.38dBm
Modulation Type(s):	Bluetooth 5.0+EDR: Modulation Mode: GFSK, π /4-DQPSK,8DPSK Bluetooth 5.0 LE: Modulation Mode: GFSK 2.4GWIFI Modulation Mode: 802.11b(DSSS):CCK,DQPSK,DBPSK 802.11g(OFDM):BPSK,QPSK,16-QAM,64-QAM 802.11n(OFDM):BPSK,QPSK,16-QAM,64-QAM 5GWIFI OFDM/DBPSK/DQPSK
Channel Spacing(s):	BT 5.0+EDR Channel Spacing: 1MHz BT 5.0 Channel Spacing: 2MHz 2.4G WIFI Channel Spacing: 5MHz 5.8G WIFI Channel Spacing: 802.11a/n/ac(20):20MHz, 802.11n/ac(40):40MHz, 802.11ac(80):80MHz
Antenna type(s) and Gain(s):	BT5.0+EDR: PIFA antenna, Antenna gain:-2.84dBi BT5.0: PIFA antenna, Antenna gain:-2.84dBi 2.4G WIFI: PIFA Antenna, Antenna Gain: ANT A:-2.84 dBiANT B:-2.84 dBii 5.8G WIFI: PIFA Antenna, Antenna Gain: ANT A:-2.84 dBiANT B:-2.84 dBii

FCC Warning

This device complies with part 15 of the FCC Rules. Operation is subject to the condition that this device does not cause harmful interference..

Any Changes or modifications not expressly approved by the party responsible for compliance could void the user's authority to operate the equipment.

Note: This equipment has been tested and found to comply with the limits for a Class B digital device, pursuant to part 15 of the FCC Rules. These limits are designed to provide reasonable protection against harmful interference in a residential installation. This equipment generates uses and can radiate radio frequency energy and, if not installed and used in accordance with the instructions, may cause harmful interference to radio communications. However, there is no guarantee that interference will not occur in a particular installation. If this equipment does cause harmful interference to radio or television reception, which can be determined by turning the equipment off and on, the user is encouraged to try to correct the interference by one or more of the following measures:

-Reorient or relocate the receiving antenna.

-Increase the separation between the equipment and receiver.

-Connect the equipment into an outlet on a circuit different from that to which the receiver is connected.

-Consult the dealer or an experienced radio/TV technician for help.

Specific Absorption Rate (SAR) information:
This Virtual Reality HDM meets the government's requirements for exposure to radio waves. The guidelines are based on standards that were developed by independent scientific organizations through periodic and thorough evaluation of scientific studies. The standards include a substantial safety margin designed to assure the safety of all persons regardless of age or health.

FCC RF Exposure Information and Statement

The SAR limit of USA (FCC) is 1.6 W/kg (head) averaged over one gram of tissue and 4.0 W/kg (Extremity) averaged over ten gram of tissue.. Device types:Virtual Reality HDM (FCC ID:2AQYUSHADOWV01) has also been tested against this SAR limit. The highest SAR value reported under this standard during product certification for use at the head is 0.396W/kg and at the Extremity is 0.132W/kg,This device was tested for head operations with the edge of the helmet kept 0mm from the head and extremity. To maintain compliance with FCC RF exposure requirements, use accessories thatmaintain a 0mm separation distance between the head and the edge of the helmet.

CE Maintenance

1. Use careful with the earphone maybe excessive sound pressure from earphones and headphones can cause hearing loss.

2.Risk of explosion if battery is replaced by an incorrect type. Dispose of used batteries according to the instructions.

3.The product shall only be connected to a USB interface of version USB2.0.

4.Adapter shall be installed near the equipment and shall be easily accessible.

5.EUT Operating temperature range: -10° C to 40° C .

6.Adapter :

The plug considered as disconnect device of adapter

Input: AC 100-240V, 50/ 60Hz, 450mA

Output: 5.2V 2A

7.The device complies with RF specifications when the device used at 0 mm from your body.

8.To prevent possible hearing damage. Do not listen at high volume levels for long periods.

Declaration of Conformity

Shadow Creator Information Technology Co., Ltd. hereby declares that this Virtual Reality HDM is in compliance with the essential requirements and other relevant provisions of Directive 2014/53/EU.In accordance with Article 10(2) and Article 10(10),This product is allowed to be used in all EU member states.

CE