TEST REPORT

Report No.:SHATBL2510006W01

Applicant	:	Satellite Electronic(Zhong Shan)Ltd.
Product Name	:	CEILING FAN REMOTE CONTROL
Brand Name	:	N/A
Model Name	:	TRA221H1M
Series Model	:	N/A
FCC ID	:	2AQZU-18074
Test Standard	:	47 CFR Part 15 Subpart C, Section 15.231
Date of Sample Arrival	:	Oct.09, 2025
Date of Test	:	Oct.09, 2025~Oct.22, 2025
Issue Date	:	Oct.23, 2025

Report Prepared by : Emily

(Emily)

Report Approved by : Guozheng Li

(Guozheng Li)

Authorized Signatory : Terry Yang

(Terry Yang)

"Shanghai ATBL Technology Co., Ltd." hereby certifies that according to actual testing conditions. The test results or observations are provided in accordance with measured value, without taking risks caused by uncertainty into account. Without explicit stipulation in special agreements, standards or regulations, ATBL shall not assume any responsibility. The test results or observations are applicable only to tested sample. Client shall be responsible for representativeness of the sample and authenticity of the material. This report will be void without authorized signature or special seal for testing report. Do not copied without authorization.

Table of Contents

REVISION HISTORY **3**

SUMMARY OF TEST RESULT **4**

1. GENERAL DESCRIPTION **5**

1.1. APPLICANT 5

1.2. MANUFACTURER 5

1.3. FACTORY 5

1.4. GENERAL INFORMATION OF EUT 6

1.5. ENVIRONMENTAL CONDITIONS 6

1.6. DESCRIPTION OF THE TEST MODES 7

1.7. BLOCK DIAGRAM SHOWING THE CONFIGURATION OF SYSTEM TESTED 7

1.8. TEST SOFTWARE AND POWER LEVEL 7

1.9. DESCRIPTION OF SUPPORT UNITS 7

1.10. LABORATORY INFORMATION 8

1.11. MEASUREMENT UNCERTAINTY 8

1.12. EQUIPMENT LIST 9

2. TEST RESULT **11**

2.1. CONDUCTED EMISSION MEASUREMENT 11

2.2. RADIATED EMISSION MEASUREMENT 13

2.3. BANDWIDTH TEST 22

2.4. DUTY CYCLE 24

2.5. AUTOMATICALLY DEACTIVATE 26

2.6. ANTENNA REQUIREMENT 27

3. TEST SETUP PHOTOGRAPHS **27**

4. EXTERNAL AND INTERNAL PHOTOS OF THE EUT **27**

Revision History

Rev.	Issue Date	Report No.	Effect Page	Contents
00	Oct.23, 2025	SHATBL2510006W01	ALL	Initial Release

Summary of Test Result

Standard Section	Test Item	Result	Remark
15.207	Conducted Emission	N/A	--
15.209/ 15.231.(b)	Radiated Spurious Emission	PASS	--
15.231.(b)	Field Strength of Fundamental Emissions	PASS	--
15.231(a)(1)	Transmission requirement	PASS	--
15.231(C)	20dB&99% Bandwidth	PASS	--
15.203	Antenna Requirement	PASS	--
15.35	Duty Cycle	PASS	--

NOTE:

(1). 'N/A' denotes test is not applicable in this Test Report.

(2). All tests are according to ANSI C63.10-2020.

1. General Description

1.1. Applicant

Name : Satellite Electronic(Zhong Shan)Ltd.

Address : No.8, Chuang Ye Road, Torch Development Zone, Zhongshan, Guangdong, China

1.2. Manufacturer

Name : Satellite Electronic(Zhong Shan)Ltd.

Address : No.8, Chuang Ye Road, Torch Development Zone, Zhongshan, Guangdong, China

1.3. Factory

Name : CHUNGEAR INDUSTRIAL CO., LTD.

Address : No.12, Jingke 8th Rd., Nantun Dist., Taichung City 40852, Taiwan (R.O.C.)

1.4. General Information of EUT

Product Name	CEILING FAN REMOTE CONTROL
Trade Name	N/A
Model Name	TRA221H1M
Series Model	N/A
Model Difference	N/A
Frequency band	304.25MHz
Power supply	DC 3V From Battery
Modulation Type	ASK
Antenna type	PCB Antenna
Antenna gain	-6dBi
Hardware version number	250829
Software version number	TK52-01

Note:

For a more detailed features description, please refer to the manufacturer's specifications or the User Manual.

1.5. Environmental Conditions

Temperature	Normal Temperature:	25°C
Voltage	Normal Voltage:	DC 3V
Other	Relative Humidity:	54%
	Air Pressure:	100kPa

1.6. Description of the test modes

For Conducted test items and Radiated spurious emissions:

Each of these EUT operation mode(s) or test configuration mode(s) mentioned below was evaluated respectively.

Pretest Mode	Description
Mode 1	TX Mode

Note:

For the test results, the EUT had been tested with all conditions, but only the worst case was shown in test report.

For AC Power-Line Conducted Emission

Pretest Mode	Description
N/A	N/A

1.7. Block diagram showing the configuration of system tested

During test, Keep EUT is in continuous transmission mode, Both open button and closed button have been tested, The two keys were tested to assess and only record the worst case in the report (Open button).

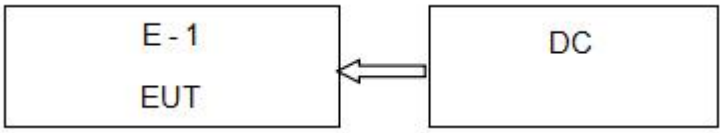

1.8. Test Software and Power Level

RF power setting value	
Channel	Power setting
304.25MHz	Default- Level 2

Note:

1.For the test results, the EUT had been tested with all conditions, and the worst-case mode of data will record in the report.

2.Fixed frequency is triggered by pressing a button.

1.9. Description of Support Units

NO.	Unit	Brand	Model	Description
1	N/A	N/A	N/A	N/A
2	N/A	N/A	N/A	N/A

1.10. Laboratory Information

Company Name	:	Shanghai ATBL Technology Co., Ltd.
Address	:	5-6/F., Unit 1, No 8, Free Trade One Life Science and Sci-Tech Industrial Park No. 160, Basheng Road, Pudong New District Shanghai City, People's Republic of China
Telephone	:	+86(0)21-51298625
FCC-Registration No	:	485917
Designation Number	:	CN1306
A2LA-Lab Cert. No.	:	6184.01

1.11. Measurement Uncertainty

The reported uncertainty of measurement y±U, where expended uncertainty U is based on a standard uncertainty multiplied by a coverage factor of k=2, providing a level of confidence of approximately 95 %.

No.	Item	Uncertainty
1	RF output power, conducted	±0.68dB
2	Unwanted Emissions, conducted	±2.988dB
3	All emissions, radiated 9K-30MHz	±2.84dB
4	All emissions, radiated 30M- 1GHz	±4.39dB
5	All emissions, radiated 1G-6GHz	±5.10dB
6	All emissions, radiated>6G	±5.48dB
7	Conducted Emission (9kHz- 150kHz)	±2.79dB
8	Conducted Emission (150kHz-30MHz)	±2.80dB

1.12. Equipment List

1.12.1. For AC Power-Line Conducted Emission

Kind of Equipment	Manufacturer	Type No.	Serial No.	equipment number	Calibrated until	Calibrated due until	Cal. Interval
EMI Test Receiver	R&S	ESPI	100679	SHATBL-E012	2025.03.17	2026.03.16	1 year
LISN	R&S	ENV216	101300	SHATBL-E013	2025.03.17	2026.03.16	1 year
LISN	R&S	ENV216	100333	SHATBL-E041	2025.03.17	2026.03.16	1 year
CE Cable	Chuangcexing	2M	EMI0014	SHATBL-E014	N/A	N/A	N/A
Temperature & Humidity	Deli	Deli	EMI0015	SHATBL-E015	2025.08.01	2026.07.31	1 year
Testing Software	FALA	EZ-EMC(Ver.EMC-CON 3A1.1)	EMI0044	SHATBL-E044	N/A	N/A	N/A

1.12.2. For Radiated Spurious Emission

Kind of Equipment	Manufacturer	Type No.	Serial No.	equipment number	Calibrated until	Calibrated due until	Cal. Interval
Signal analyzer	Agilent	N9020A	MY50200811	SHATBL-E017	2025.03.17	2026.03.16	1 year
Amplifier	JPT	JPA0118-55-303A	1910001800055000	SHATBL-E006	2025.03.24	2026.03.23	1 year
Amplifier	JPT	JPA-10M1G32	21010100035001	SHATBL-E005	2025.03.17	2026.03.16	1 year
Antenna/Turn table Controller	Brilliant	N/A	N/A	SHATBL-E007	N/A	N/A	N/A
Loop Antenna(9kHz-30MHz)	Daze	ZN30900C	20077	SHATBL-E042	2025.05.13	2026.05.12	1 year
Bilog Antenna	SCHWARZBECK	VULB 9168	01174	SHATBL-E008	2025.05.20	2026.05.19	1 year
Broad-band Horn Antenna	SCHWARZBECK	BBHA 9120D	02334	SHATBL-E009	2025.05.20	2026.05.19	1 year
Horn Antenna	COM-POWER	AH-1840	10100008	SHATBL-E043	2025.07.27	2026.07.26	1 year
Thermometer	DeLi	N/A	N/A	SHATBL-E015	2025.08.01	2026.07.31	1 year
Test Software	FALA	EMC-RI(Ver.4A2)	N/A	N/A	N/A	N/A	N/A
Wideband radio communication tester	R&S	CMW500	101331	SHATBL-W044	2025.07.28	2026.07.27	1 year
Spectrum analyzer	R&S	FSV40-N	101761	SHATBL-W036	2025.07.28	2026.07.27	1 year

1.12.3. For Conducted Test

Kind of Equipment	Manufacturer	Type No.	Serial No.	equipment number	Calibrated until	Calibrated due until	Cal. Interval
Power sensor	DARE	RPR3006W	16I00054SN016	SHATBL-W008	2025.07.28	2026.07.27	1 year
Adjustable Attenuator	Agilent	8494B	MY42144015	SHATBL-W009	2025.07.28	2026.07.27	1 year
Adjustable Attenuator	Agilent	8496B	MY42143776	SHATBL-W010	2025.07.28	2026.07.27	1 year
Environmental Test Chamber	KSON	THS-B6C-150	9159K	SHATBL-W019	2025.03.17	2026.03.16	1 year
Signal analyzer	Keysight	N9020A	MY50510136	SHATBL-W003	2025.07.18	2026.07.17	1 year
Vector signal generator	Agilent	N5182A	MY48180764	SHATBL-W043	2025.07.18	2026.07.17	1 year
Analog signal generator	Keysight	N5182B	MY57300196	SHATBL-W005	2025.07.18	2026.07.17	1 year
Wideband radio communication tester	R&S	CMW500	101331	SHATBL-W007	2025.07.28	2026.07.27	1 year
Switch Box	Cesheng	smu1003	WCS20221215	SHATBL-W046	2025.03.19	2026.03.18	1 year
Thermometer	DeLi	N/A	N/A	SHATBL-W011	2025.08.01	2026.07.31	1 year
Test Software	Cesheng	WCS-WCN	N/A	SHATBL-W021	N/A	N/A	N/A

Remark:

Calibration duration for above equipment is 1 year.

2. Test Result

2.1. Conducted emission measurement

2.1.1.power line conducted emission limits
The radio frequency voltage that is conducted back onto the AC power line on any frequency or frequencies, within the band 150 kHz to 30 MHz, shall not exceed the limits in the following table.

FREQUENCY (MHz)	Class B (dBuV)		Standard
	Quasi- peak	Average	
0.15 -0.5	66 - 56 *	56 - 46 *	Part 15.207
0.50 -5.0	56.00	46.00	Part 15.207
5.0 -30.0	60.00	50.00	Part 15.207

Note:
(1) .The tighter limit applies at the band edges.
(2) .The limit of " * " marked band means the limitation decreases linearly with the logarithm of the frequency in the range.

The following table is the setting of the receiver

Receiver Parameters	Setting
Attenuation	10 dB
Start Frequency	0.15 MHz
Stop Frequency	30 MHz
IF Bandwidth	9 kHz

2.1.2. Test Procedure

a.The EUT is 0.8 m from the horizontal ground plane and 0.4 m from the vertical ground plane with EUT being connected to the power mains through a line impedance stabilization network (LISN). All other support equipment are powered from additional LISN(s). The LISN provides 50 Ohm/ 50uH of coupling impedance for the measuring instrument.
b.Interconnecting cables that hang closer than 40 cm to the ground plane shall be folded back and forth in the center forming a bundle 30 to 40 cm long.
c.I/O cables that are not connected to a peripheral shall be bundled in the center. The end of the cable may be terminated, if required, using the correct terminating impedance. The overall length shall not exceed 1 m.
d.LISN is at least 80 cm from the nearest part of EUT chassis.
e.For the actual test configuration, please refer to the related Item – EUT Test Photos.

2.1.3.Test Setup

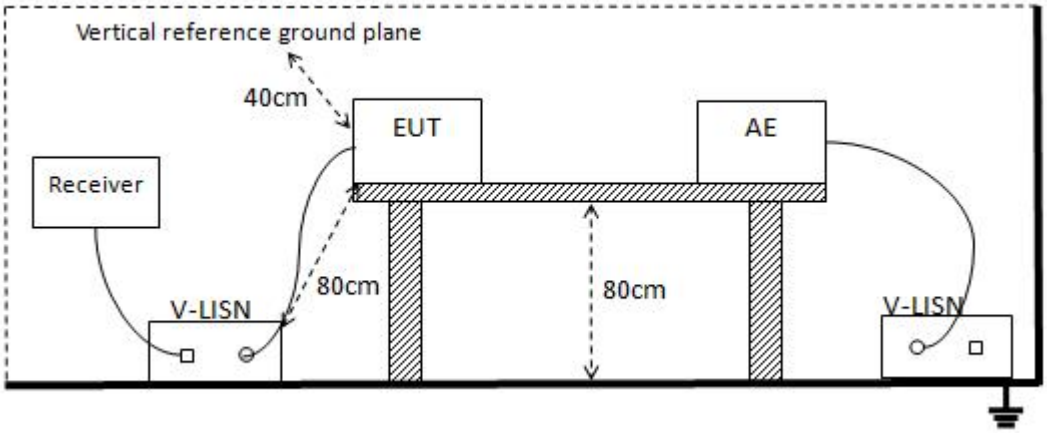

2.1.4.EUT operating conditions

The EUT was configured for testing in a typical fashion (as a customer would normally use it).
The EUT has been programmed to continuously transmit during test. This operating condition was tested and used to collect the included data.

2.1.5. Test Results

Note: EUT is only power by battery, So it is not applicable for this test.

2.2. Radiated emission measurement

2.2.1. Radiated Emission Limits

In case the emission fall within the restricted band specified on Part 15.205(a), then the Part 15.209(a)and Part 15.231(b) limit in the table below has to be followed.

FREQUENCIES (MHz)	FIELD STRENGTH (microvolts/meter)	MEASUREMENT DISTANCE (meters)
0.009 ~ 0.490	2400/F(kHz)	300
0.490 ~ 1.705	24000/F(kHz)	30
1.705 ~ 30.0	30	30
30 ~ 88	100	3
88 ~ 216	150	3
216 ~ 960	200	3
Above 960	500	3

According to § 15.231(b), the field strength of emissions from intentional radiators operated within these frequency bands shall comply with the following:

Fundamental frequency (MHz)	Field strength of fundamental (microvolts/meter)	Field strength of spurious emissions (microvolts/meter)
40.66-40.70	2,250	225
70-130	1,250	125
130-174	[1] 1,250 to 3,750	[1] 125 to 375
174-260	3,750	375
260-470	[1] 3,750 to 12,500	[1] 375 to 1,250
Above 470	12,500	1,250

Note:
1.Linear interpolations.
2.The lower limit shall apply at the transition frequencies.
3.Emission level (dBuV/m) = 20 log Emission level (uV/m).
4.As shown in 15.35(b), for frequencies above 1000MHz, the field strength limits are based on average detector, however, the peak field strength of any emission shall not exceed the maximum permitted average limits, specified above by more than 20dB under any condition of modulation.

Limits of restricted frequency bands:

FREQUENCY (MHz)	FREQUENCY (MHz)	FREQUENCY (MHz)	FREQUENCY (GHz)
0.090-0.110	16.42-16.423	399.9-410	4.5-5.15
0.495-0.505	16.69475-16.69525	608-614	5.35-5.46
2.1735-2.1905	16.80425-16.80475	960-1240	7.25-7.75
4.125-4.128	25.5-25.67	1300-1427	8.025-8.5
4.17725-4.17775	37.5-38.25	1435-1626.5	9.0-9.2
4.20725-4.20775	73-74.6	1645.5-1646.5	9.3-9.5
6.215-6.218	74.8-75.2	1660-1710	10.6-12.7
6.26775-6.26825	108-121.94	1718.8-1722.2	13.25-13.4
6.31175-6.31225	123-138	2200-2300	14.47-14.5
8.291-8.294	149.9-150.05	2310-2390	15.35-16.2
8.362-8.366	156.52475-156.52525	2483.5-2500	17.7-21.4
8.37625-8.38675	156.7-156.9	2690-2900	22.01-23.12
8.41425-8.41475	162.0125-167.17	3260-3267	23.6-24.0
12.29-12.293	167.72-173.2	3332-3339	31.2-31.8
12.51975-12.52025	240-285	3345.8-3358	36.43-36.5
12.57675-12.57725	322-335.4	3600-4400	Above 38.6
13.36-13.41			

Spectrum Parameter	Setting
Detector	Peak
Attenuation	Auto
Start Frequency	1000 MHz
Stop Frequency	10th carrier harmonic
RB / VB (emission in restricted band)	1MHz / 3MHz

Receiver Parameter	Setting
Attenuation	Auto
Start ~ Stop Frequency	9kHz~90kHz / RB 200Hz for PK & AV
Start ~ Stop Frequency	90kHz~110kHz / RB 200Hz for QP
Start ~ Stop Frequency	110kHz~490kHz / RB 200Hz for PK & AV
Start ~ Stop Frequency	490kHz~30MHz / RB 9kHz for QP
Start ~ Stop Frequency	30MHz~1000MHz / RB 120kHz for QP

2.2.2.Test Procedure

a.The measuring distance of at 3 m shall be used for measurements at frequency 0.009MHz up to 1GHz,and above 1GHz.

b.The EUT was placed on the top of a rotating table 0.8 meters(above 1GHz is 1.5 m) above the ground at a 3 meter anechoic chamber. The table was rotated 360 degrees to determine the position of the highest radiation.

c.The height of the equipment shall be 0.8 m(above 1GHz is 1.5 m); the height of the test antenna shall vary between 1 m to 4 m. Horizontal and vertical polarization of the antenna are set to make the measurement.

d.The initial step in collecting conducted emission data is a spectrum analyzer peak detector mode pre-scanning the measurement frequency range. Significant peaks are then marked and then Quasi Peak detector mode re-measured.

e.If the Peak Mode measured value compliance with and lower than Quasi Peak Mode Limit, the EUT shall be deemed to meet QP Limits and then no additional QP Mode measurement performed.

f.For the actual test configuration, please refer to the related Item – EUT Test Photos:

g.Both horizontal and vertical antenna polarities were tested and performed pretest to three orthogonal axis. The worst case emissions were reported.

2.2.3. Test Setup

(A) Radiated Emission Test-Up Frequency Below 30MHz

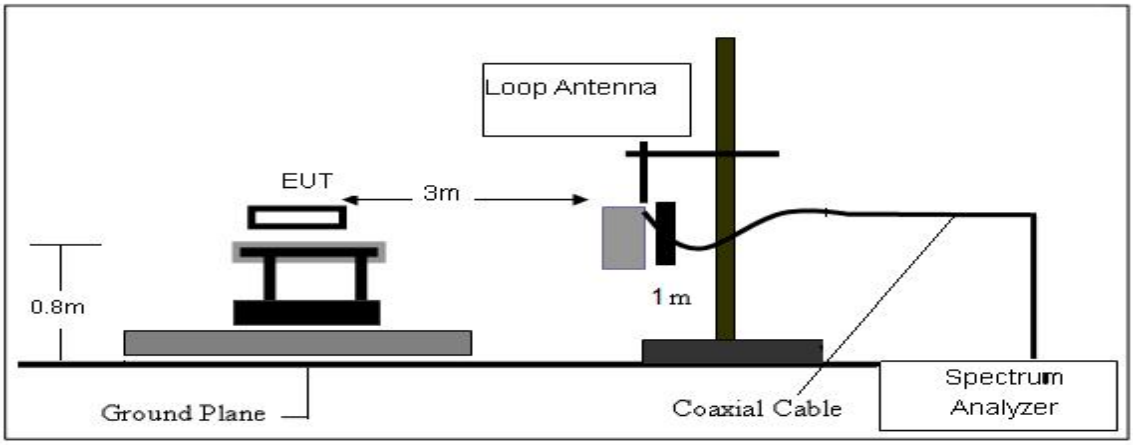

(B) Radiated Emission Test-Up Frequency 30MHz~1GHz

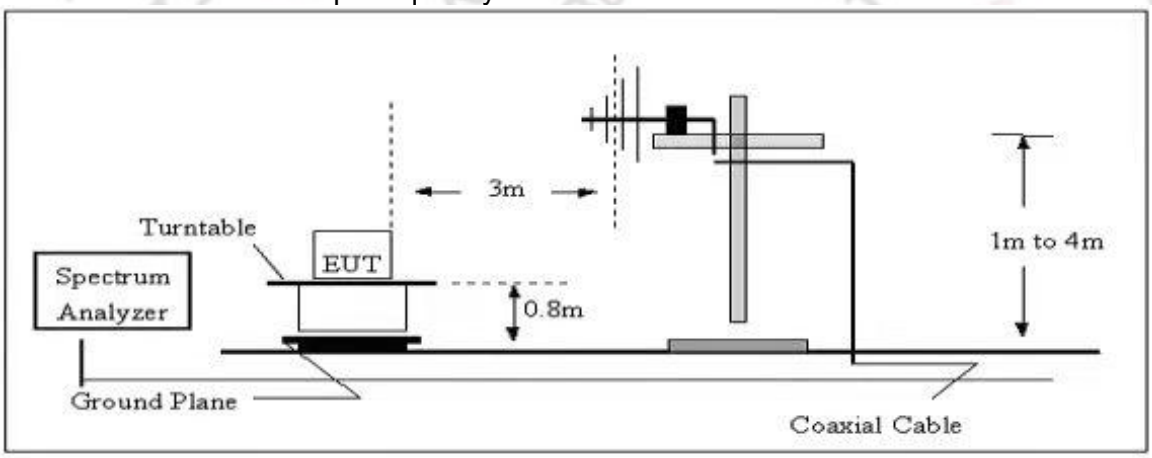

(C) Radiated Emission Test-Up Frequency Above 1GHz

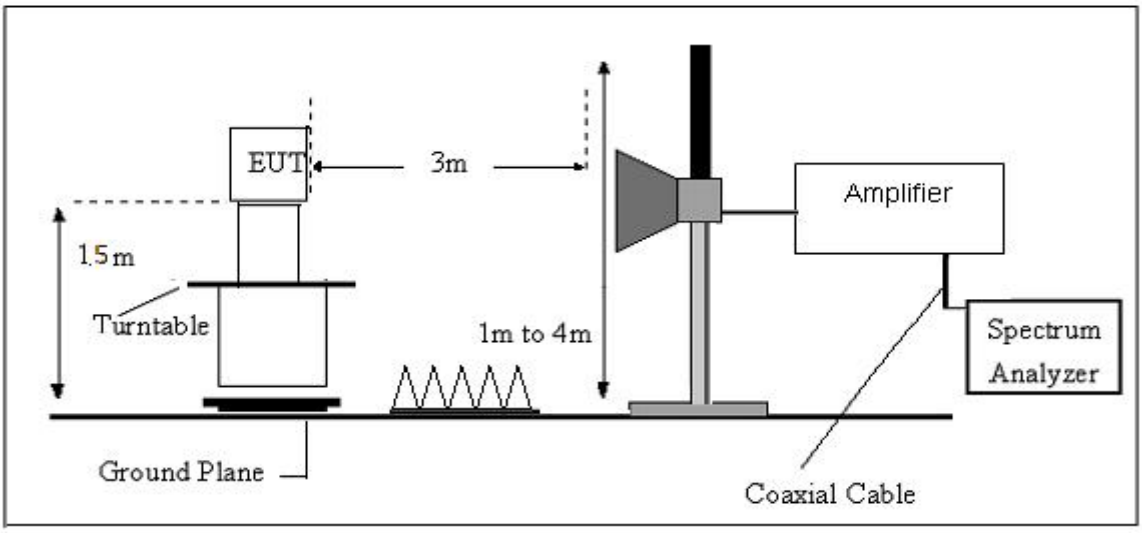

2.2.4.EUT operating conditions

The EUT tested system was configured as the statements of 1.7 Unless otherwise a special operating condition is specified in the follows during the testing.

2.2.5.Field strength calculation

The field strength is calculated by adding the Antenna Factor and Cable Factor and subtracting the Amplifier Gain and Duty Cycle Correction Factor (if any) from the measured reading. The basic equation with a sample calculation is as follows:

FS = RA + AF + CL - AG

Where

FS = Field Strength

CL = Cable Attenuation Factor (Cable Loss)

RA = Reading Amplitude

AG = Amplifier Gain

AF = Antenna Factor

For example

Factor=AF+CL-AG

2.2.6.Test Results

Field Strength of Fundamental Emissions and Field strength of spurious emissions Value					
Operating Frequency (MHz)	Field Strength (dBuV/m)	Detector	Limit @3m (dBuV/m)	Margin (dB)	Antenna
304.25	**62.42**	Peak	94.98	-32.56	Horizontal
	62.42	Peak	94.98	-32.56	Vertical
608.50	42.07	Peak	74.98	-32.91	Horizontal
	29.54	Peak	74.98	-45.44	Vertical
912.75	34.91	Peak	74.98	-40.07	Horizontal
	34.88	Peak	74.98	-40.1	Vertical
304.25	55.44	Avg	74.98	-19.54	Horizontal
	55.44	Avg	74.98	-19.54	Vertical
608.50	35.09	Avg	54.98	-19.89	Horizontal
	22.56	Avg	54.98	-32.42	Vertical
912.75	27.93	Avg	54.98	-27.05	Horizontal
	27.9	Avg	54.98	-27.08	Vertical

Note:

Fundamental AV value =PK Emission +20*log(duty cycle)Where the duty factor is calculated from following formula:20 log (Duty cycle) =20Log(44.76%)=-6.98dB, Please see page 25.

(Radiated Emission<30MHz (9kHz-30MHz, H-field))

Temperature:	25℃	Relative Humidity	54%RH
Test Voltage:	DC 3V From Battery	Polarization:	N/A
Test Mode:	TX Mode		

Note:

1.The amplitude of spurious emissions which are attenuated by more than 20dB below the permissible value has no need to be reported.

2.Distance extrapolation factor =40 log (specific distance/test distance)(dB);

Limit line = specific limits(dBuv) + distance extrapolation factor.

3. The verdict please refer to the A.6 field strength of fundamental emissions and field strength of spurious emissions value.

4.Limit field strength of fundamental:

20*log(((12500-3750)*((fc-260)/(470-260))+3750)dBuV/m+20dB=94.98dBuV/m@3m (PK).

5. Limit field strength of harmonics: 20*log(((1250-375)*((fc-260)/(470-260))+375)dBuV/m+20dB =74.98dBuV/m@3m (PK).

For 30MHz -1000MHz:

Remark:
1. Margin = Result (Result =Reading + Factor)–Limit
2. Factor= Antenna factor+Cable attenuation factor(cable loss)-Amplifier gain
3. " * ": Fundamental frequency.
4. " # ": Harmonic frequency.

Temperature:	25℃	Relative Humidity:	54%RH
Test Voltage:	DC 3V From Battery	Phase:	Horizontal
Test Mode:	TX Mode		

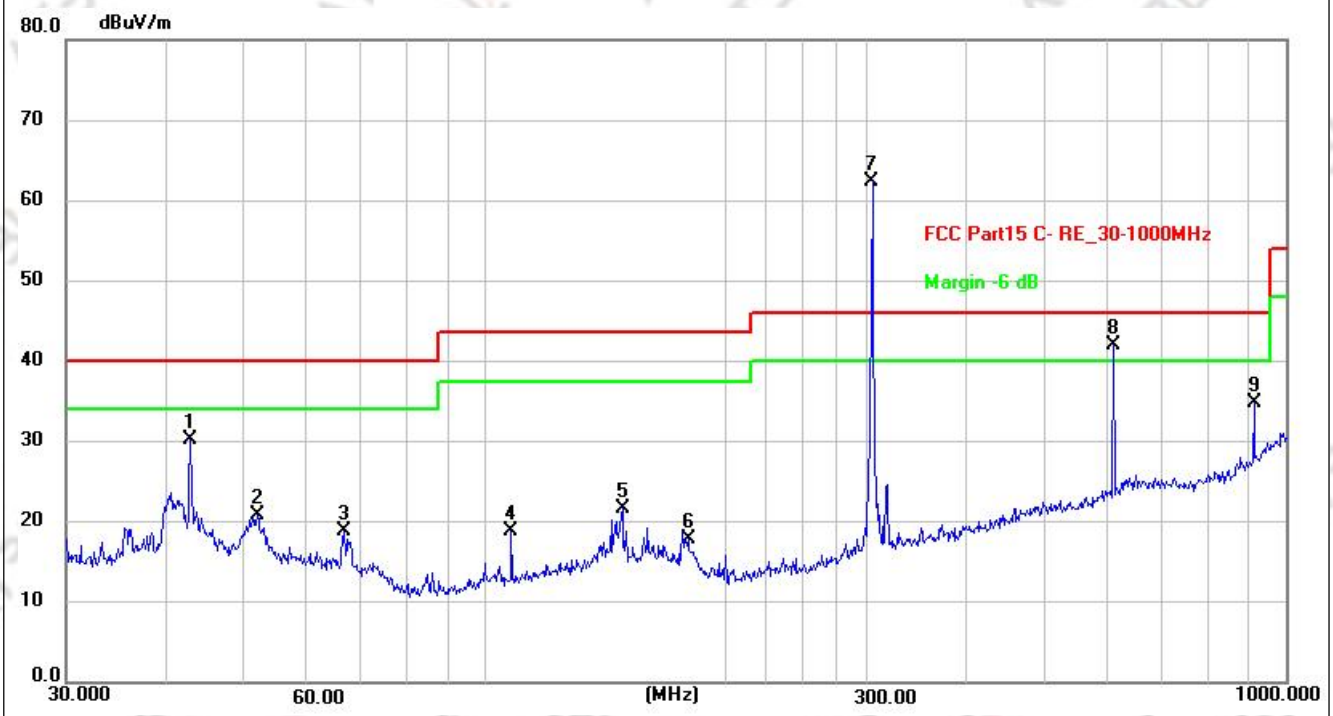

No.	Frequency (MHz)	Reading (dBuV)	Factor (dB/m)	Level (dBuV/m)	Limit (dBuV/m)	Margin (dB)	Det.
1	42.8998	53.35	-23.11	30.24	40.00	-9.76	peak
2	52.0251	44.88	-24.05	20.83	40.00	-19.17	peak
3	66.7325	44.54	-25.74	18.80	40.00	-21.20	peak
4	107.8877	46.19	-27.24	18.95	43.50	-24.55	peak
5	148.4410	46.01	-24.40	21.61	43.50	-21.89	peak
6	179.3863	43.41	-25.57	17.84	43.50	-25.66	peak
7 *	304.25	84.97	-22.55	62.42	94.98	-32.56	peak
8 #	608.50	57.19	-15.12	42.07	74.98	-32.91	peak
9 #	912.75	45.16	-10.25	34.91	74.98	-40.07	peak

Temperature:	25℃	Relative Humidity:	54%RH
Test Voltage:	DC 3V From Battery	Phase:	Vertical
Test Mode:	TX Mode		

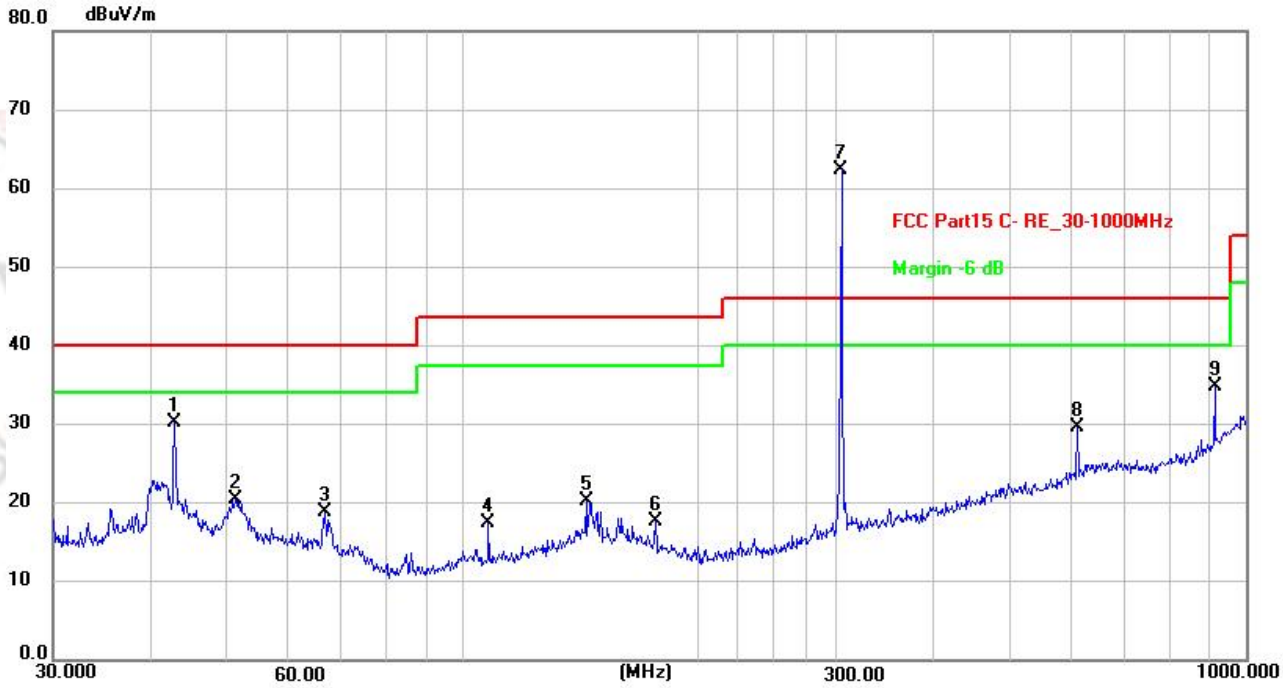

No.	Frequency (MHz)	Reading (dBuV)	Factor (dB/m)	Level (dBuV/m)	Limit (dBuV/m)	Margin (dB)	Det.
1	42.8998	53.35	-23.11	30.24	40.00	-9.76	peak
2	51.3005	44.35	-23.99	20.36	40.00	-19.64	peak
3	66.7325	44.54	-25.74	18.80	40.00	-21.20	peak
4	107.8877	44.63	-27.24	17.39	43.50	-26.11	peak
5	143.8295	44.92	-24.71	20.21	43.50	-23.29	peak
6	176.2686	42.99	-25.25	17.74	43.50	-25.76	peak
7 *	304.25	84.97	-22.55	62.42	94.98	-32.56	peak
8 #	608.50	44.66	-15.12	29.54	74.98	-45.44	peak
9 #	912.75	45.13	-10.25	34.88	74.98	-40.10	peak

For 1000MHz -5000MHz:

Remark:
1. Margin = Result (Result =Reading + Factor)–Limit
2. Factor= Antenna factor+Cable attenuation factor(cable loss)-Amplifier gain

Temperature:	25℃	Relative Humidity:	54%RH
Test Voltage:	DC 3V From Battery	Phase:	Horizontal
Test Mode:	TX Mode		

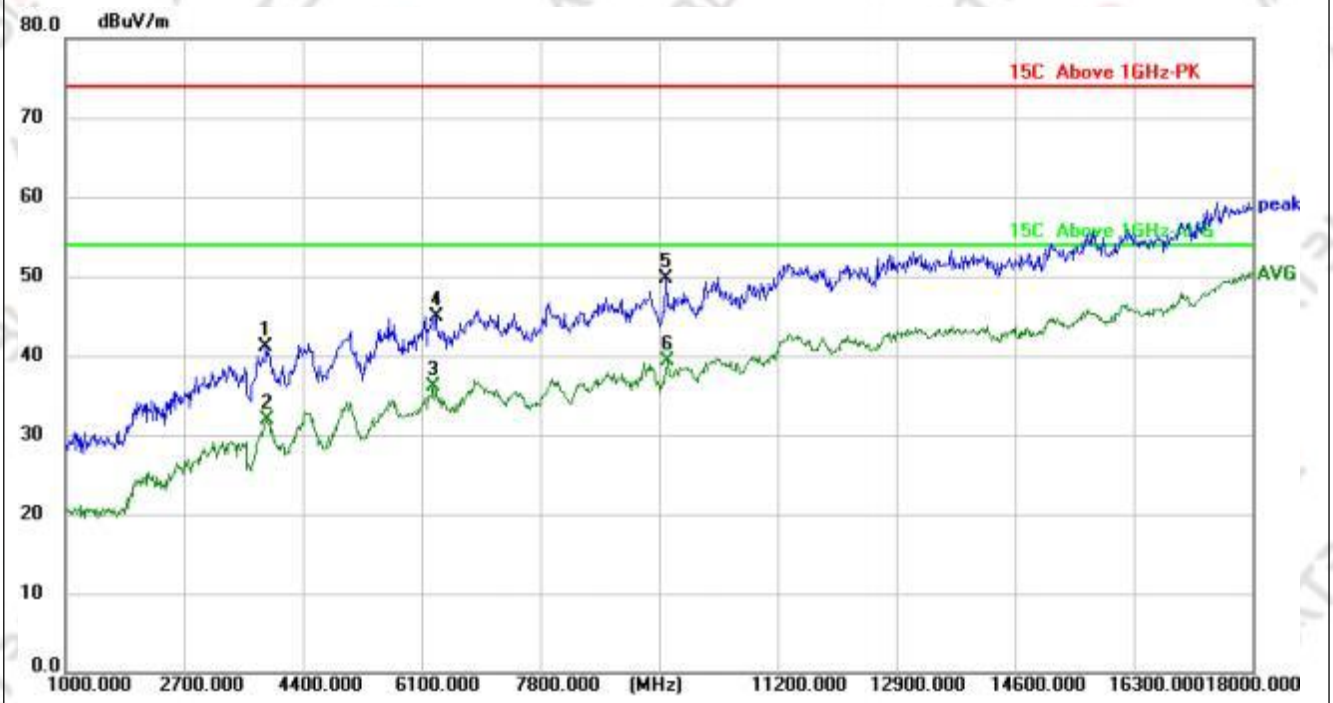

No.	Frequency (MHz)	Reading (dBuV)	Factor (dB/m)	Level (dBuV/m)	Limit (dBuV/m)	Margin (dB)	Det.
1	3873.000	50.26	-9.21	41.05	74.00	-32.95	peak
2	3890.000	41.05	-9.17	31.88	54.00	-22.12	AVG
3	6270.000	37.84	-1.75	36.09	54.00	-17.91	AVG
4	6304.000	46.60	-1.65	44.95	74.00	-29.05	peak
5	9602.000	45.25	4.38	49.63	74.00	-24.37	peak
6	9619.000	34.85	4.41	39.26	54.00	-14.74	AVG

Temperature:	25℃	Relative Humidity:	54%RH
Test Voltage:	DC 3V From Battery	Phase:	Vertical
Test Mode:	TX Mode		

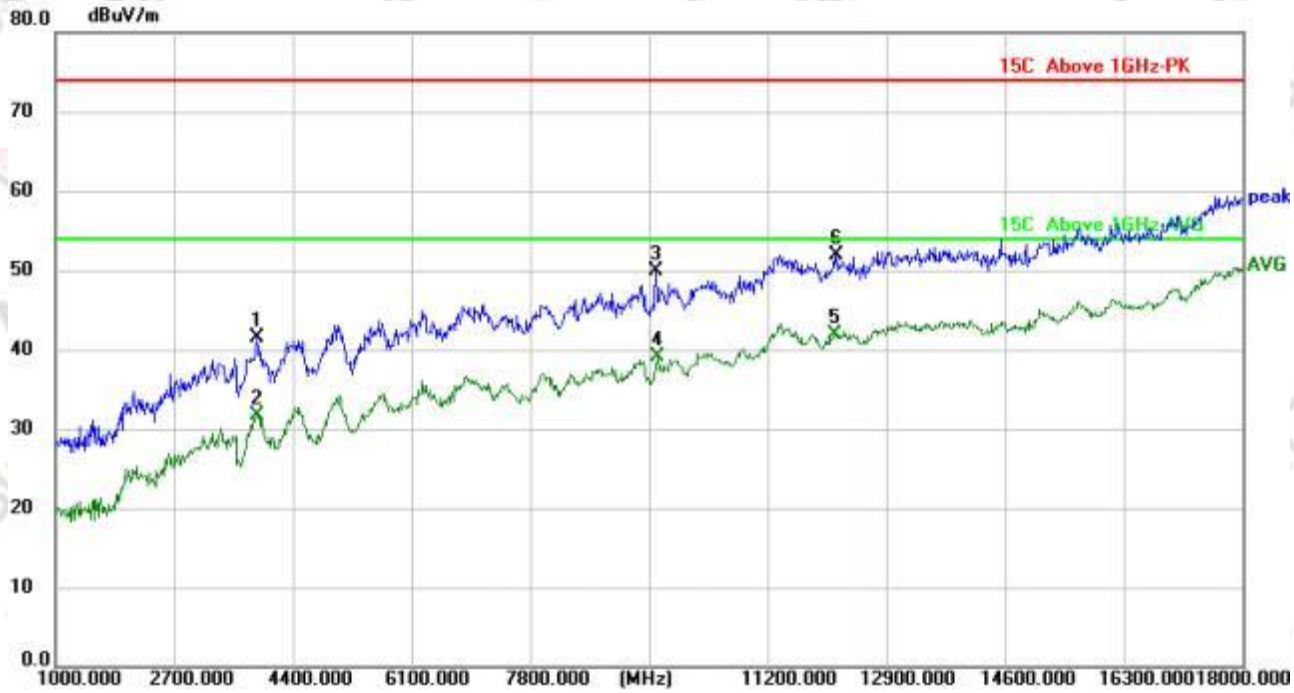

No.	Frequency (MHz)	Reading (dBuV)	Factor (dB/m)	Level (dBuV/m)	Limit (dBuV/m)	Margin (dB)	Det.
1	3890.000	50.61	-9.17	41.44	74.00	-32.56	peak
2	3890.000	40.91	-9.17	31.74	54.00	-22.26	AVG
3	9602.000	45.46	4.38	49.84	74.00	-24.16	peak
4	9619.000	34.61	4.41	39.02	54.00	-14.98	AVG
5	12152.000	33.58	8.41	41.99	54.00	-12.01	AVG
6	12186.000	43.44	8.43	51.87	74.00	-22.13	peak

2.3. Bandwidth Test

2.3.1.Limit

The bandwidth of the emission shall be no wider than 0.25% of the center frequency for devices operating above 70 MHz and below 900 MHz. For devices operating above 900 MHz, the emission shall be no wider than 0.5% of the center frequency. Bandwidth is determined at the points 20 dB down from the modulated carrier.

Spectrum Parameter	Setting
Attenuation	Auto
Span Frequency	> Measurement Bandwidth
RB	10 kHz
VB	30 kHz
Detector	Peak
Trace	Max Hold
Sweep Time	Auto

2.3.2.Test Setup

2.3.3.EUT operating conditions

The EUT tested system was configured as the statements of 1.7 Unless otherwise a special operating condition is specified in the follows during the testing.

2.3.4.Test Results

Centre Frequency (MHz)	20dB Bandwidth (kHz)	Limit(kHz)	Results
304.25	51.30	760.625	PASS

304.25MHz

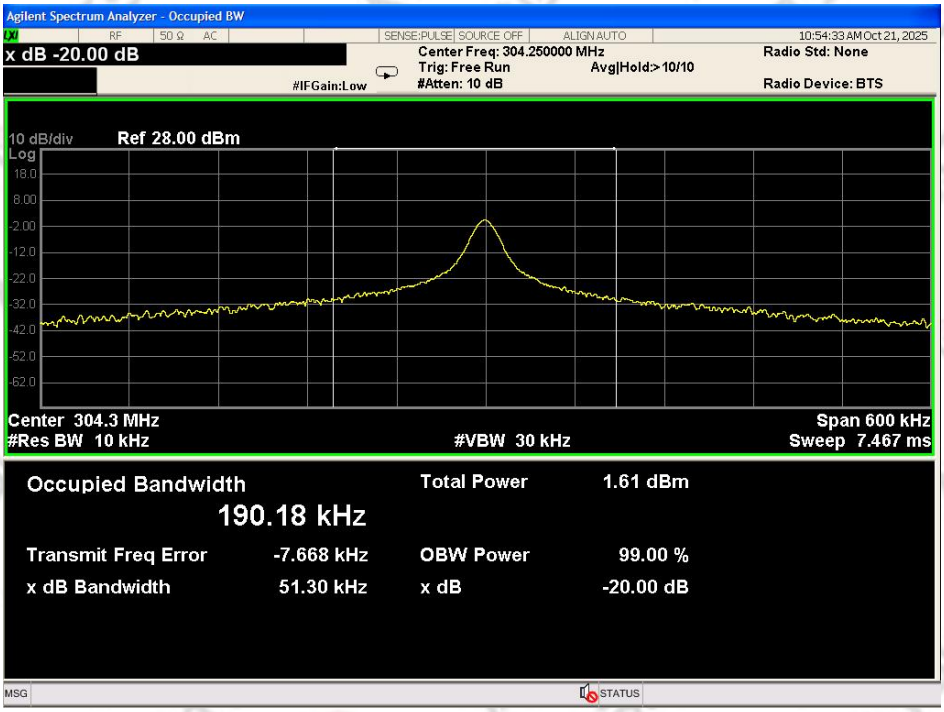

2.4. Duty Cycle

2.4.1.Test Procedure

The EUT was directly connected to the spectrum analyzer and antenna output port as show in the block diagram below.

The Duty Cycle Was Determined By The Following Equation: To Calculate The Actual Field Intensity,The Duty Cycle Correction Factor In Decibel Is Needed For Later Use And Can Be Obtained From Following Conversion.

Duty Cycle(%)=Total On Interval In A Complete Pulse Train/ Length Of A Complete Pulse Train * %

Duty Cycle Correction Factor(Db)=20 * Log10(Duty Cycle(%)

2.4.2. Test Setup

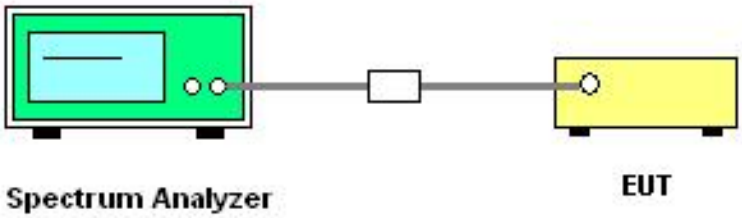

2.4.3.EUT operating conditions

TX mode.

2.4.4.Test Results

Ton(ms)	7*0.384+19*0.752=16.97
T period(ms)	37.92
Duty Cycle (%)	44.76
Duty Cycle Correction Factor(dB)	-6.98

Test photo:

2.5. Automatically Deactivate

2.5.1.Standard requirement

A manually operated transmitter shall employ a switch that will automatically deactivate the transmitter within not more than 5 seconds of being released.

2.5.2.Test Procedure

The EUT was directly connected to the spectrum analyzer and antenna output port as show in the block diagram below.

Spectrum Setting: RBW= 1MHz, VBW=3MHz, Sweep time = 15s.

Set the EUT to transmit by manually operated. Use the "View" function of SPA to find the transmission time of being released.

2.5.3. Test Setup

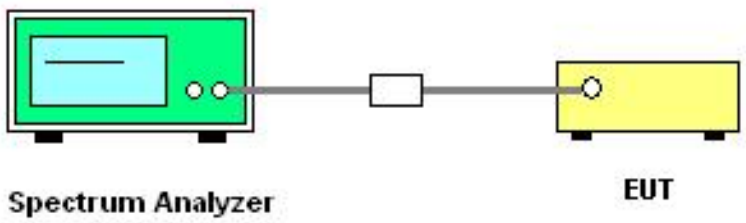

2.5.4.Test Results

304.25MHz		
Activation time	Limit(Sec)	Result
1.98 s	5 s	Pass

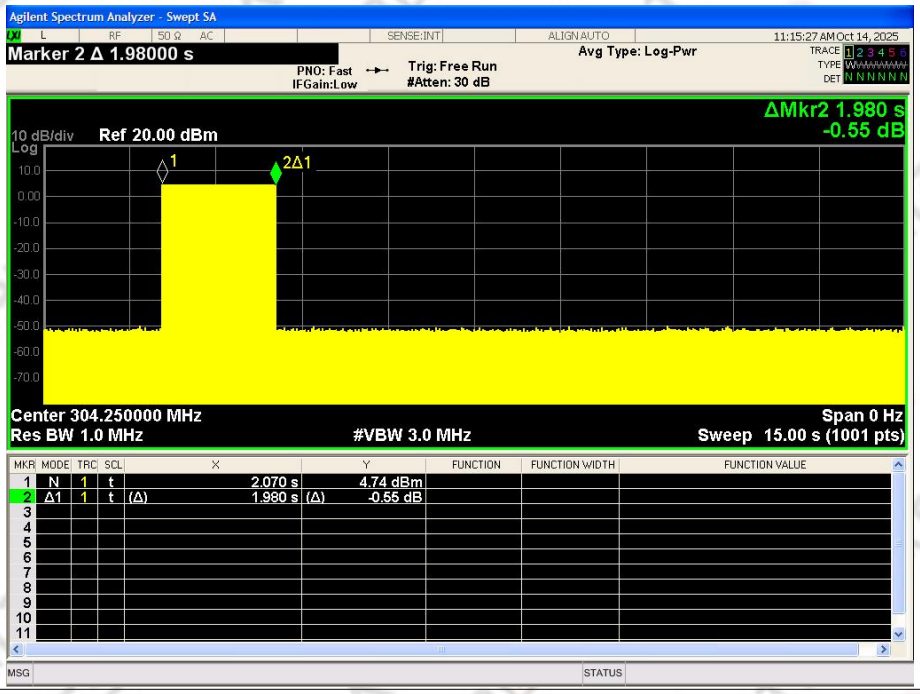

2.6. Antenna Requirement

2.6.1.Standard requirement
FCC Part 15 Paragraph 15.203, an intentional radiator shall be designed to ensure that no antenna other than that furnished by the responsible party shall be used with the device.
The use of a permanently attached antenna to the intentional radiator shall be considered sufficient to comply with the provisions of this section.

2.6.2. EUT Antenna
The EUT antenna is PCB Antenna.It conforms to the standard requirements.

3. Test Setup Photographs

Please refer to the Appendix F.

4. External and Internal photos of the EUT

Please refer to the Appendix G.

Please refer to the Appendix H.

※※※※※END OF THE REPORT※※※※※