Data Sheet

# AW5161P2 Series

## 2.4GHz ZigBee Wireless Communication Module

DS01010101 V1.01 Date: 2020/04/17

**Product Datasheet**

## Overview

The AW5161P2 series ZigBee module developed by Guangzhou ZHIYUAN Electronics Co., Ltd. is a low-power and high-reliability ZigBee module based on JN516x series wireless SoC from NXP. It provides a complete application integration solution based on IEEE802.15.4 standard ISM (2.4~2.5GHz) band, supports Fastzigbee protocol, and can be quickly applied to industrial control, industrial data acquisition, agricultural control, mine personnel positioning, smart home, smart remote control and other occasions.

The AW5161P2 series ZigBee module integrates the complete RF transceiver circuit into a module, and embeds the complex communication protocol of wireless communication product into its built-in SoC, which greatly simplify the development process, make products available to the market faster, increase the competitiveness of products, so that users can better grasps the opportunities.

## Features

- Frequency range: 2400~2483.5MHz.
- Operating voltage: 2.0~3.6 V.
- Receiving current: 28mA
- Sleep current: 412nA
- Transmitting current: 132mA
- Max Transmitting power: 20dBm
- Receiving sensitivity: -95dBm
- Transmission speed: 250kbps
- IPEX interface, Ceramic antenna
- 3.3V interface level
- UART communication port
- Support for sleep and wake-up
- Temperature range:-40~+85℃

## Applications

- Industrial control
- Industrial data acquisition
- Agricultural control
- Mine personnel positioning
- Smart home

## Odering Information

Note: See the related product selection table.

## Revision History

| Version | Date | Description |
|---|---|---|
| V1.00 | 2020/04/17 | Created the document. |


©2018 Guangzhou ZHIYUAN Electronics Co., Ltd.

# Content

1. Introduction.....1
1.1 Introduction.....1
1.2 Module Naming Rule.....1
1.3 Product Selection.....2
2. Dimensions.....3
3. Interface.....4
3.1 Pin Assignment.....4
3.2 Pin Description.....4
4. Electrical Parameters.....6
4.1 Operating Conditions.....6
4.2 Operating Environment.....6
4.3 Power consumption.....6
5. RF Parameters.....7
6. Production Guidance.....8
6.1 Recommended production reflow temperature curve.....8
6.2 Recommended production reflow temperature and time comparison table.....8
7. Hardware Design Precautions.....9
7.1 Smallest System.....9
7.2 Recommended System.....9
8. FCC Statement.....10
9. Disclaimer.....11


©2018 Guangzhou ZHIYUAN Electronics Co., Ltd.

# 1. Introduction

## 1.1 Introduction

The AW5161P2 series module developed by Guangzhou ZHIYUAN Electronics Co., Ltd. is a series of low-power, high-reliability ZigBee modules based on the JN516x series wireless SoC from NXP, and provides a complete application integration solution based on IEEE802.15.4 standard ISM band. The module has been inspected and certified by authoritative RF instruments. With years of market experience and actual industry application demand, the module integrates extremely complex communication protocol into the built-in SoC, supports the transparent transmission mode of serial port, and integrates convenient and easy-to-use self-organized network function, provides multi-channel configurable AD, IO, PWM interfaces, greatly simplifying the complicated development process of wireless product, making users' product put onto the market with lower cost. Due to its ultra-small size and ultra-low power consumption, the module is widely used in a variety of smart devices.

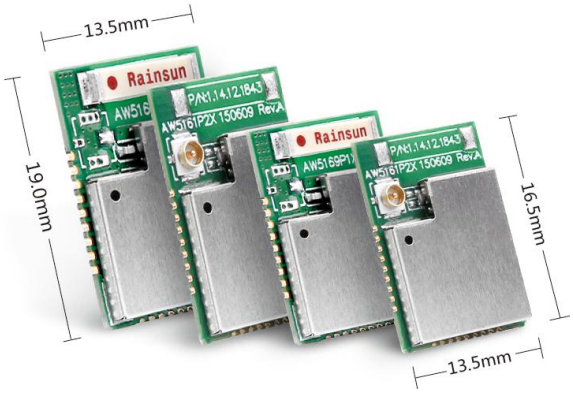


Figure 1-1: AW5161P2 series ZigBee module product image

## 1.2 Module Naming Rule

Figure 1-2 shows the naming rule of AW5161P2 series ZigBee module. All default factory settings of this series of module comply with the naming rule. Please confirm the model number of module is consistent with your needs before purchasing it.


©2018 Guangzhou ZHIYUAN Electronics Co., Ltd.

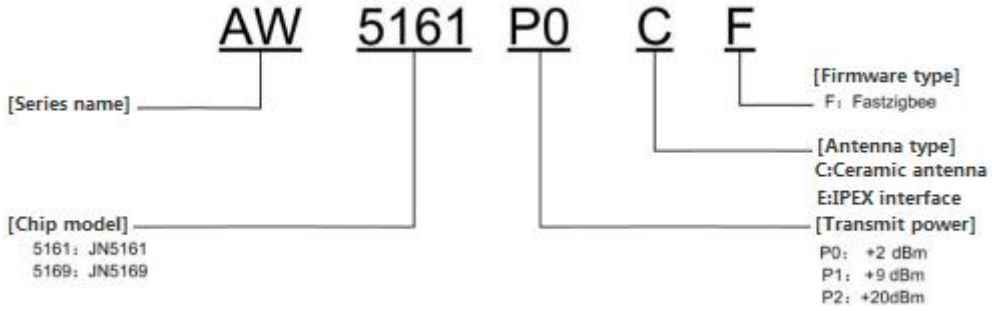


Figure 1-2: Product naming rule

## 1.3 Product Selection

Table 1-1: Product model list of AW5161P2 series ZigBee module

| Model | RF Interface Type | Max RF Power | Firmware | Dimensions | FCC | CE |
|---|---|---|---|---|---|---|
| AW5161P2EF | IPEX RF connector | +20dBm | Fastzigbee | 13.5*19.0*2.25mm | | |
| AW516P2CF | Ceramic antenna | +20dBm | Fastzigbee | 13.5*19.0*2.25mm | | |


©2018 Guangzhou ZHIYUAN Electronics Co., Ltd.

## 2. Dimensions

Please refer to Figure 2-1 for the detailed dimensions of AW5161P2 series ZigBee module.

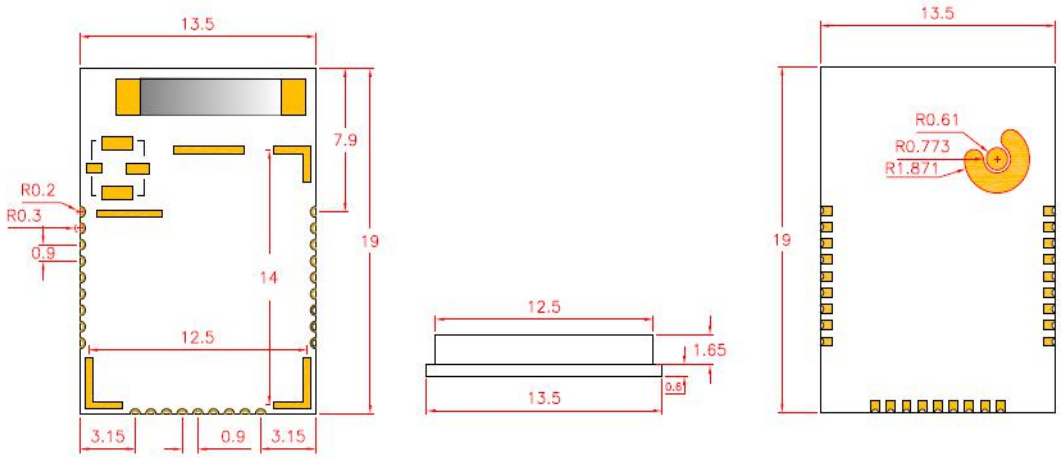


Top view Side view Bottom view

Figure 2-1: AW5161P2 series ZigBee module dimensions (unit: mm)


©2018 Guangzhou ZHIYUAN Electronics Co., Ltd.

# 3. Interface

## 3.1 Pin Assignment

All models of AW5161P2 series ZigBee module have same pin assignment, as shown in Figure 3-1.

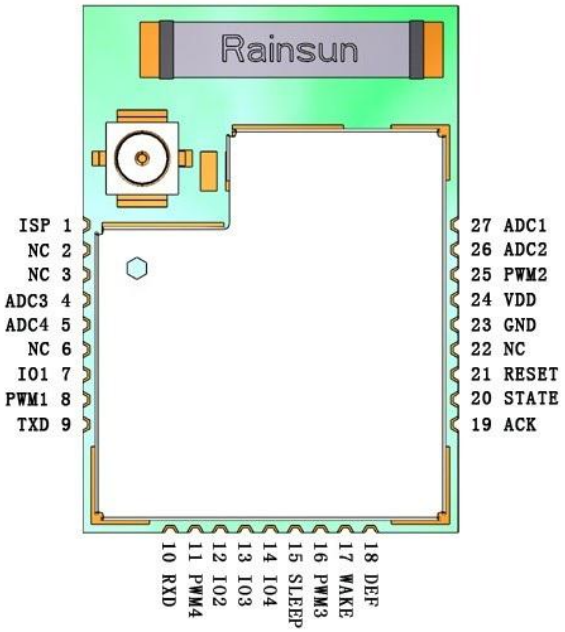


Figure 3-1: Pin assignment

## 3.2 Pin Description

Table 3-1 shows the pin function of AW5161P2 series ZigBee module. The description is only specially for the AW5161P2 series ZigBee module using Fastzigbee firmware.

Table 3-1: Pin description

| Pin No. | Pin Name | Type | Description |
|---|---|---|---|
| 1 | ISP | I | Pull down the pin and reset it, and keep it low for more than 100ms after reset to enter upgrade mode. |
| 2 | NC | - | - |
| 3 | NC | - | - |
| 4 | ADC3 | I | ADC input |
| 5 | ADC4 | I | ADC input |
| 6 | NC | - | - |
| 7 | IO1 | I/O | I/O. It is used as JOIN function when self-organized network: the coordinator allows End Devices or Router Devices to join the network, or, End Devices or Router Devices join the network through it. |
| 8 | PWM1 | O | PWM output |


©2018 Guangzhou ZHIYUAN Electronics Co., Ltd.

| Pin No. | Pin Name | Type | Description |
|---|---|---|---|
| 9 | TXD | O | Data transmitting |
| 10 | RXD | I | Data receiving |
| 11 | PWM4 | O | PWM output |
| 12 | IO2 | I/O | I/O, it is used as DETECT function when self-organized network: the coordinator builds the network. |
| 13 | IO3 | I/O | I/O |
| 14 | IO4 | I/O | I/O |
| 15 | SLEEP | I | The module enters the sleep mode when it is low level. It is only available to terminal devices. |
| 16 | PWM3 | O | PWM output. |
| 17 | WAKE | I | The terminal device in the sleep mode is waked up when the fall edge occurs on the pin. The low level on the pin prevents the terminal device from entering the sleep mode. |
| 18 | DEF | I | The factory settings are restored when the pin keeps low level 3s. |
| 19 | ACK | O | ACK signal of wireless transmission. |
| 20 | STATE | O | Module networking state. Please refer to the user manual for details. |
| 21 | RESET | I | Reset. The module resets after the pin holds low level 10ms. |
| 22 | BUSY | O | Module state indication. It is high level in the case of data transmission. |
| 23 | GND | S | Ground. |
| 24 | VDD | S | DC +3.3V power supply. |
| 25 | PWM2 | O | PWM output. |
| 26 | ADC2 | I | ADC input. |
| 27 | ADC1 | I | ADC input. |


©2018 Guangzhou ZHIYUAN Electronics Co., Ltd.

# 4. Electrical Parameters

## 4.1 Operating Conditions

Table 4-1: Input power supply range

| Parameter | Description | Min. | Typ. | Max. | Unit |
|---|---|---|---|---|---|
| VDD | Power supply of module | 2.0 | 3.3 | 3.6 | V |

## 4.2 Operating Environment

Table 4-2: Temperature and humidity environment

| Parameter | Name | Range | Unit |
|---|---|---|---|
| TSTG | Storage temperature | -40 to +125 | ℃ |
| TA | Working temperature | -40 to +85 | ℃ |
| Humidity | Relative humidity | <95 | % |

## 4.3 Power consumption

Table 4-3: Power consumption

VDD=+3.3V；Temp=+25℃

| Operating mode | Current | Remark |
|---|---|---|
| Sleep mode | 412nA | |
| Transmitting mode | 132mA | |
| Receiving mode | 28mA | |


©2018 Guangzhou ZHIYUAN Electronics Co., Ltd.

# 5. RF Parameters

The RF characteristics of AW5161P2 series ZigBee module is listed in Table 5-1.

Table 5-1: RF characteristics

VDD=+3.3V；Temp=+25℃

| Parameter | AW5161P2 series ZigBee module | Remark |
|---|---|---|
| Receiving sensitivity | -95dBm | 1% PER |
| Maximum transmitting power | +20dBm | |
| Maximum receiving power | +10dBm | |
| Output resistance | 50ohm | |


©2018 Guangzhou ZHIYUAN Electronics Co., Ltd.

# 6. Production Guidance

## 6.1 Recommended production reflow temperature curve

The AW5161P2 series ZigBee module is recommended to follow the instructions in Figure 6-1 and the solder manufacturer's guidelines during reflow soldering.

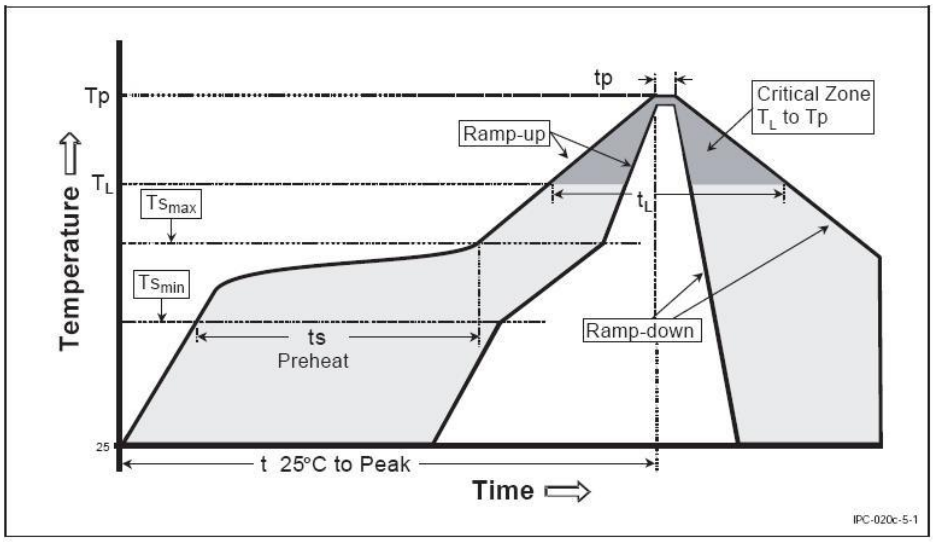


Figure 6-1: Recommended production reflow temperature curve

## 6.2 Recommended production reflow temperature and time comparison table

Figure 6-1 lists detailed temperature and time comparison of AW5161P2 series ZigBee module in the reflow soldering.

Table 6-1: Recommended production reflow temperature and time comparison table

| Profile Feature | Sn-Pb Assembly | Pb-Free Assembly |
|---|---|---|
| Solder Paste | Sn63/Pb37 | Sn96.5/Ag3/Cu0.5 |
| Preheat Temperature min (Tsmin) | 100℃ | 150℃ |
| Preheat Temperature max (Tsmax) | 150℃ | 200℃ |
| Preheat Time (Tsmin to Tsmax) (ts) | 60-120 sec | 60-120 sec |
| Average ramp-up rate (Tsmax to Tp) | 3℃/second max | 3℃/ second max |
| Liquidous Temperature (TL) | 183℃ | 217℃ |
| Time (tL) Maintained Above (TL) | 60-90 sec | 30-90 sec |
| Peak temperature (Tp) | 220-235℃ | 230-245℃ |
| Average ramp-down rate (Tp toTsmax) | 6℃/ second max | 6℃/ second max |
| Time 25℃ to peak temperature | 6 minutes max | 8 minutes max |


©2018 Guangzhou ZHIYUAN Electronics Co., Ltd.

# 7. Hardware Design Precautions

## 7.1 Smallest System

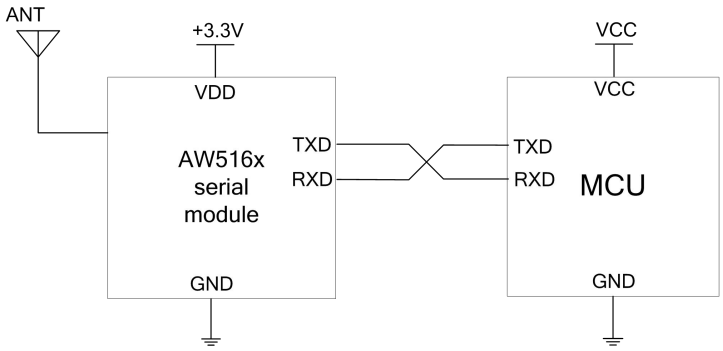


Figure 7-1: Smallest system application

## 7.2 Recommended System

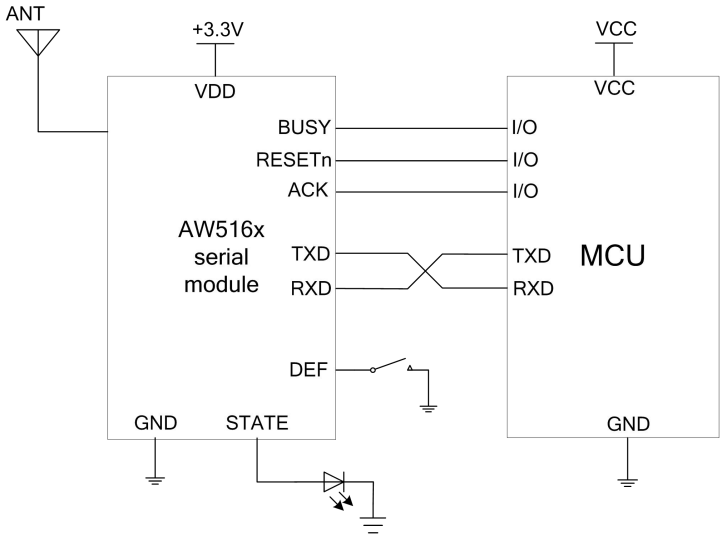


Figure 7-2: Recommended system application


©2018 Guangzhou ZHIYUAN Electronics Co., Ltd.

# 8. FCC Statement

This device complies with part 15 of the FCC Rules. Operation is subject to the following two conditions: (1) This device may not cause harmful interference, and (2) this device must accept any interference received, including interference that may cause undesired operation.

Any Changes or modifications not expressly approved by the party responsible for compliance could void the user's authority to operate the equipment.

Note: This equipment has been tested and found to comply with part 15 of the FCC Rules. These limits are designed to provide reasonable protection against harmful interference in a residential installation. This equipment generates uses and can radiate radio frequency energy and, if not installed and used in accordance with the instructions, may cause harmful interference to radio communications. However, there is no guarantee that interference will not occur in a particular installation. If this equipment does cause harmful interference to radio or television reception, which can be determined by turning the equipment off and on, the user is encouraged to try to correct the interference by one or more of the following measures:

-Reorient or relocate the receiving antenna.

-Increase the separation between the equipment and receiver.

-Connect the equipment into an outlet on a circuit different from that to which the receiver is connected.

-Consult the dealer or an experienced radio/TV technician for help.

The ZigBee Wireless Transmission Module is designed to comply with the FCC statement. FCC ID is ：2AR25-AW5161P2CF The host system using ZigBee Wireless Transmission Module should have label indicated it contain module's FCC ID：2AR25-AW5161P2CF . This radio module must not installed to colocate and operating simultaneously with other radios in host system additional testing and equipment authorization may be required to operating simultaneously with other radio.

To comply with FCC regulations limiting both maximum RF output power and human exposure to RF radiation, the maximum antenna gain including cable loss in a mobile-only exposure condition must not exceed 5dBi in the 2.4G band. The ZigBee Wireless Transmission Module and its antenna must not be co-located or operating in conjunction with any other transmitter or antenna within a host device.

RF warning for Mobile device:

This equipment complies with FCC radiation exposure limits set forth for an uncontrolled environment. This equipment should be installed and operated with minimum distance 20cm between the radiator & your body.

This device complies with Part 15, Subpart C, Section 15.247 of the FCC Rules.


©2018 Guangzhou ZHIYUAN Electronics Co., Ltd.

# 9. Disclaimer

***About application information***

The application information in this document applies to the R&D of AW5161P2 series ZigBee module. Users shall modify and verify it based on the characteristics of their products before product development.

***Rights to modify this document***

The product text information and related software described in this document are all owned by Guangzhou ZHIYUAN Electronics Co., Ltd. All these property rights are protected by the national law absolutely. Without obtaining the authorization of ZHIYUAN Electronics, other companies, organizations, agencies and individuals shall not illegally copy and use the information, or else will be subject to the severe sanctions from national laws. ZHIYUAN Electronics reserves the right to modify this document at any time without any notice.

If you want to know our product and relevant information, please contact us promptly.


©2018 Guangzhou ZHIYUAN Electronics Co., Ltd.

# Sales Information


## Guangzhou ZHIYUAN Electronics Stock Co., Ltd.

Address: Floor 2, Building No.7, Huangzhou Industrial Estate, Chebei Road, Tianhe District, Guangzhou City, China

Zip Code: 510660

Website: www.zlg.com

**Nationwide service hotline：400-888-4005**


**Nationwide service hotline：400-888-4005**

### Sales and service network:

**Guangzhou Sales Office**

Floor 2, Building No.7, Huangzhou Industrial Estate, Chebei Road, Tianhe District, Guangzhou City

TEL: (020)28872342 22644261

**Shanghai Branch- Shanghai**

Room 12E, Jingcheng Building (E), No.668 Beijing Road (E), Shanghai City.

TEL: (021) 53865521 53083451

**Beijing Branch**

Floor 19, Haojing Building A, No.108 Zhichun Road, Haidian District, Beijing City

TEL: (010)62536178 62635573

**Shanghai Branch - Nanjing**

Room 1501, Pearl River Building, No.280 Pearl River Road, Nanjing City.

TEL: (025) 68123923 68123920

**Shenzhen Branch**

Room 1203, Floor 12, Electronics Building, No.2072 Shennan Road (M), Futian District, Shenzhen City

TEL: (0755)83640169 83783155

**Shanghai Branch - Hangzhou**

Room 502, Jiangnan Electronics Building, No.217 Tianmushan Road, Hangzhou City.

TEL: (0571)89719491 89719493

**Wuhan Branch**

Room 12128, No.158 Luoyu Road, Guangbu Village, Hongshan District, Wuhan City.

TEL: (027) 87168497 87168397

**Chongqing Branch**

Room 2705, Atlantic International Building (SEG Electronics Market ), Shiqiaopu Science and Technology Park Road I, Chongqing City

TEL: (023)68796438 68797619

**Chengdu Branch**

Room 403, Digital Technology Building, No.1 Yihuan Road, South 2nd section, Chengdu City

TEL: (028) 85439836 85432683

**Xi'an Office**

Room 1201, Pacific Building, No.54 Changan Road (N), Xi'an City

TEL: (029)87881295 87881296

**Please contact us with the above information. Thank you for your attention to our products!**


©2018 Guangzhou ZHIYUAN Electronics Co., Ltd.