FCC Part 15E Test Report

FCC ID: 2AR2B-DVLCT

Product Name:	Full-HD digital video transmission system
Trademark:	N/A
Model Name :	DVLC T
Prepared For : Address :	WUXI R2TECK.CO., LTD RM307, BUILDING C OF CETUS, NO 111 LINGHU AVE., NEW DIST., WUXI, JIANGSU, CHINA
Prepared By : Address :	Shenzhen BCTC Testing Co., Ltd. BCTC Building & 1-2F, East of B Building, Pengzhou Industrial, Fuyuan 1st Road, Qiaotou Community, Fuyong Street, Bao'an District, Shenzhen, China
Test Date:	Nov. 14, 2018 – Dec. 18, 2018
Date of Report :	Dec. 18, 2018
Report No.:	BCTC-FY181106411E

TEST RESULT CERTIFICATION

Applicant's name..... :	WUXI R2TECK.CO., LTD
Address..... :	RM307, BUILDING C OF CETUS, NO 111 LINGHU AVE., NEW DIST., WUXI, JIANGSU, CHINA
Manufacture's Name..... :	WUXI R2TECK.CO., LTD
Address..... :	RM307, BUILDING C OF CETUS, NO 111 LINGHU AVE., NEW DIST., WUXI, JIANGSU, CHINA
Product description	
Product name.....:	Full-HD digital video transmission system
Trademark.....:	N/A
Model and/or type reference :	DVLC T
Standards :	FCC Part15 15.407 ANSI C63.10-2013

This device described above has been tested by BCTC, and the test results show that the equipment under test (EUT) is in compliance with the FCC requirements. And it is applicable only to the tested sample identified in the report.

This report shall not be reproduced except in full, without the written approval of BCTC, this document may be altered or revised by BCTC, personal only, and shall be noted in the revision of the document.

Prepared by(Engineer):	Amou Zhang	Amou Zhang
Reviewer(Supervisor):	Eric Yang	Eric Yang
Approved(Manager):	Carson Zhang	Carson Zhang

倍测检测 BCTC APPROVED SHENZHEN BCTC TESTING CO., LTD

Table of Contents

	Page
1 . SUMMARY OF TEST RESULTS	**6**
1.1 TEST FACILITY	7
1.2 MEASUREMENT UNCERTAINTY	7
3 . EMC EMISSION TEST	**12**
3.1 CONDUCTED EMISSION MEASUREMENT	12
3.1.1 POWER LINE CONDUCTED EMISSION LIMITS	12
3.1.2 TEST PROCEDURE	13
3.1.3 DEVIATION FROM TEST STANDARD	13
3.1.4 TEST SETUP	13
3.1.5 EUT OPERATING CONDITIONS	13
3.2 RADIATED EMISSION MEASUREMENT	14
3.2.1 APPLICABLE STANDARD	14
3.2.2 CONFORMANCE LIMIT	14
3.2.3 MEASURING INSTRUMENTS	14
3.2.4 TEST CONFIGURATION	15
3.2.5 TEST PROCEDURE	16
3.2.6 TEST RESULTS (9KHZ – 30 MHZ)	17
3.2.7 TEST RESULTS (30MHZ – 1GHZ)	18
3.2.8 TEST RESULTS (ABOVE 1GHZ)	20
4 . POWER SPECTRAL DENSITY TEST	**21**
4.1 APPLIED PROCEDURES / LIMIT	21
4.2 TEST PROCEDURE	22
4.3 DEVIATION FROM STANDARD	22
4.4 TEST SETUP	22
4.5 EUT OPERATION CONDITIONS	22
4.6 TEST RESULTS	23
5 . 26DB & 99% EMISSION BANDWIDTH	**24**
5.1 APPLIED PROCEDURES / LIMIT	24
5.2 TEST PROCEDURE	24
5.3 EUT OPERATION CONDITIONS	25
5.4 TEST RESULTS	26
6 . MAXIMUM CONDUCTED OUTPUT POWER	**27**
6.1 PPLIED PROCEDURES / LIMIT	27
6.2 TEST PROCEDURE	27
6.3 DEVIATION FROM STANDARD	27

Table of Contents

	Page
6.4 TEST SETUP	27
6.5 EUT OPERATION CONDITIONS	28
6.6 TEST RESULTS	28
7 . OUT OF BAND EMISSIONS	29
7.1 APPLICABLE STANDARD	29
7.2 TEST PROCEDURE	29
7.3 DEVIATION FROM STANDARD	29
7.4 TEST SETUP	29
7.5 EUT OPERATION CONDITIONS	29
7.6 TEST RESULTS	30
9.SPURIOUS RF CONDUCTED EMISSIONS	31
9.1CONFORMANCE LIMIT	31
9.2MEASURING INSTRUMENTS	31
9.3TEST SETUP	31
9.4TEST PROCEDURE	31
9.5TEST RESULTS	31
10. FREQUENCY STABILITY MEASUREMENT	34
10.1 LIMIT	34
10.2 TEST PROCEDURES	34
10.3 TEST SETUP LAYOUT	34
10.4 EUT OPERATION DURING TEST	34
10.5 TEST RESULTS	35
11. ANTENNA REQUIREMENT	36
11.1 STANDARD REQUIREMENT	36
11.2 EUT ANTENNA	36
12. EUT TEST PHOTO	37
13. EUT PHOTO	39

Revision History

Report No.	Version	Description	Issued Date
BCTC-FY181106411E	Rev.01	Initial issue of report	Dec. 18, 2018

1. SUMMARY OF TEST RESULTS

Test procedures according to the technical standards:

FCC Part15 (15.407) , Subpart E			
Standard Section	Test Item	Judgment	Remark
15.209(a), 15.407 (b)(1) 15.407 (b)(6)	Spurious Radiated Emissions	PASS	
15.407 (a)(1) 15.1049	26 dB and 99% Emission Bandwidth	PASS	
15.407 (a)(1) 15.407 (a)(3)	Maximum Conducted Output Power	PASS	
2.1051, 15.407(b)(1)	Band Edge	PASS	
15.407 (a)(1)	Power Spectral Density	PASS	
2.1051, 15.407(b)	Spurious Emissions at Antenna Terminals	PASS	
15.203	Antenna Requirement	PASS	

NOTE:

(1)” N/A” denotes test is not applicable in this Test Report

1.1 TEST FACILITY

Shenzhen BCTC Testing Co., Ltd.
Add. : BCTC Building & 1-2F, East of B Building, Pengzhou Industrial, Fuyuan 1st Road, Qiaotou Community, Fuyong Street, Bao'an District, Shenzhen, China
FCC Test Firm Registration Number: 712850
IC Registered No.: 23583

1.2 MEASUREMENT UNCERTAINTY

The reported uncertainty of measurement **y ± U**，where expended uncertainty **U** is based on a standard uncertainty multiplied by a coverage factor of **k=2**，providing a level of confidence of approximately **95** %。

No.	Item	Uncertainty
1	3m camber Radiated spurious emission(30MHz-1GHz)	U=4.3dB
2	3m chamber Radiated spurious emission(1GHz-18GHz)	U=4.5dB
3	3m chamber Radiated spurious emission(18GHz-40GHz)	U=3.34dB
4	Conducted Adjacent channel power	U=1.38dB
5	Conducted output power uncertainty Above 1G	U=1.576dB
6	Conducted output power uncertainty below 1G	U=1.28dB
7	humidity uncertainty	U=5.3%
8	Temperature uncertainty	U=0.59℃
9	Radiated disturbance(30MHz-1000MHz)	U=4.8dB
10	Radiated disturbance(1GHz-6GHz)	U=4.9dB
11	Radiated disturbance(1GHz-18GHz)	U=5.0dB

2. GENERAL INFORMATION

2.1 GENERAL DESCRIPTION OF EUT

Equipment	Full-HD digital video transmission system	
Trade Name	N/A	
Model Name	DVLC T	
Model Difference	N/A	
Product Description	5.2GHz	5200MHz
	Data Rate	6Mbps;
	Modulation	OFDM
	Number of Channels	1channels
	Antenna Type	Antenna A/B: External antenna
	Based on the application, features, or specification exhibited in User's Manual, the EUT is considered as an ITE/Computing Device. More details of EUT technical specification, please refer to the User's Manual.	
Channel List	Please refer to the Note 2.	
Power	DC 12V	
Connecting I/O Port(s)	Please refer to the User's Manual	

Note:

1. For a more detailed features description, please refer to the manufacturer's specifications or the User's Manual.
2. Frequency and Channel list for 5200MHz:

Carrier Frequency Channel							
Channel	Frequency (MHz)	Channel	Frequency (MHz)	Channel	Frequency (MHz)	Channel	Frequency (MHz)
1	5200	-	-	-	-	-	-

The EUT has two types of antenna. The wireless module support MIMO
Tx Antenna

Antenna	Antenna Type	Antenna Gain(dBi)
Antenna A	External antenna	2
Antenna B	External antenna	2

Antenna A gain: 2dBi, Antenna B gain: 2dBi,
For MIMO mode for 5.2GHz, Directional gain=2+10log(2)=5.01dbi

2.2 DESCRIPTION OF TEST MODES

Pretest Mode	Description
Mode 1	TX 5200 MHz
Mode 2	Link Mode

Conducted Emission	
Final Test Mode	Description
Mode 2	Link Mode

For Radiated Emission	
Final Test Mode	Description
Mode 1	TX 5200 MHz
Mode 2	Link Mode

Note:

(1) The measurements are performed at all Bit Rate of Transmitter, the worst data was reported.

2.3 BLOCK DIGRAM SHOWING THE CONFIGURATION OF SYSTEM TESTED

Radiated Spurious Emission

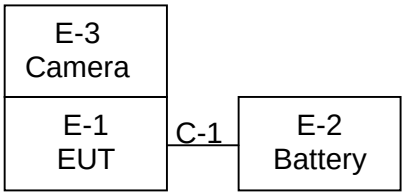

2.4 DESCRIPTION OF SUPPORT UNITS(CONDUCTED MODE)

The EUT has been tested as an independent unit together with other necessary accessories or support units. The following support units or accessories were used to form a representative test configuration during the tests.

Item	Equipment	Mfr/Brand	Model/Type No.	Series No.	Note
E-1	Full-HD digital video transmission system	N/A	DVLC T	N/A	EUT
E-2	Battery	N/A	BCTC001	N/A	Auxiliary
E-3	camera	N/A	CA-01	N/A	Auxiliary

Item	Shielded Type	Ferrite Core	Length	Note
C-1	NO	NO	1.0M	DC cable unshielded

Note:

(1) The support equipment was authorized by Declaration of Confirmation.
(2) For detachable type I/O cable should be specified the length in cm in『Length』column.

2.5 EQUIPMENTS LIST FOR ALL TEST ITEMS

Radiation Test equipment

Item	Equipment	Manufacturer	Type No.	Serial No.	Last calibration	Calibrated until
1	Spectrum Analyzer (9kHz-26.5GHz)	Agilent	E4407B	MY45109572	2018.06.20	2019.06.20
2	Test Receiver (9kHz-7GHz)	R&S	ESR7	101154	2018.06.20	2019.06.20
3	Bilog Antenna (30MHz-3GHz)	SCHWARZBECK	VULB9163	VULB9163-942	2018.06.23	2019.06.23
4	Horn Antenna (1GHz-18GHz)	SCHWARZBECK	BBHA9120D	1541	2018.06.23	2021.06.22
5	Horn Antenna (18GHz-40GHz)	SCHWARZBECK	BBHA9170	822	2018.08.06	2019.08.06
6	Amplifier (9KHz-6GHz)	SCHWARZBECK	BBV9744	9744-0037	2018.06.20	2019.06.20
7	Amplifier (0.5GHz-18GHz)	SCHWARZBECK	BBV9718	9718-309	2018.06.20	2019.06.20
8	Amplifier (18GHz-40GHz)	MITEQ	TTA1840-35-HG	2034381	2018.08.06	2019.08.06
9	Loop Antenna (9KHz-30MHz)	SCHWARZBECK	FMZB1519B	014	2018.06.23	2019.06.23
10	RF cables1 (9kHz-30MHz)	Huber+Suhnar	9kHz-30MHz	B1702988-0008	2018.02.12	2019.02.12
11	RF cables2 (30MHz-1GHz)	Huber+Suhnar	30MHz-1GHz	1486150	2018.03.27	2019.03.27
12	RF cables3 (1GHz-40GHz)	Huber+Suhnar	1GHz-40GHz	1607106	2018.06.19	2019.06.19
13	Power Metter	Keysight	E4419	\	2018.04.15	2019.04.15
14	Power Sensor (AV)	Keysight	E9 300A	\	2018.04.15	2019.04.15
15	Signal Analyzer 20kHz-26.5GHz	KEYSIGHT	N9020A	MY49100060	2018.08.14	2019.08.13
16	Test Receiver 9kHz-40GHz	R&S	FSP40	100550	2018.06.13	2019.06.12
17	D.C. Power Supply	LongWei	TPR-6405D	\	\	\
18	Software	Frad	EZ-EMC	FA-03A2 RE	\	\

Conduction Test equipment

Item	Equipment	Manufacturer	Type No.	Serial No.	Last calibration	Calibrated until
1	Test Receiver	R&S	ESR3	102075	2018.06.20	2019.06.20
2	LISN	SCHWARZBECK	NSLK8127	8127739	2018.06.19	2019.06.19
3	LISN	R&S	ENV216	101375	2018.06.20	2019.06.20
4	RF cables	Huber+Suhnar	9kHz-30MHz	B1702988-0008	2018.02.12	2019.02.12
5	Software	Frad	EZ-EMC	EMC-CON 3A1	\	\

3. EMC EMISSION TEST

3.1 CONDUCTED EMISSION MEASUREMENT

3.1.1 POWER LINE CONDUCTED EMISSION Limits (Frequency Range 150KHz-30MHz)

FREQUENCY (MHz)	Class B (dBuV)		Standard
	Quasi-peak	Average	
0.15 -0.5	66 - 56 *	56 - 46 *	CISPR
0.50 -5.0	56.00	46.00	CISPR
5.0 -30.0	60.00	50.00	CISPR

0.15 -0.5	66 - 56 *	56 - 46 *	FCC/ RSS-247
0.50 -5.0	56.00	46.00	FCC/ RSS-247
5.0 -30.0	60.00	50.00	FCC/ RSS-247

Note:

(1) The tighter limit applies at the band edges.

(2) The limit of " * " marked band means the limitation decreases linearly with the logarithm of the frequency in the range.

The following table is the setting of the receiver

Receiver Parameters	Setting
Attenuation	10 dB
Start Frequency	0.15 MHz
Stop Frequency	30 MHz
IF Bandwidth	9 kHz

3.1.2 TEST PROCEDURE

a. The EUT was placed 0.8 meters from the horizontal ground plane with EUT being connected to the power mains through a line impedance stabilization network (LISN). All other support equipments powered from additional LISN(s). The LISN provide 50 Ohm/ 50uH of coupling impedance for the measuring instrument.
b. Interconnecting cables that hang closer than 40 cm to the ground plane shall be folded back and forth in the center forming a bundle 30 to 40 cm long.
c. I/O cables that are not connected to a peripheral shall be bundled in the center. The end of the cable may be terminated, if required, using the correct terminating impedance. The overall length shall not exceed 1 m.
d. LISN at least 80 cm from nearest part of EUT chassis.
e. For the actual test configuration, please refer to the related Item –EUT Test Photos.

3.1.3 DEVIATION FROM TEST STANDARD

No deviation

3.1.4 TEST SETUP

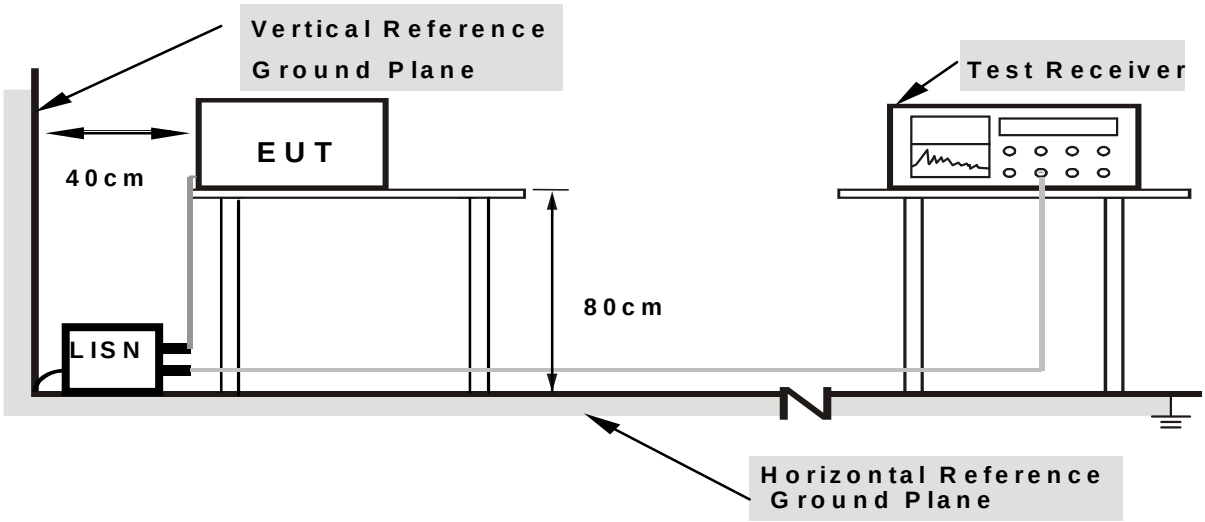

Note: 1.Support units were connected to second LISN.
2.Both of LISNs (AMN) are 80 cm from EUT and at least 80 from other units and other metal planes

3.1.5 EUT OPERATING CONDITIONS

NOTE: This EUT is powered by the battery only, this test item is not applicable.

3.2 RADIATED EMISSION MEASUREMENT

3.2.1 APPLICABLE STANDARD

According to FCC Part 15.407(d) and 15.209

3.2.2 CONFORMANCE LIMIT

According to FCC Part 15.407(b)(7): radiated emissions which fall in the restricted bands, as defined in §15.205(a), must also comply with the radiated emission limits specified in §15.209(a) (see §15.205(c)).
According to FCC Part15.205, Restricted bands

MHz	MHz	MHz	GHz
0.090-0.110	16.42-16.423	399.9-410	4.5-5.15
10.495-0.505	16.69475-16.69525	608-614	5.35-5.46
2.1735-2.1905	16.80425-16.80475	960-1240	7.25-7.75
4.125-4.128	25.5-25.67	1300-1427	8.025-8.5
4.17725-4.17775	37.5-38.25	1435-1626.5	9.0-9.2
4.20725-4.20775	73-74.6	1645.5-1646.5	9.3-9.5
6.215-6.218	74.8-75.2	1660-1710	10.6-12.7
6.26775-6.26825	123-138	2200-2300	14.47-14.5
8.291-8.294	149.9-150.05	2310-2390	15.35-16.2
8.362-8.366	156.52475-156.52525	2483.5-2500	17.7-21.4
8.37625-8.38675	156.7-156.9	2690-2900	22.01-23.12
8.41425-8.41475	162.0125-167.17	3260-3267	23.6-24.0
12.29-12.293	167.72-173.2	3332-3339	31.2-31.8
12.51975-12.52025	240-285	3345.8-3358	36.43-36.5
12.57675-12.57725	322-335.4	3600-4400	(2)
13.36-13.41			

20dBc in any 100 kHz bandwidth outside the operating frequency band. In case the emission fall within the restricted band specified on 15.205(a), then the 15.209(a) limit in the table below has to be followed.

Restricted Frequency(MHz)	Field Strength (μV/m)	Field Strength (dBμV/m)	Measurement Distance
0.009~0.490	2400/F(KHz)	20 log (uV/m)	300
0.490~1.705	2400/F(KHz)	20 log (uV/m)	30
1.705~30.0	30	29.5	30
30-88	100	40	3
88-216	150	43.5	3
216-960	200	46	3
Above 960	500	54	3

Limits of Radiated Emission Measurement(Above 1000MHz)

Frequency(MHz)	Class B (dBuV/m) (at 3M)	
	PEAK	AVERAGE
Above 1000	74	54

Remark :1. Emission level in dBuV/m=20 log (uV/m)
2. Measurement was performed at an antenna to the closed point of EUT distance of meters.
3. Distance extrapolation factor =40log(Specific distance/ test distance)(dB);
Limit line=Specific limits(dBuV) + distance extrapolation factor.

3.2.3 MEASURING INSTRUMENTS

The Measuring equipment is listed in the section 6.3 of this test report.

3.2.4 TEST CONFIGURATION

(a) For radiated emissions below 30MHz

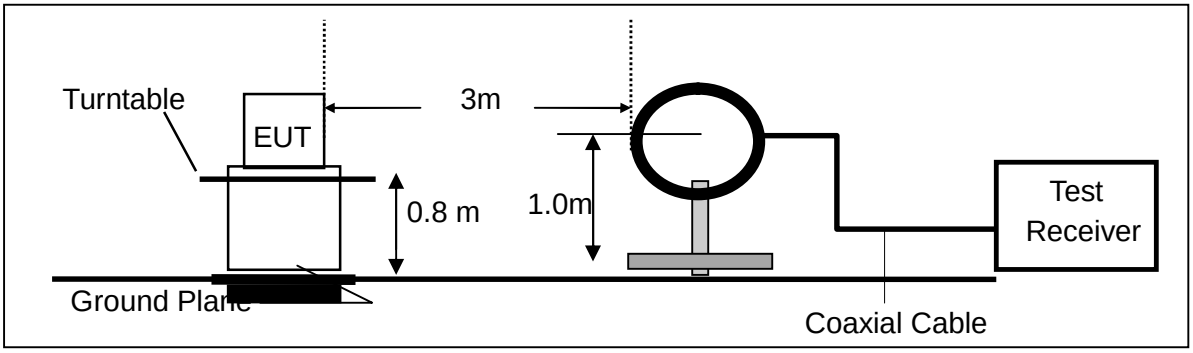

(b) For radiated emissions from 30MHz to 1000MHz

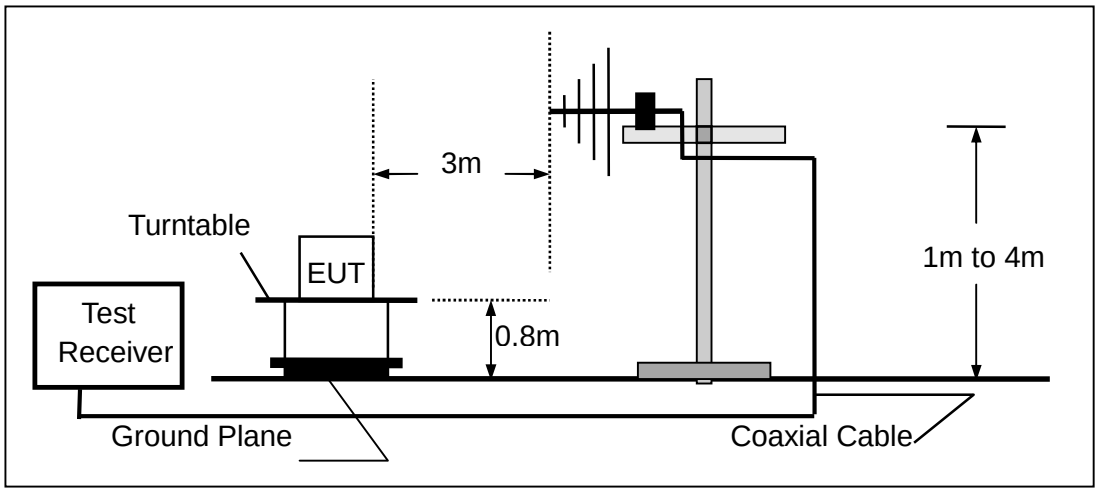

(c) For radiated emissions above 1000MHz

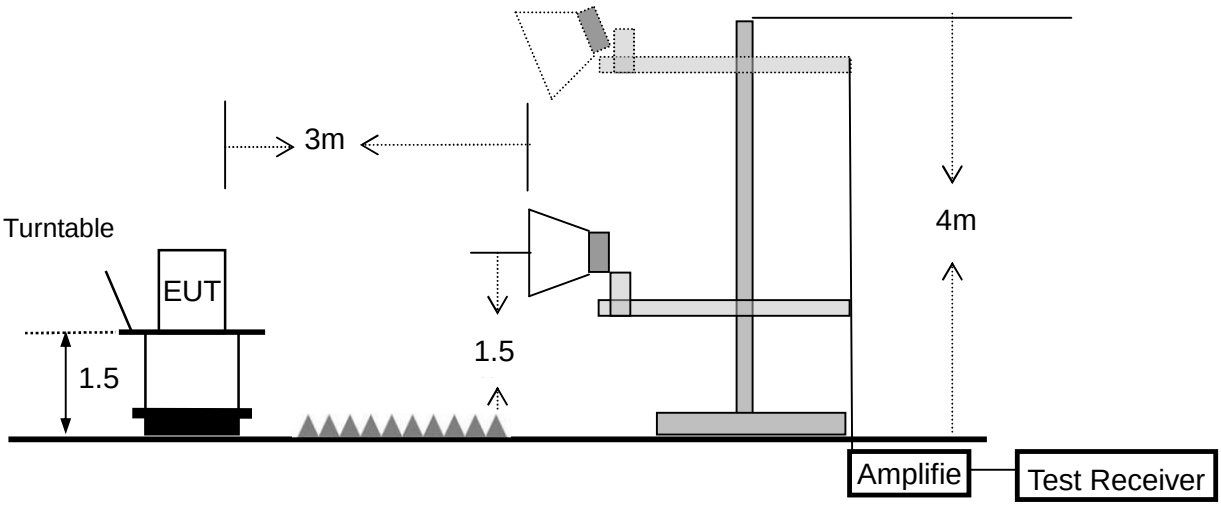

3.2.5 TEST PROCEDURE

The test site semi-anechoic chamber has met the requirement of NSA tolerance 4 dB according to the standards: ANSI C63.10-2013. The test distance is 3m.The setup is according to the requirements in Section 13.1.4.1 of ANSI C63.10-2013 and CAN/CSA-CEI/IEC CISPR 22.
This test is required for any spurious emission that falls in a Restricted Band, as defined in Section 15.205.
It must be performed with the highest gain of each type of antenna proposed for use with the EUT.
Use the following spectrum analyzer settings:

Spectrum Parameter	Setting
Attenuation	Auto
Start Frequency	1000 MHz
Stop Frequency	10th carrier harmonic
RB / VB (emission in restricted band)	1 MHz / 1 MHz for Peak, 1 MHz / 10Hz for Average

Receiver Parameter	Setting
Attenuation	Auto
Start ~ Stop Frequency	9kHz~150kHz / RB 200Hz for QP
Start ~ Stop Frequency	150kHz~30MHz / RB 9kHz for QP
Start ~ Stop Frequency	30MHz~1000MHz / RB 120kHz for QP

a. The measuring distance of at 3 m shall be used for measurements at frequency up to 1GHz. For frequencies above 1GHz, any suitable measuring distance may be used.
b. The EUT was placed on the top of a rotating table 0.8 m for below 1GHz and 1.5m for above 1GHz the ground at a 3 meter. The table was rotated 360 degrees to determine the position of the highest radiation.
c. The height of the equipment or of the substitution antenna shall be 0.8 m for below 1GHz and 1.5m for above 1GHz; the height of the test antenna shall vary between 1 m to 4 m. Both horizontal and vertical polarizations of the antenna are set to make the measurement.
d. The initial step in collecting conducted emission data is a spectrum analyzer peak detector mode pre-scanning the measurement frequency range. Significant peaks are then marked and then Quasi Peak detector mode re-measured.
e. If the Peak Mode measured value compliance with and lower than Quasi Peak Mode Limit, the EUT shall be deemed to meet QP Limits and then no additional QP Mode measurement performed.
f. For the actual test configuration, please refer to the related Item –EUT Test Photos.

Note:

Both horizontal and vertical antenna polarities were tested
and performed pretest to three orthogonal axis. The worst case emissions were reported

During the radiated emission test, the Spectrum Analyzer was set with the following configurations:

Frequency Band (MHz)	Function	Resolution bandwidth	Video Bandwidth
30 to 1000	QP	120 kHz	300 kHz
Above 1000	Peak	1 MHz	1 MHz
	Average	1 MHz	10 Hz

Note: for the frequency ranges below 30 MHz, a narrower RBW is used for these ranges but the measured value should add a RBW correction factor (RBWCF) where RBWCF [dB] =10*lg(100 [kHz]/narrower RBW [kHz]). , the narrower RBW is 1 kHz and RBWCF is 20 dB for the frequency 9 kHz to 150 kHz, and the narrower RBW is 10 kHz and RBWCF is 10 dB for the frequency 150 kHz to 30 MHz.

3.2.6 TEST RESULTS (9KHZ – 30 MHZ)

Temperature:	26℃	Relative Humidtity:	54%
Pressure:	101kPa	Test Voltage :	DC 12V
Test Mode :	Mode 2	Polarization :	--

Freq.	Reading	Limit	Margin	State
(MHz)	(dBuV/m)	(dBuV/m)	(dB)	P/F
--	--	--	--	N/A
--	--	--	--	N/A

The amplitude of spurious emissions which are attenuated by more than 20dB below the permissible value has no need to be reported.
Distance extrapolation factor =40 log (specific distance/test distance)(dB);
Limit line = specific limits(dBuv) + distance extrapolation factor.

3.2.7 TEST RESULTS (30MHZ – 1GHZ)

Temperature：	26℃	Relative Humidity：	54%
Pressure：	101 kPa	Polarization :	Horizontal
Test Voltage ：	DC 12V		
Test Mode ：	Mode 2 (5.2G)		

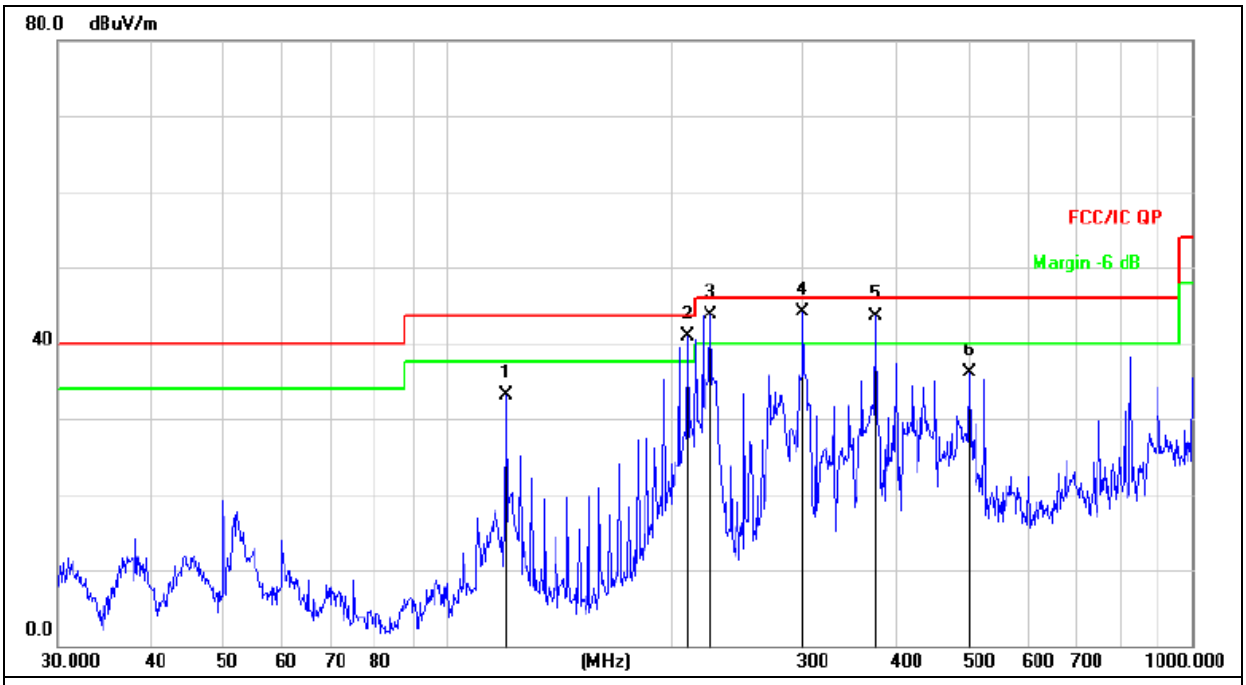

Remark:
Factor = Antenna Factor + Cable Loss – Pre-amplifier.

No.	Mk.	Freq.	Reading Level	Correct Factor	Measure-ment	Limit	Over	
		MHz	dBuV	dB	dBuV/m	dB/m	dB	Detector
1		119.8556	50.73	-17.56	33.17	43.50	-10.33	QP
2	!	210.0482	57.01	-16.07	40.94	43.50	-2.56	QP
3	!	225.3080	59.34	-15.72	43.62	46.00	-2.38	QP
4	*	300.3672	57.75	-13.59	44.16	46.00	-1.84	QP
5	!	375.9385	55.23	-11.64	43.59	46.00	-2.41	QP
6		501.1790	44.96	-8.91	36.05	46.00	-9.95	QP

Temperature：	26℃	Relative Humidity：	54%
Pressure：	101kPa	Polarization：	Vertical
Test Voltage ：	DC 12V		
Test Mode ：	Mode 2 (5.2G)		

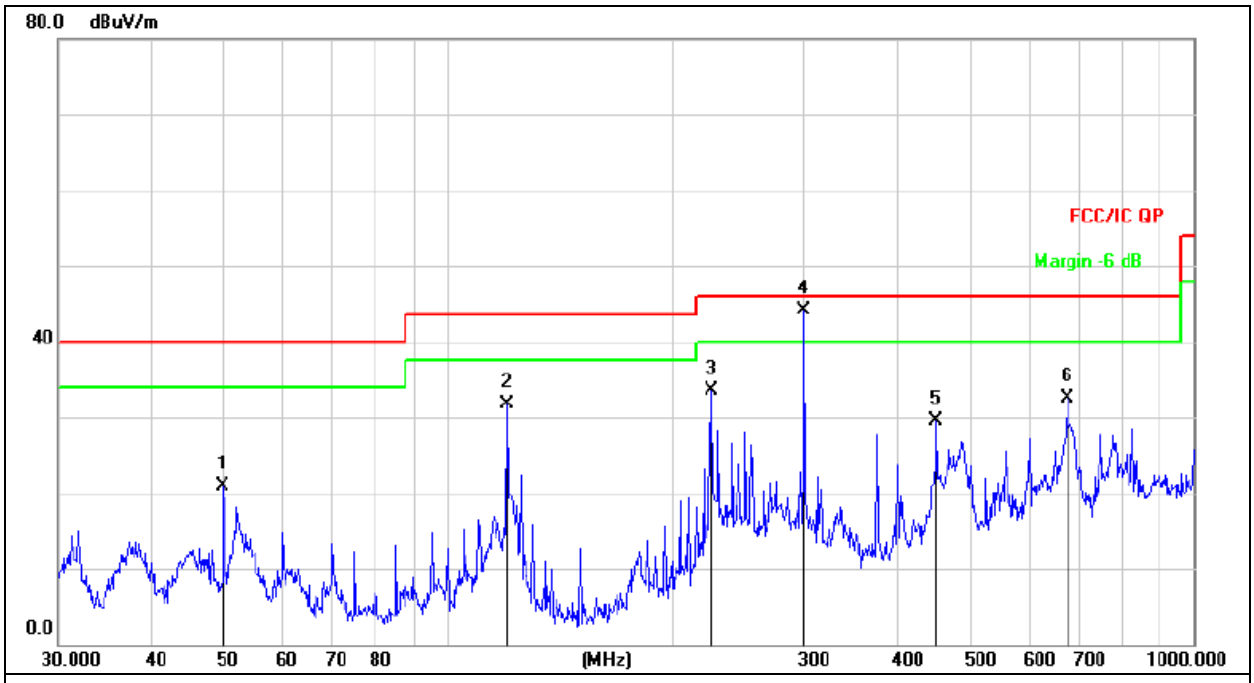

Remark:
Factor = Antenna Factor + Cable Loss – Pre-amplifier.

No.	Mk.	Freq.	Reading Level	Correct Factor	Measure-ment	Limit	Over	
		MHz	dBuV	dB	dBuV/m	dB/m	dB	Detector
1		49.8814	35.77	-14.86	20.91	40.00	-19.09	QP
2		119.8556	49.30	-17.56	31.74	43.50	-11.76	QP
3		225.3080	49.18	-15.72	33.46	46.00	-12.54	QP
4	*	300.3672	57.65	-13.59	44.06	46.00	-1.94	QP
5		451.1350	39.50	-9.95	29.55	46.00	-16.45	QP
6		675.2080	38.47	-5.97	32.50	46.00	-13.50	QP

3.2.8 TEST RESULTS (ABOVE 1GHZ)

Polar	Frequency	Meter Reading	Cable loss	Antenna Factor	Preamp Factor	Emission Level	Limits	Margin	Detector Type
(H/V)	(MHz)	(dBuV)	(dB)	dB/m	(dB)	(dBuV/m)	(dBuV/m)	(dB)	
(5200 MHz)-Above 1G									
Vertical	10401.421	59.63	8.47	37.88	44.51	61.47	74.00	-12.53	Pk
Vertical	10401.421	42.72	8.47	37.88	44.51	44.56	54.00	-9.44	AV
Vertical	15600.216	56.54	10.12	38.8	44.10	61.36	74.00	-12.64	Pk
Vertical	15600.216	36.61	10.12	38.8	42.70	42.83	54.00	-11.17	AV
Horizontal	10400.113	58.89	8.47	38.64	44.50	61.5	74.00	-12.5	Pk
Horizontal	10400.113	42.13	8.47	38.64	44.50	44.74	54.00	-9.26	AV
Horizontal	15600.185	59.65	10.12	38.38	44.10	64.05	74.00	-9.95	Pk
Horizontal	15600.185	38.73	10.12	38.38	44.10	43.13	54.00	-10.87	AV

Note: PK value is lower than the Average value limit, So average didn't record.

The amplitude of spurious emissions that are attenuated by more than 20dB below the permissible value

has no need to be reported.

Emission level (dBuV/m) = 20 log Emission level (uV/m).

Corrected Reading: Antenna Factor + Cable Loss + Read Level - Preamp Factor = Level.

4. POWER SPECTRAL DENSITY TEST

4.1 APPLIED PROCEDURES / LIMIT

Section 15.407(a) Power limits:

(1) For the band 5.15-5.25 GHz.
(ii) For an indoor access point operating in the band 5.15-5.25 GHz, the maximum conducted output power over the frequency band of operation shall not exceed 1 W provided the maximum antenna gain does not exceed 6 dBi. In addition, the maximum power spectral density shall not exceed 17 dBm in any 1 megahertz band. If transmitting antennas of directional gain greater than 6 dBi are used, both the maximum conducted output power and the maximum power spectral density shall be reduced by the amount in dB that the directional gain of the antenna exceeds 6 dBi.

(2) For the 5.25-5.35 GHz and 5.47-5.725 GHz bands, the maximum conducted output power over the frequency bands of operation shall not exceed the lesser of 250 mW or 11 dBm + 10 log B, where B is the 26 dB emission bandwidth in megahertz. In addition, the maximum power spectral density shall not exceed 11 dBm in any 1 megahertz band. If transmitting antennas of directional gain greater than 6 dBi are used, both the maximum conducted output power and the maximum power spectral density shall be reduced by the amount in dB that the directional gain of the antenna exceeds 6 dBi.

（3）For the band 5.725-5.85 GHz, the maximum conducted output power over the frequency band of operation shall not exceed 1 W. In addition, the maximum power spectral density shall not exceed 30 dBm in any 500-kHz band. If transmitting antennas of directional gain greater than 6 dBi are used, both the maximum conducted output power and the maximum power spectral density shall be reduced by the amount in dB that the directional gain of the antenna exceeds 6 dBi. However, fixed point-to-point U-NII devices operating in this band may employ transmitting antennas with directional gain greater than 6 dBi without any corresponding reduction in transmitter conducted power. Fixed, point-to-point operations exclude the use of point-to-multipoint systems, omnidirectional applications, and multiple collocated transmitters transmitting the same information. The operator of the U-NII device, or if the equipment is professionally installed, the installer, is responsible for ensuring that systems employing high gain directional antennas are used exclusively for fixed, point-to-point operations.

4.2 TEST PROCEDURE

For devices operating in the bands 5.15-5.25 GHz, 5.25-5.35 GHz, and 5.47-5.725 GHz, the above procedures make use of 1 MHz RBW to satisfy directly the 1 MHz reference bandwidth specified in § 15.407(a)(5). For devices operating in the band 5.725-5.85 GHz, the rules specify a measurement bandwidth of 500 kHz. Many spectrum analyzers do not have 500 kHz RBW, thus a narrower RBW may need to be used. The rules permit the use of a RBWs less than 1 MHz, or 500 kHz, “provided that the measured power is integrated over the full reference bandwidth” to show the total power over the specified measurement bandwidth (i.e., 1 MHz, or 500 kHz). If measurements are performed using a reduced resolution bandwidth (< 1 MHz, or < 500 kHz) and integrated over 1 MHz, or 500 KHz bandwidth, the following adjustments to the procedures apply:

a) Set RBW ≥ 1/T, where T is defined in section II.B.l.a).

b) Set VBW ≥ 3 RBW.

c) If measurement bandwidth of Maximum PSD is specified in 500 kHz, add 10log(500kHz/RBW) to the measured result, whereas RBW (< 500 KHz) is the reduced resolution bandwidth of the spectrum analyzer set during measurement.

d) If measurement bandwidth of Maximum PSD is specified in 1 MHz, add 10log(1MHz/RBW) to the measured result, whereas RBW (< 1 MHz) is the reduced resolution bandwidth of spectrum analyzer set during measurement.

e) Care must be taken to ensure that the measurements are performed during a period of continuous transmission or are corrected upward for duty cycle.

Note: As a practical matter, it is recommended to use reduced RBW of 100 KHz for the sections 5.c) and 5.d) above, since RBW=100 KHZ is available on nearly all spectrum analyzers.

4.3 DEVIATION FROM STANDARD

No deviation.

4.4 TEST SETUP

4.5 EUT OPERATION CONDITIONS

The EUT tested system was configured as the statements of 2.1 Unless otherwise a special operating condition is specified in the follows during the testing.

4.6 TEST RESULTS

Temperature：	26 ℃	Relative Humidity：	54%
Pressure：	101kPa	Test Voltage ：	DC 12V
Test Mode ：	TX Frequency Band I (5.2GHz)		

Antenna A gain: 2dBi, Antenna B gain: 2dBi, Directional gain=[10log(GA+ G B)] dbi =5.01dbi

Mode	Frequency	Measured Power Density (dBm)	Measured Power Density (dBm)	Total power density (dBm)	Limit (dBm)	Result
		Antenna A	Antenna B			
802.11 a	5200 MHz	10.22	10.87	13.57	17	PASS

Note: The wireless module support MIMO.

ANTA (5200 MHz) PSD plot on channel 01

ANTB (5200 MHz) PSD plot on channel 01

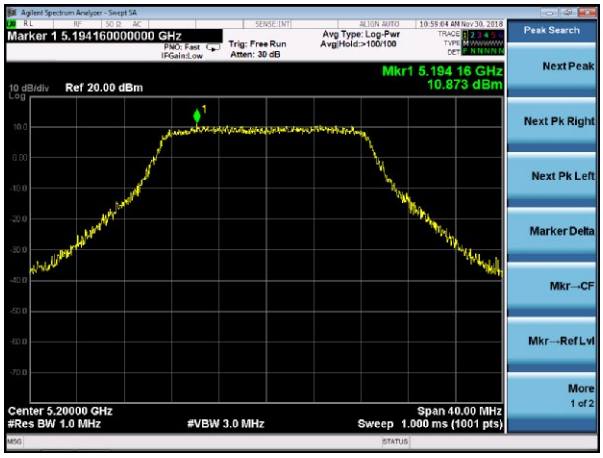

5. 26DB & 99% EMISSION BANDWIDTH

5.1 APPLIED PROCEDURES / LIMIT

The maximum power spectral density is measured as a conducted emission by direct connection of a calibrated test instrument to the equipment under test. If the device cannot be connected directly, alternative techniques acceptable to the Commission may be used. Measurements in the 5.725-5.85 GHz band are made over a reference bandwidth of 500 kHz or the 26 dB emission bandwidth of the device, whichever is less. Measurements in the 5.15-5.25 GHz, 5.25-5.35 GHz, and the 5.47-5.725 GHz bands are made over a bandwidth of 1 MHz or the 26 dB emission bandwidth of the device, whichever is less. A narrower resolution bandwidth can be used, provided that the measured power is integrated over the full reference bandwidth.

5.2 TEST PROCEDURE

a) Set RBW = approximately 1% of the emission bandwidth.

b) Set the VBW > RBW.

c) Detector = Peak.

d) Trace mode = max hold.

e) Measure the maximum width of the emission that is 26 dB down from the maximum of the emission. Compare this with the RBW setting of the analyzer. Readjust RBW and repeat measurement as needed until the RBW/EBW ratio is approximately 1%.

The following procedure shall be used for measuring (99 %) power bandwidth:

1. Set center frequency to the nominal EUT channel center frequency.
2. Set span = 1.5 times to 5.0 times the OBW.
3. Set RBW = 1 % to 5 % of the OBW
4. Set VBW ≥ 3 · RBW
5. Video averaging is not permitted. Where practical, a sample detection and single sweep mode shall be used. Otherwise, peak detection and max hold mode (until the trace stabilizes) shall be used.
6. Use the 99 % power bandwidth function of the instrument (if available).
7. If the instrument does not have a 99 % power bandwidth function, the trace data points are recovered and directly summed in power units. The recovered amplitude data points, beginning at the lowest frequency, are placed in a running sum until 0.5 % of the total is reached; that frequency is recorded as the lower frequency. The process is repeated until 99.5 % of the total is reached; that frequency is recorded as the upper frequency. The 99% occupied bandwidth is the difference between these two frequencies.

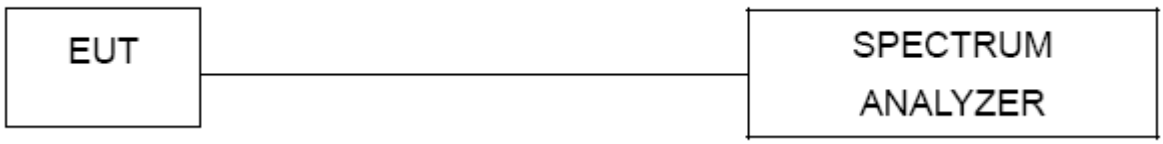

5.3 EUT OPERATION CONDITIONS

The EUT tested system was configured as the statements of 2.4 Unless otherwise a special operating condition is specified in the follows during the testing.

5.4 TEST RESULTS

Temperature：	26 ℃	Relative Humidity：	54%
Pressure：	101kPa	Test Voltage ：	DC 12V
Test Mode ：	TX Frequency Band I (5.2GHz)		

Antenna A gain: 2dBi, Antenna B gain: 2dBi, Directional gain=[10log(GA+ G B)] dbi =5.01dbi

Mode	Channel	Frequency (MHz)	99% bandwidth(MHz)	99% bandwidth(MHz)	26dB bandwidth (MHz)	26dB bandwidth (MHz)	Result
			Antenna A	Antenna B	Antenna A	Antenna B	
5200MHz	CH01	5200	17.79	17.75	22.00	22.22	Pass

Test plot

ANTA (5200MHz) -26dB&99%Bandwidth plot on channel 01

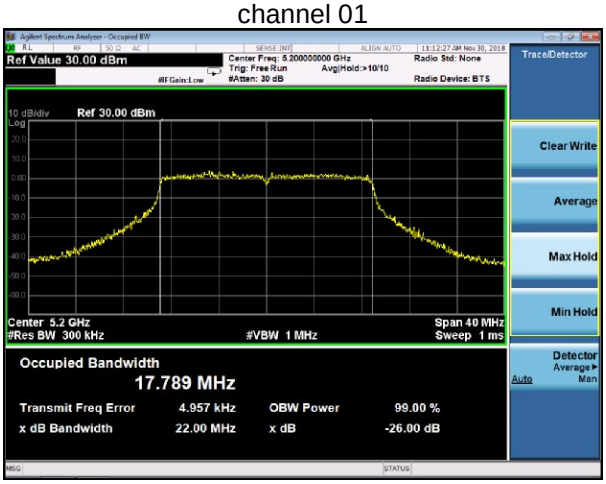

ANTB (5200MHz) -26dB&99%Bandwidth plot on channel 01

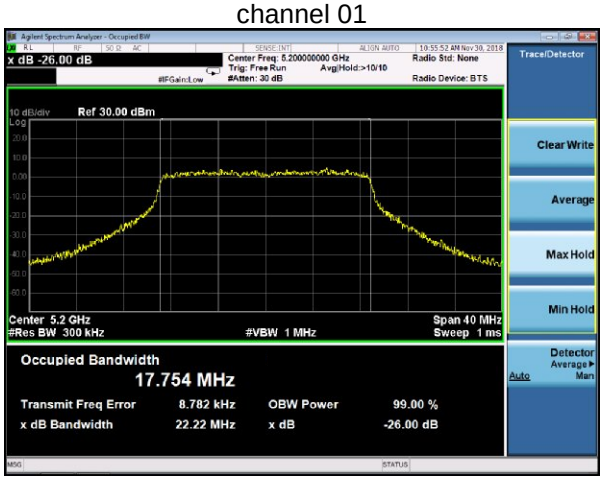

6. MAXIMUM CONDUCTED OUTPUT POWER

6.1 PPLIED PROCEDURES / LIMIT

Section 15.407(a) Power limits:

(1) For the band 5.15-5.25 GHz.
(ii) For an indoor access point operating in the band 5.15-5.25 GHz, the maximum conducted output power over the frequency band of operation shall not exceed 1 W provided the maximum antenna gain does not exceed 6 dBi. In addition, the maximum power spectral density shall not exceed 17 dBm in any 1 megahertz band. If transmitting antennas of directional gain greater than 6 dBi are used, both the maximum conducted output power and the maximum power spectral density shall be reduced by the amount in dB that the directional gain of the antenna exceeds 6 dBi.

(2) For the 5.25-5.35 GHz and 5.47-5.725 GHz bands, the maximum conducted output power over the frequency bands of operation shall not exceed the lesser of 250 mW or 11 dBm + 10 log B, where B is the 26 dB emission bandwidth in megahertz. In addition, the maximum power spectral density shall not exceed 11 dBm in any 1 megahertz band. If transmitting antennas of directional gain greater than 6 dBi are used, both the maximum conducted output power and the maximum power spectral density shall be reduced by the amount in dB that the directional gain of the antenna exceeds 6 dBi.

（3）For the band 5.725-5.85 GHz, the maximum conducted output power over the frequency band of operation shall not exceed 1 W. In addition, the maximum power spectral density shall not exceed 30 dBm in any 500-kHz band. If transmitting antennas of directional gain greater than 6 dBi are used, both the maximum conducted output power and the maximum power spectral density shall be reduced by the amount in dB that the directional gain of the antenna exceeds 6 dBi. However, fixed point-to-point U-NII devices operating in this band may employ transmitting antennas with directional gain greater than 6 dBi without any corresponding reduction in transmitter conducted power. Fixed, point-to-point operations exclude the use of point-to-multipoint systems, omnidirectional applications, and multiple collocated transmitters transmitting the same information. The operator of the U-NII device, or if the equipment is professionally installed, the installer, is responsible for ensuring that systems employing high gain directional antennas are used exclusively for fixed, point-to-point operations.

6.2 TEST PROCEDURE

a. The EUT was directly connected to the Power meter

6.3 DEVIATION FROM STANDARD

No deviation.

6.4 TEST SETUP

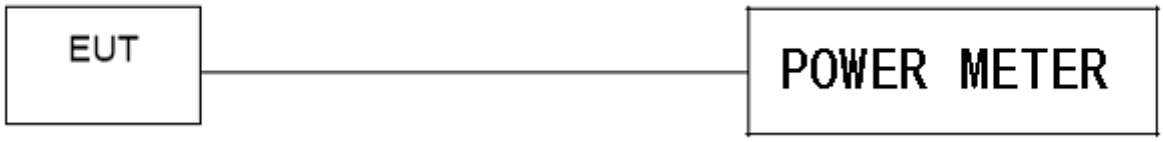

6.5 EUT OPERATION CONDITIONS

The EUT tested system was configured as the statements of 2.4 Unless otherwise a special operating condition is specified in the follows during the testing.

6.6 TEST RESULTS

Temperature：	26 ℃	Relative Humidity：	54%
Pressure：	101kPa	Test Voltage ：	DC 12V
Test Mode ：	TX Frequency Band I (5.2GHz)		

Note: Antenna A gain: 2dBi, Antenna B gain: 2dBi, Directional gain=2+10log(2) dbi =5.01dbi

Test Channel	Frequency	Maximum output power. Antenna port (AV)	Maximum output power. Antenna port (AV)	Total Power Conducted Output Power(PK)	LIMIT	Result
	(MHz)	(dBm)	(dBm)	(dBm)	dBm	
		Antenna A	Antenna B			
TX 5200MHz Mode						
CH01	5200	17.40	11.96	18.49	30	Pass

Note: The wireless module support MIMO.

7. OUT OF BAND EMISSIONS

7.1 APPLICABLE STANDARD

According to FCC §15.407(b)

Undesirable emission limits. Except as shown in paragraph (b)(7) of this section, the maximum emissions outside of the frequency bands of operation shall be attenuated in accordance with the following limits:

(1) For transmitters operating in the 5.15-5.25 GHz band: All emissions outside of the 5.15-5.35 GHz band shall not exceed an e.i.r.p. of −27 dBm/MHz.

(2) For transmitters operating in the 5.725-5.85 GHz band: All emissions within the frequency range from the band edge to 10 MHz above or below the band edge shall not exceed an e.i.r.p. of −17 dBm/MHz; for frequencies 10 MHz or greater above or below the band edge, emissions shall not exceed an e.i.r.p. of −27 dBm/MHz.

7.2 TEST PROCEDURE

1. Check the calibration of the measuring instrument using either an internal calibrator or a known signal from an external generator.
2. Position the EUT without connection to measurement instrument. Turn on the EUT and connect its antenna terminal to measurement instrument via a low loss cable. Then set it to any one measured frequency within its operating range, and make sure the instrument is operated in its linear range.
3. Set RBW of spectrum analyzer to 1 MHz with a convenient frequency span.
4. Measure the highest amplitude appearing on spectral display and set it as a reference level. Plot the graph with marking the highest point and edge frequency.
5. Repeat above procedures until all measured frequencies were complete.

7.3 DEVIATION FROM STANDARD

No deviation.

7.4 TEST SETUP

7.5 EUT OPERATION CONDITIONS

The EUT tested system was configured as the statements of 2.4 Unless otherwise a special operating condition is specified in the follows during the testing.

7.6 TEST RESULTS

Temperature：	26 ℃	Relative Humidity：	54%
Pressure：	101kPa	Test Voltage ：	DC 12V

5.2 GHz

ANTA (5.2 GHz) Band Edge

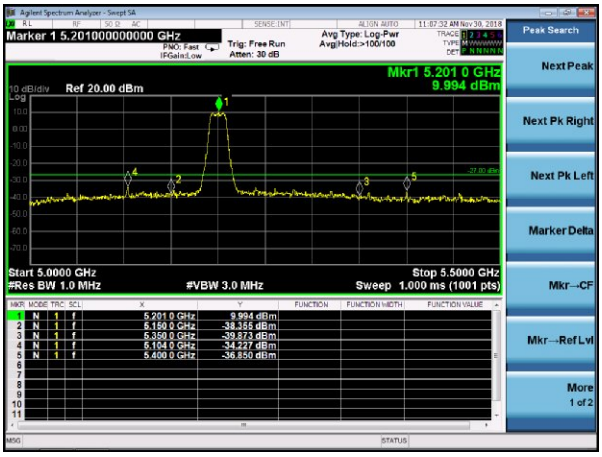

ANTB (5.2 GHz) Band Edge

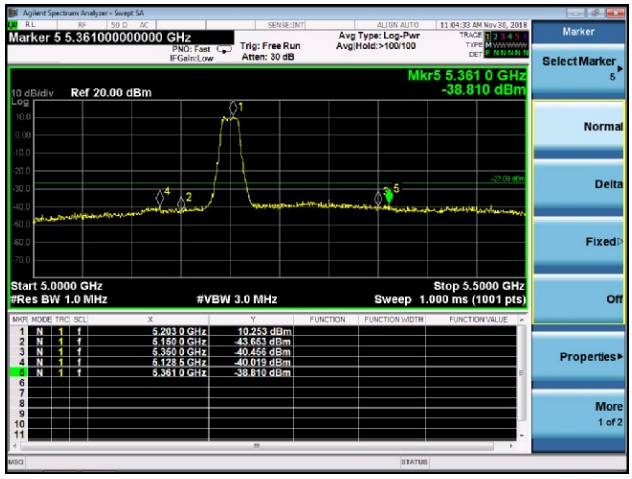

Out of Band edge ANTA
or the frequency band 5.150-5.250GHz

Test CH.	Test Segment	Result	Limit
	MHz	dBm/MHz	dBm/MHz
Lowest	Below 5150	-37.443	-27
		-37.207	-27
Highest	Above 5350	-35.483	-27
		-33.973	-27

Out of Band edge ANTB
or the frequency band 5.150-5.250GHz

Test CH.	Test Segment	Result	Limit
	MHz	dBm/MHz	dBm/MHz
Lowest	Below 5150	-39.636	-27
		-36.364	-27
Highest	Above 5350	-37.391	-27
		-34.377	-27

9.SPURIOUS RF CONDUCTED EMISSIONS

9.1CONFORMANCE LIMIT

1. Below -20dB of the highest emission level in operating band.
2. Fall in the restricted bands listed in section 15.205. The maximum permitted average field strength is listed in section 15.209.

9.2MEASURING INSTRUMENTS

The Measuring equipment is listed in the section 6.3 of this test report.

9.3TEST SETUP

Please refer to Section 6.1 of this test report.

9.4TEST PROCEDURE

The Spurious RF conducted emissions compliance of RF radiated emission should be measured by following the guidance in ANSI C63.10-2013 with respect to maximizing the emission by rotating the EUT, measuring the emission while the EUT is situated in three orthogonal planes (if appropriate), adjusting the measurement antenna height and polarization etc. Set RBW=100kHz and VBW= 300KHz to measure the peak field strength , and mwasure frequeny range from 9KHz to 26.5GHz.

9.5TEST RESULTS

Remark: The measurement frequency range is from 9KHz to the 10th harmonic of the fundamental frequency. The lowest, middle and highest channels are tested to verify the spurious emissions and bandege measurement data.

5.2G

ANTA Test Plot

5.2G on channel 01

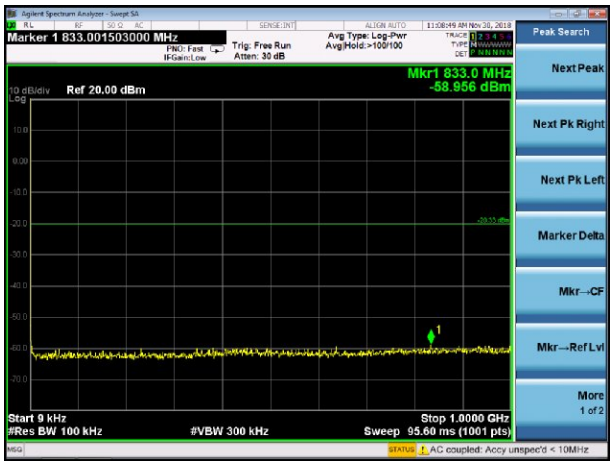

5.2G on channel 01

5.2G on channel 01

5.2G

ANTB Test Plot

5.2G on channel 01

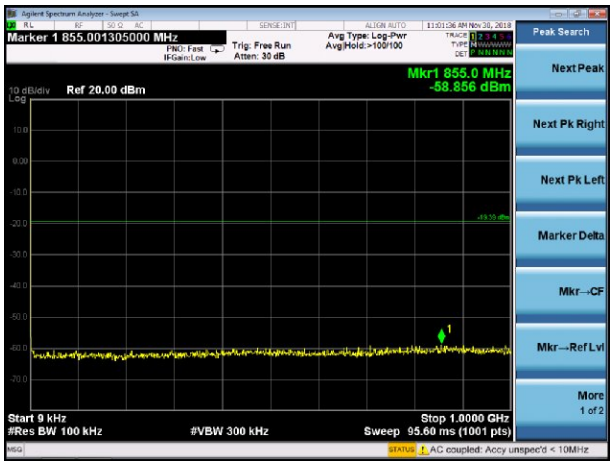

5.2G on channel 01

5.2G on channel 01

10. Frequency Stability Measurement

10.1 LIMIT

Manufactures of U-NII devices are responsible for ensuring frequency stability such that an emission is maintained within the band of operation under all conditions of normal operation as specified in the user's manual.

The transmitter center frequency tolerance shall be ± 20 ppm maximum for the 5 GHz band (IEEE 802.11n specification).

10.2 TEST PROCEDURES

1. The transmitter output (antenna port) was connected to the spectrum analyzer.
2. EUT have transmitted absence of modulation signal and fixed channelize.
3. Set the spectrum analyzer span to view the entire absence of modulation emissions bandwidth.
4. Set RBW = 10 kHz, VBW = 10 kHz with peak detector and maxhold settings.
5. fc is declaring of channel frequency. Then the frequency error formula is (fc-f)/fc × 10^6 ppm and the limit is less than ±20ppm (IEEE 802.11nspecification).
6. The test extreme voltage is to change the primary supply voltage from 85 to 115 percent of the nominal value
7. Extreme temperature is -20°C~70°C.

10.3 TEST SETUP LAYOUT

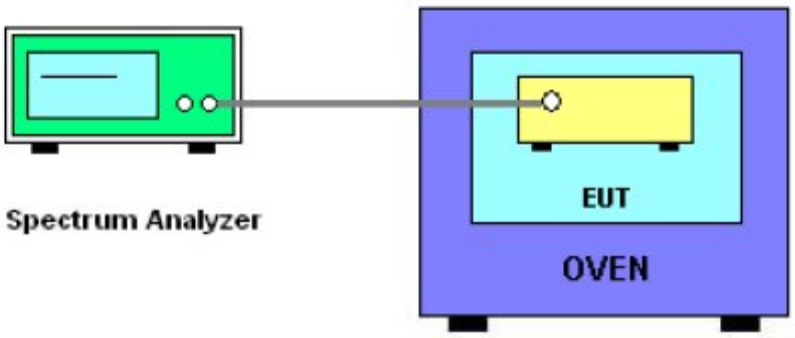

10.4 EUT OPERATION DURING TEST

The EUT was programmed to be in continuously un-modulation transmitting mode.

10.5 TEST RESULTS

Temperature：	26 ℃	Relative Humidity：	54%
Pressure：	101kPa	Test Voltage ：	DC 12V
Test Mode ：	TX Frequency Band I (5.2GHz)		

Voltage vs. Frequency Stability

TEST CONDITIONS				Reference Frequency：5200MHz			
				f	fc	Max. Deviation (MHz)	Max. Deviation (ppm)
T nom (°C)	20	V nom (V)	12.00	5200.0251	5200	0.0251	-4.8269
		V max (V)	13.80	5200.0421	5200	0.0421	-8.0962
		V min (V)	10.20	5200.0698	5200	0.0698	-13.4231
Limits				± 20 ppm			
Result				Complies			

Temperature vs. Frequency Stability

TEST CONDITIONS				Reference Frequency：5200MHz			
				f	fc	Max. Deviation (MHz)	Max. Deviation (ppm)
V nom (V)	12	T (°C)	-20	5200.0631	5200	0.0631	-12.1346
		T (°C)	-10	5200.0525	5200	0.0525	-10.0962
		T (°C)	0	5200.0431	5200	0.0431	-8.2885
		T (°C)	10	5200.0921	5200	0.0921	-17.7115
		T (°C)	20	5200.0631	5200	0.0631	-12.1346
		T (°C)	30	5200.0125	5200	0.0125	-2.4038
		T (°C)	40	5200.0738	5200	0.0738	-14.1923
		T (°C)	50	5200.0415	5200	0.0415	-7.9808
		T (°C)	60	5200.0324	5200	0.0324	-6.2308
		T (°C)	70	5200.0426	5200	0.0426	-8.1923
Limits				± 20 ppm			
Result				Complies			

11. ANTENNA REQUIREMENT

11.1 STANDARD REQUIREMENT

15.203 requirement: For intentional device, according to 15.203: an intentional radiator shall be designed to ensure that no antenna other than that furnished by the responsible party shall be used with the device.

11.2 EUT ANTENNA

The EUT antenna is External antenna. It comply with the standard requirement.

12. EUT TEST PHOTO

Radiated Measurement Photos

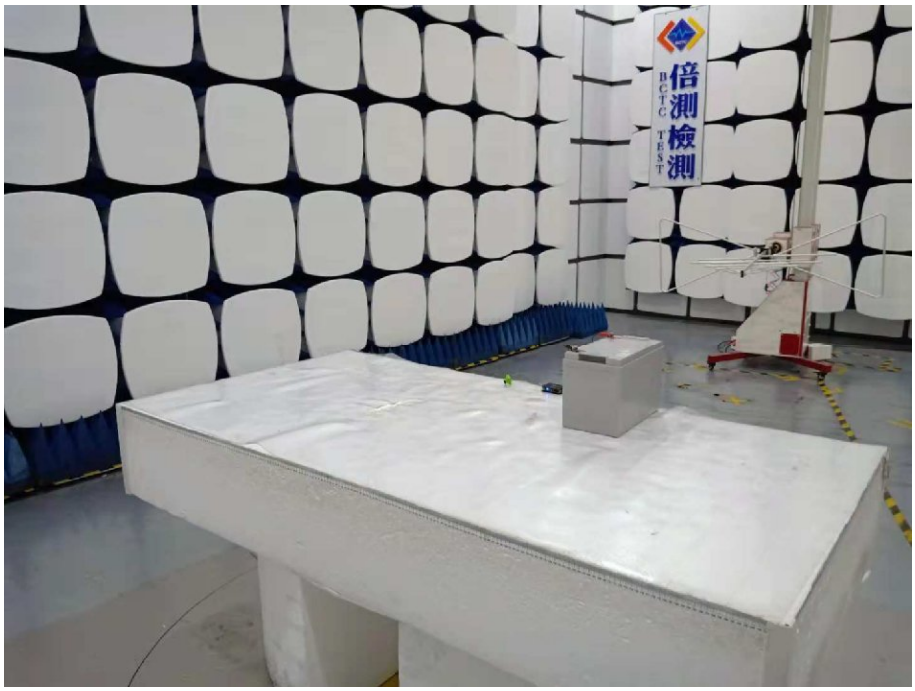

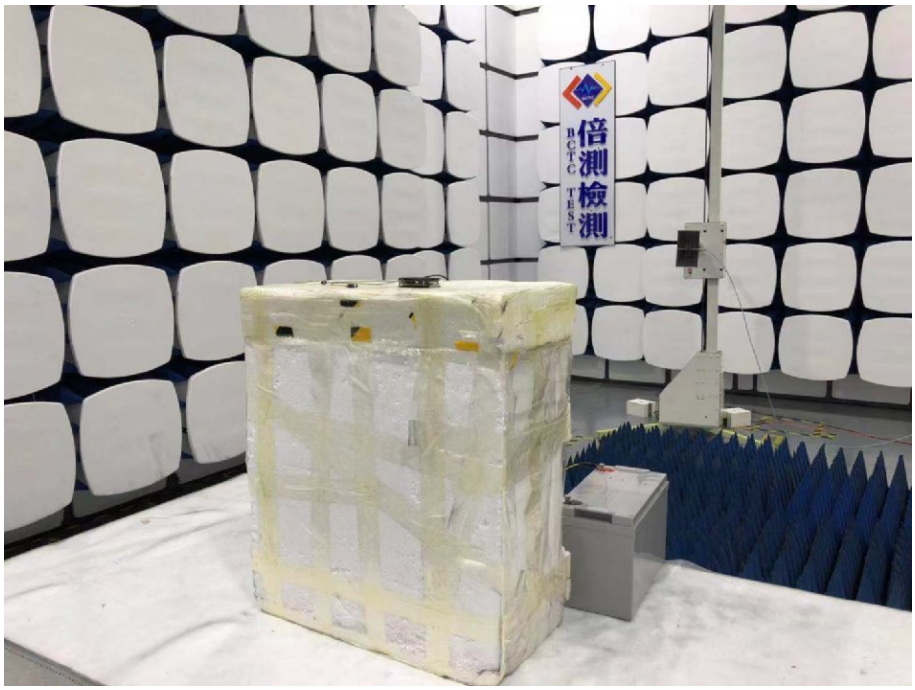

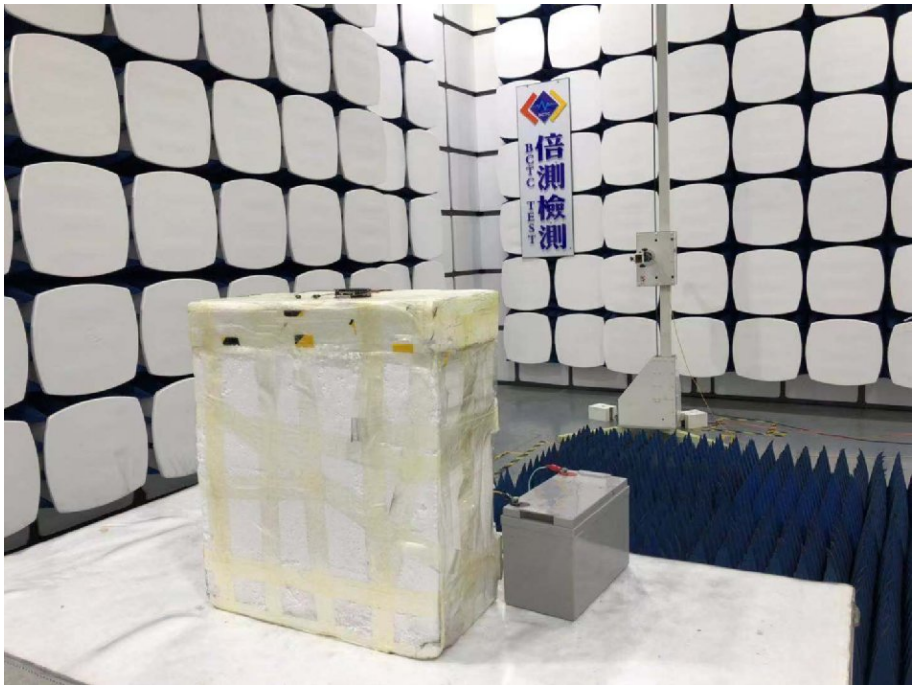
倍測檢測
BCTC TEST

13. EUT PHOTO

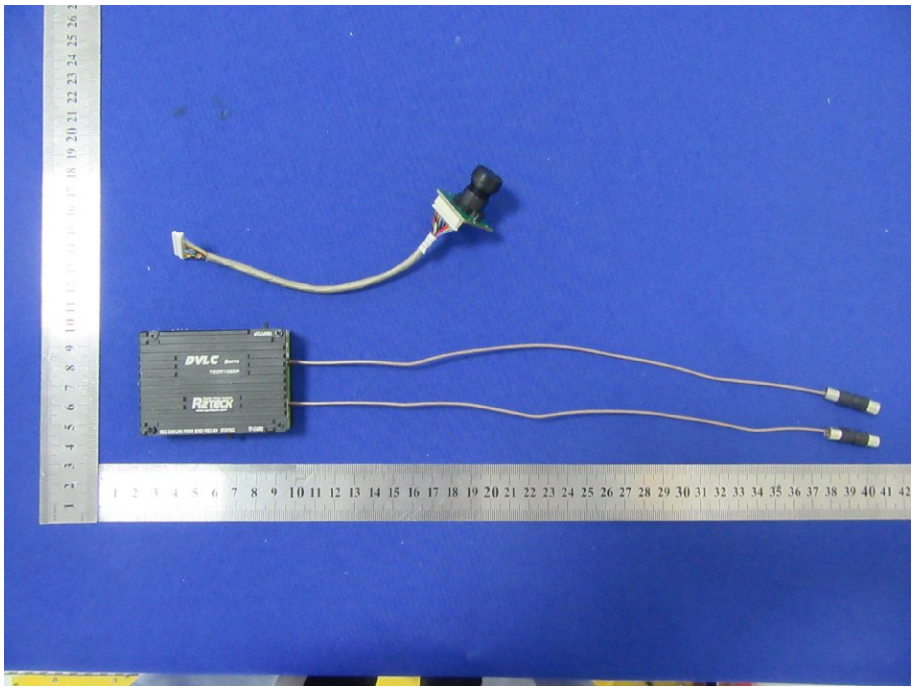

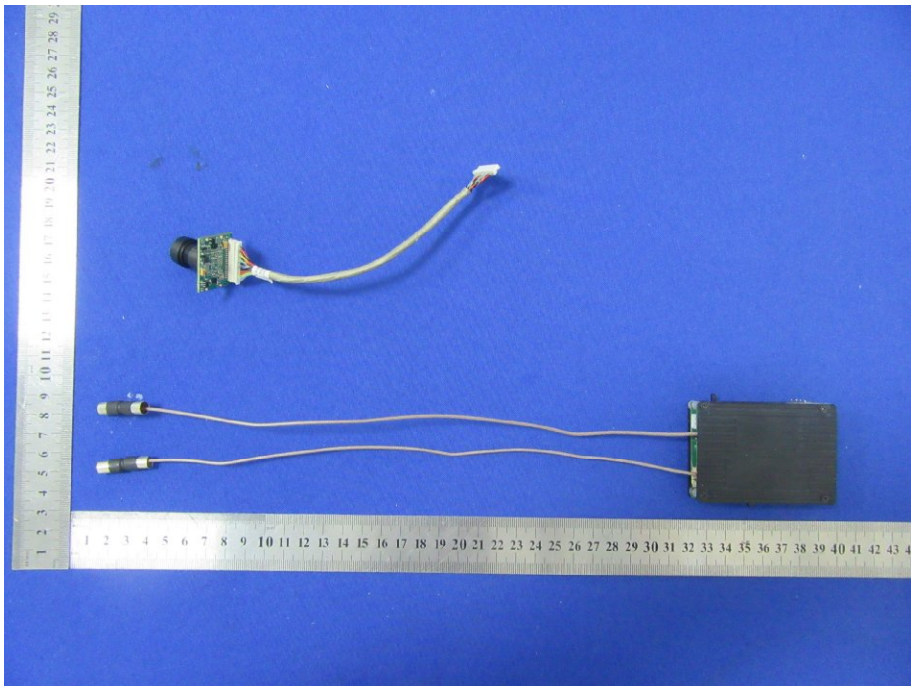

※※※※※ **END OF REPORT** ※※※※※