Product Specification

Rev: C3-03
Dec 31st, 2018

Loud Hailer
Bukibox Specification Document
LHRU_BAPB

VVDN Contact
POE Name: Arvind Kumar Gupta
E-mail: arvindkgupta@gmail.com
Mobile: +91-9811596683

Revision History

Date	Rev No.	Description	By
21st August 2018	C3-01	First Draft	VVDN
5th October 2018	C3-02	BLE Chipset changed to CC2642R, Updated Rev C Mechanical Updates	VVDN
31st December 2018	C3-03	Certification Warnings	VVDN

Table of Contents

1 INTRODUCTION..... 4

1.1 PRODUCT OVERVIEW 4
1.2 PHYSICAL APPEARANCE 4
1.3 CONNECTION DIAGRAM 6
1.4 PHYSICAL DIMENSIONS 7
1.5 HARDWARE TECHNICAL SPECIFICATIONS 8

2 CERTIFICATION WARNINGS: 9

1 Introduction

This document narrates the Technical hardware specification of the Bukibox-Rev C hardware used in LHRU_BAPB. It is basically meant for the end customer.

1.1 Product Overview

Different LEDs are Accessible on the board for providing the status of Power, Device status, Ethernet WAN, Ethernet LAN, Wireless LTE, Wi-Fi, BLE, GPS and Cloud.

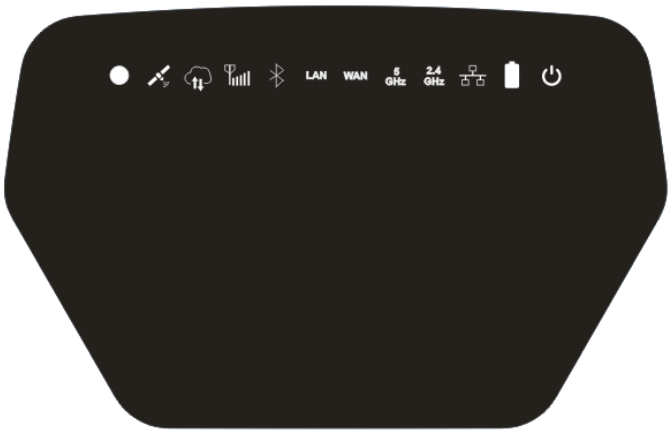

1.2 Physical appearance

The Device is in Deep Black color with the body of the device to be matte finished and the sticker to be highly glossy. The device is highlighted with the 12 muted LED lights for notifications, which are barely visible when off. The following are the images for device reference (rendered images).

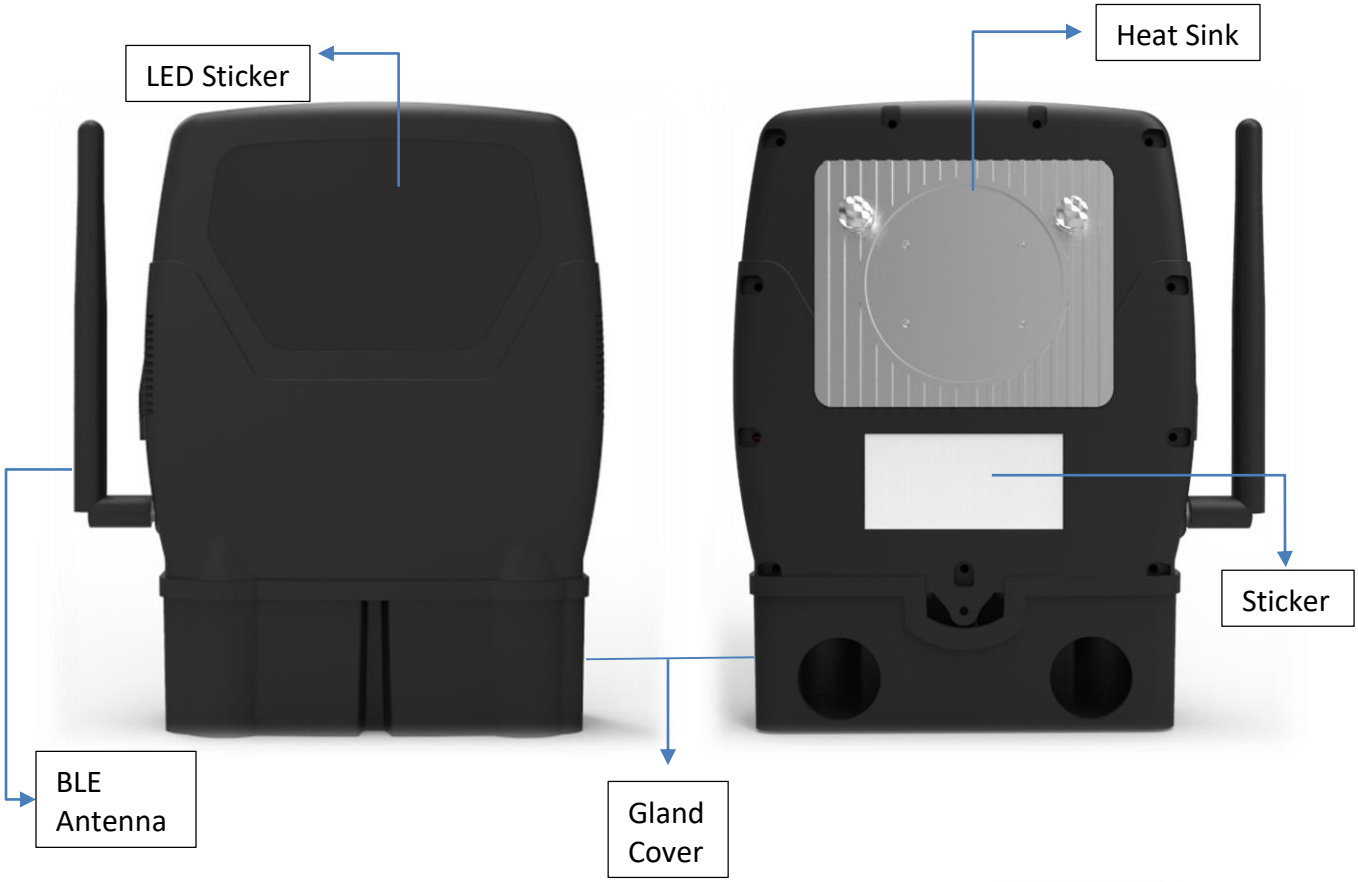
LED Sticker
Heat Sink
Sticker
BLE Antenna
Gland Cover

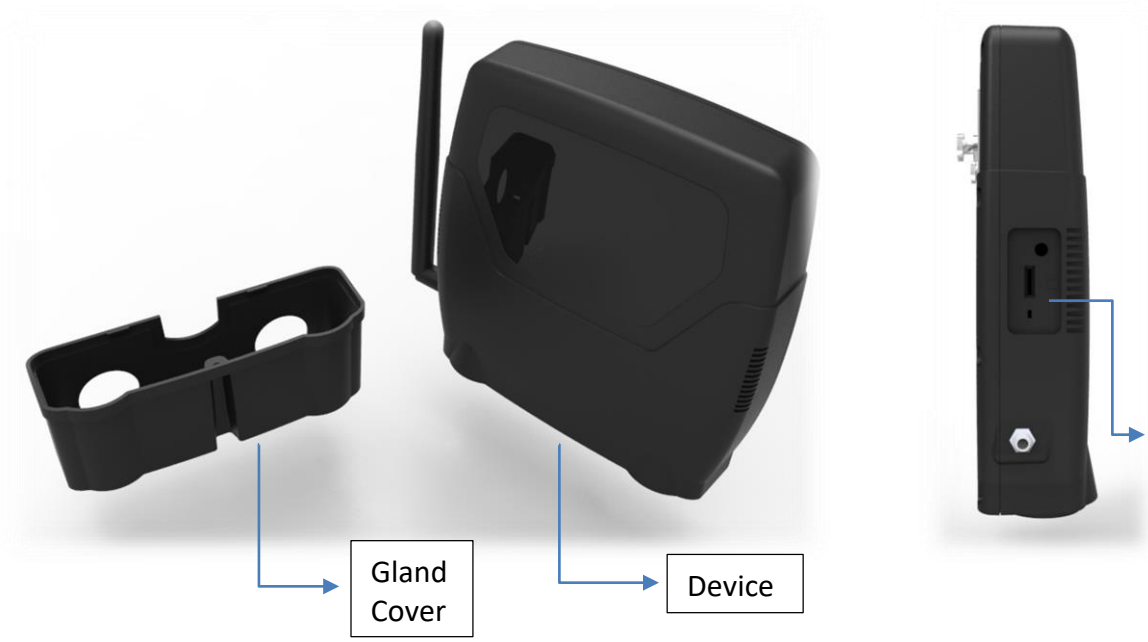
Gland Cover
Device
SIM & Reset Slot, below rubber seal

1.3 Connection Diagram

The Following image shows us the user accessible ports in our Buki Box. User accessible ports are DC Power adaptor, DC Battery jack, LAN , WAN and SIM Card .

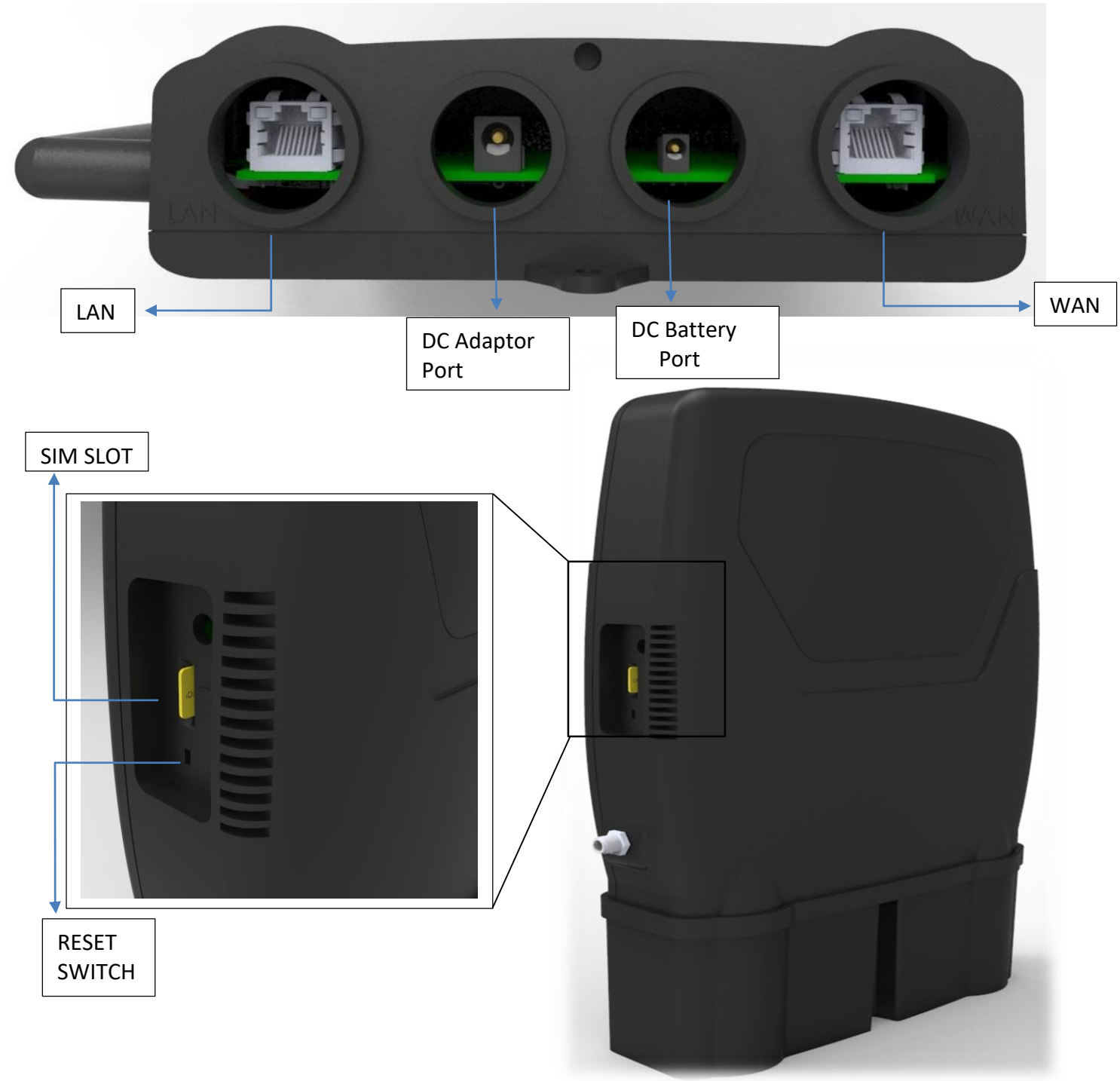

1.4 Physical Dimensions

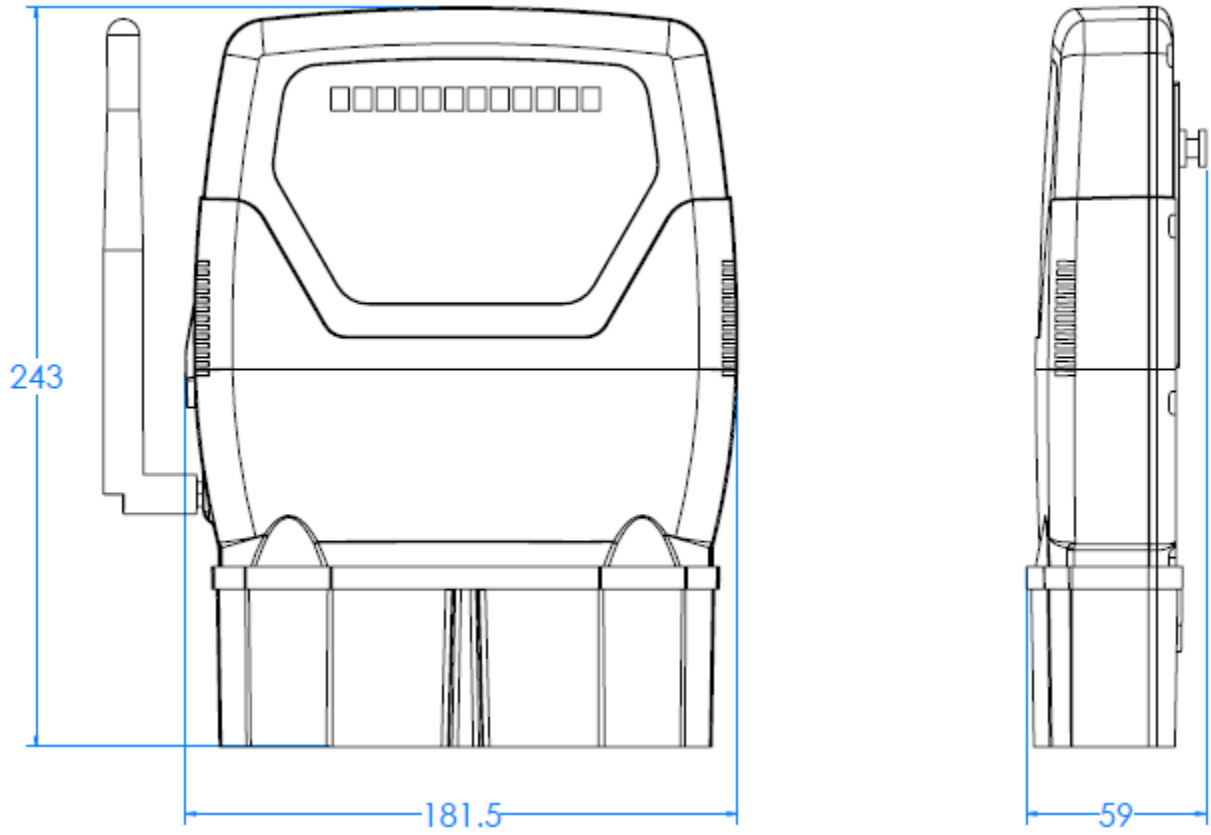

1.5 Hardware Technical Specifications

LHRU_BAPB

BLE Based Access Point with 1x1 SISO Wi-Fi/GPS/LTE Connectivity — Data Sheet

Technical Specifications

- Dual band Wi-Fi 802.11 b/g/n/ac
- 1X1 SISO Wi-Fi configuration up to 20dBm output power
- Long range BLE (up to 70 meters LOS) and BLE FOTA support
- Box with PLS8 LTE Module from Gemalto (Cat.3 LTE (+23dBm)).
- Inbuilt GPS in PLS8 module with Assisted GNSS and active Antenna for better performance
- 1LAN and 1WAN including PoE (PD) functionality with Enhanced Classification per IEEE 802.3at
- Buki-Box input power options: PoE or 12V/2A DC adaptor or 12V/24V Battery.
- Battery power protection supports OV, UV, reverse voltage and surge protection
- Best quality 12V@2.1A DC adaptor including OV, Over current, and Short circuit protections with FCC/UL/cUL, PSE safety approvals
- Supports ORing Feature (PoE + Adaptor + Battery)
- 256MB DDR3L RAM
- 8GB eMMC memory and 32MB NOR Flash memory
- IP64 rated
- Industrial Grade (-20 to +65 deg C)
- RTC Battery life time up to 13 yrs.
- Device supports E-SIM and USIM (One at a time)

Package Contents

- Two cable Glands each of M22X1.5 & M25X1.5, Black Nylon for Passing cables Screws
- Two End caps each of M22X1.5 & M25X1.5, Black Nylon for Blocking Non Used Holes
- Wall Mounting with screws, static mounting to wall for device
- BLE Whip Antenna having gain 5dBi
- DC Power Adaptor (12V@2.1A)
- Male Connector Cable for battery power source
- Pole Mounting Block with Screws, Block for Mounting Pole mounting to Device

Add-on Accessories

The device is also added with a Pole/Wall mounting that can be easily rotated. Following are the details:

- Pole Mounting with Screws & Accessories. (Compatible with RF Element SXT2.0 & Microtik Pro)

Note: Add-on accessories not provided by VVDN.

Physical Specifications

- Dimensions: 9.56 x 7.14 x 2.32 in (243 x 181.5 x 59mm)
- Weight: 1.98 lb (900 g)

Performance

Wi-Fi Throughput: 330Mbps for 5GHz @433Mbps link
120Mbps for 2.4GHz@200Mbps link
& 40-50Mbps for 2.4GHz@96Mbps link
Wi-Fi Range: Max. Range 2.4 GHz: ~40-50m
Max. Range 5GHz: ~25m
Ethernet Ports (LAN/WAN) Throughput: 875-930 Mbps
BLE Range: up to 70m (LOS)
LTE Throughput: Downloading Speed (up to 3.5Mbps) &
Uploading Speed (up to 6.76Mbps)
Vibration Resistance: Up to 5G for 30 min
Power Consumption: 8.4W

System Requirements

- 12V@2.1A DC Adaptor, 48V PoE Adaptor or 12V external battery
- Broadband (DSL service) internet service and Ethernet connection or a USIM
- IOS and Android Mobile

Security

- Crypto engine
- Authentication algorithms SHA1, SHA224 (the result of supporting SHA256), SHA256, and HMAC-SHA1 and HMAC-SHA2
- XTS/CTR/CCM/CMAC mode for AES
- CBC/ECB mode both for AES and DES/3DES
- Pseudo-random number generator
- Trust Zone

Standards

- IPQ4029 Chipset from Qualcomm Dual band (2.4GHz & 5GHz) Wi-Fi module capable of 802.11 b/g/n/ac
- Two (2) 10/100/1000 Mbps (1 WAN & 1 LAN IEEE 802.3at) Gigabit Ethernet ports
- CC2642, Bluetooth Low Energy 5.0, chipset from Texas Instruments
- Gemalto module PLS8-US having following standards like CFR Title 47 (FCC), OET Bulletin 65 (Edition 97-01), UL 60 950-1 ,NAPRD.03 V5.24, RSS130/RSS132/RSS133/RSS139 Canadian standards.

2 Certification Warnings:

FCC

Federal Communication Commission Interference Statement

This equipment has been tested and found to comply with the limits for a Class B digital device, pursuant to Part 15 of the FCC Rules. These limits are designed to provide reasonable protection against harmful interference in a residential installation.
This equipment generates, uses and can radiate radio frequency energy and, if not installed and used in accordance with the instructions, may cause harmful interference to radio communications. However, there is no guarantee that interference will not occur in a particular installation. If this equipment does cause harmful interference to radio or television reception, which can be determined by turning the equipment off and on, the user is encouraged to try to correct the interference by one of the following measures:

. Reorient or relocate the receiving antenna.
. Increase the separation between the equipment and receiver.
. Connect the equipment into an outlet on a circuit different from that to which the receiver is connected.
. Consult the dealer or an experienced radio/TV technician for help.

FCC Caution: To assure continued compliance, any changes or modifications not expressly approved by the party responsible for compliance could void the user's authority to operate this equipment. (Example - use only shielded interface cables when connecting to computer or peripheral devices).

FCC Radiation Exposure Statement

This equipment complies with FCC RF radiation exposure limits set forth for an uncontrolled environment. This equipment should be installed and operated with a minimum distance of 20 centimeters between the radiator and your body.

This transmitter must not be co-located or operating in conjunction with any other antenna or transmitter.

The antennas used for this transmitter must be installed to provide a separation distance of at least 20 cm from all persons and must not be co-located or operating in conjunction with any other antenna or transmitter.

This device complies with Part 15 of the FCC Rules. Operation is subject to the following two conditions:
(1) This device may not cause harmful interference, and (2) This device must accept any interference received, including interference that may cause undesired operation.

Industry Canada Statement

This device complies with Industry Canada licence-exempt RSS standard.
Operation is subject to the following two conditions: (1) this device may not cause interference, and (2) this device must accept any interference, including interference that may cause undesired operation of the device.

Le présent appareil est conforme aux CNR d'Industrie Canada applicables aux appareils radio exempts de licence. L'exploitation est autorisée aux deux conditions suivantes : (1) l'appareil ne doit pas produire de brouillage, et (2) l'utilisateur de l'appareil doit accepter tout brouillage radioélectrique subi, même si le brouillage est susceptible d'en compromettre le fonctionnement.

IC Radiation Exposure Statement:

This equipment complies with IC RSS-102 radiation exposure limit set forth for an Uncontrolled environment. This equipment should be installed and operated with minimum distance 20 cm between the radiator and your body.

Cet équipement est conforme aux CNR-102 d'Industrie Canada. Cet équipement doit êtreinstallé et utilisé avec une distance minimale de 20 centimètres entre le radiateur et votrecorps. Cet émetteur ne doit pas être co-localisées ou opérant en conjonction avec autreantenne ou émetteur. Les antennes utilisées pour cet émetteur doivent être installés etfournir une distance de séparation d'au moins 20 centimètre de toute personne et doit pas être co-située ni fonctionner en conjonction avec une autre antenne ou émetteur.