7.4. Tool Verification

When a new tool enters the area the system requests tool verification. The surgeon sees a red notice on the **HEADSET**.

Note: Tool verification is required for the screwdriver every time a new screw is attached to the tool.

Figure 32: Tool Verification

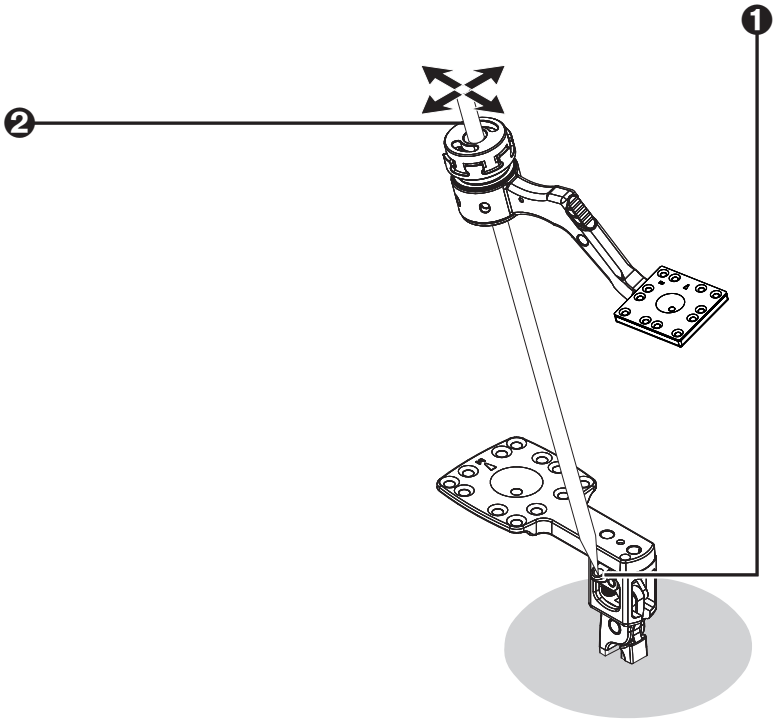

❶ Touch the tip of the surgical instrument to the v-point on the body clamp.
❷ Swivel the surgical instrument, keeping the tip on the v-point.

When verification has been completed the Headset and the computer where the **XVS SOFTWARE** is installed indicate **Tool OK**.

Note: If the patient marker is to be moved to the other side, touch the tool to the verification point.

7.5. Landmark Check

When the surgeon has verified the first tool a landmark check is done to verify that the **XVISION-SPINE** system is correctly interpreting the location of the tool tip.

Figure 33: Landmark Check

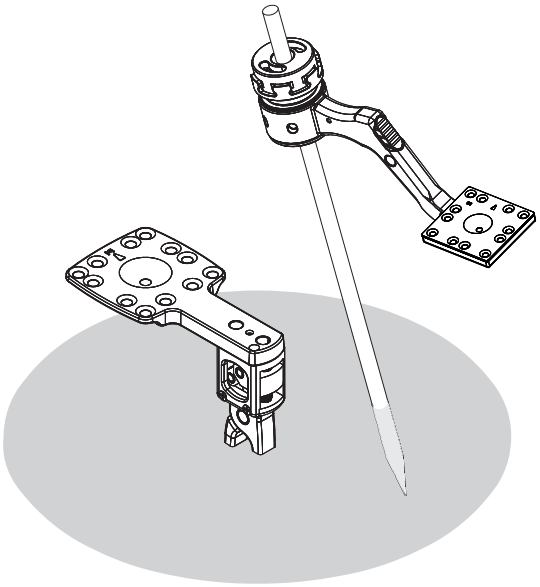

Figure 34: Landmark Check Screen

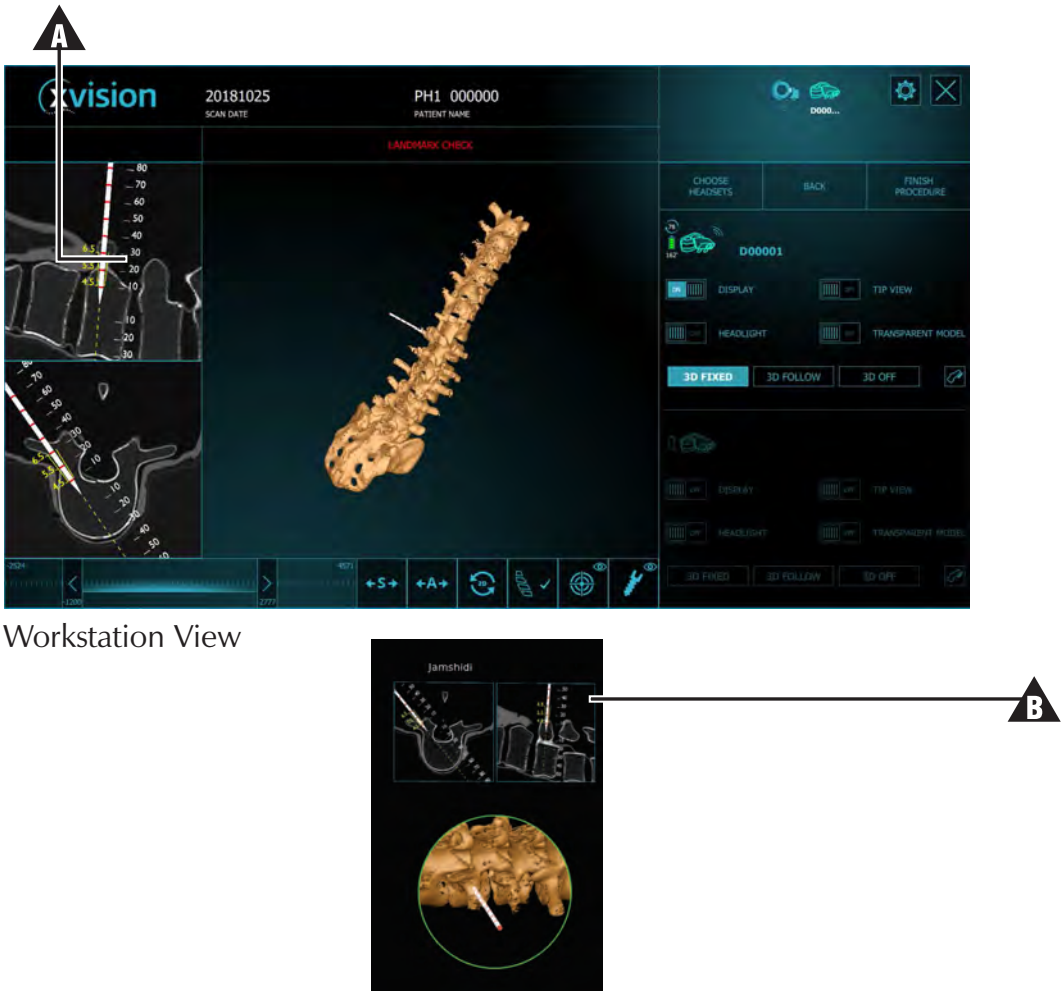

Workstation View

Headset View

Touch a known anatomical spot, such as a particular vertebra, or a part of the vertebra, with the tip of the tool. If the physical location of the instrument and the display of the **XVISION-SPINE** monitor (A) and the **HEADSET** (B) match, the surgeon instructs the technician to tap **Verified**.

Note: The landmark check is required only on the first tool after verification.

7.6. Virtual Target Guide

During the procedure the surgeon may want to prepare a trajectory for a tool, as follows:

Figure 35: Setting the Virtual Target Guide

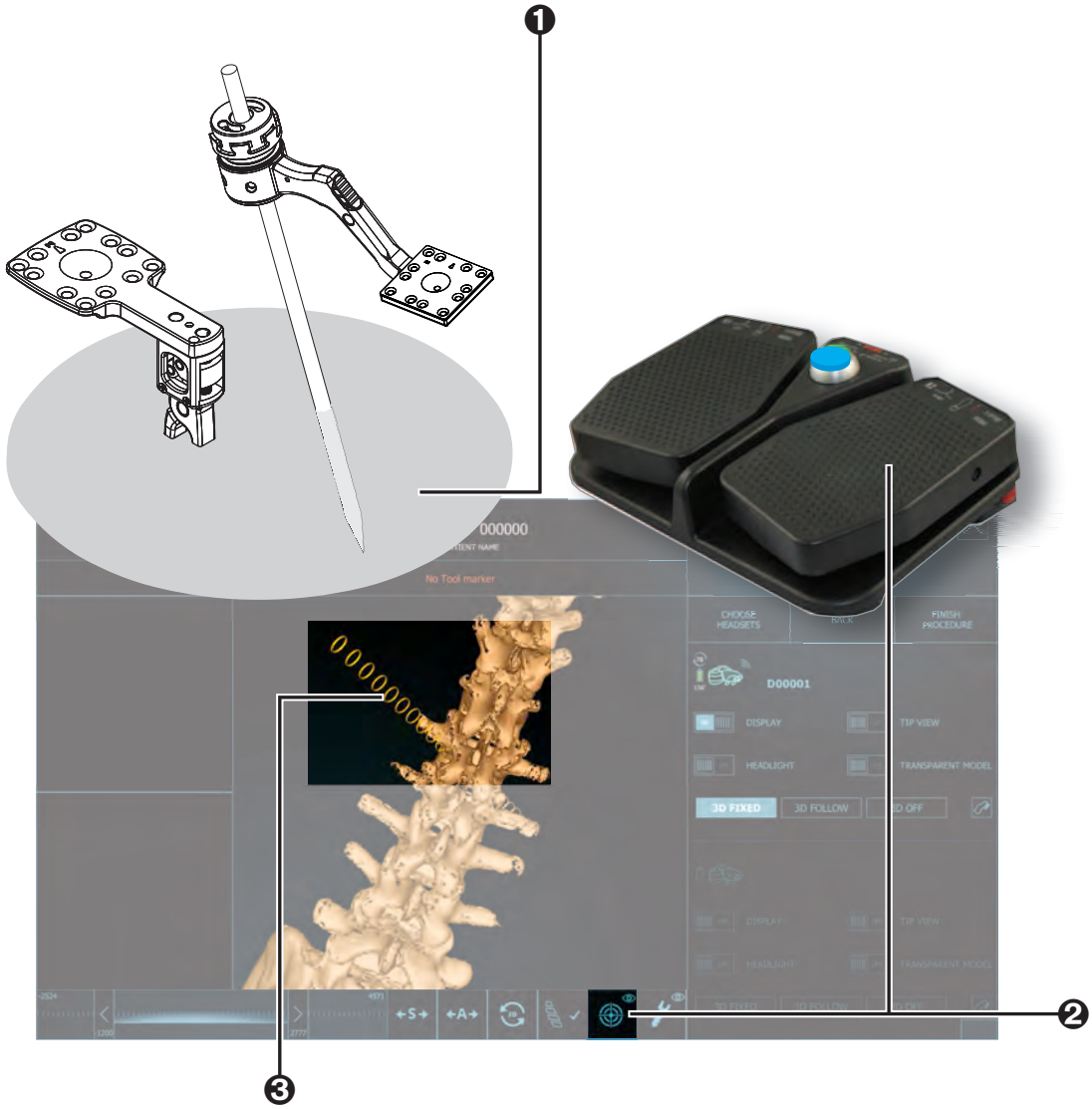

❶ Using the navigated tool, the surgeon touches the tip of the surgical instrument on any part of the patient's anatomy.
❷ The surgeon then presses the right pedal, or instructs the technician to tap the **Target** button.
❸ A new virtual target appears. It is composed of 20 yellow rings of the same diameter.

Note: The sections of every virtual target 60 mm above the tool tip are not displayed. When 11 rings are highlighted, highlight also the lines of the target in the 2D views.
When two rings are highlighted, the target can be removed by footswitch or UI button.

Figure 36: Using the Virtual Target Guide

Workstation View

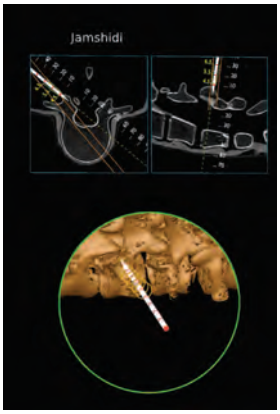

Headset View

❶ When the tool is placed within the field of view it appears on the visual display.

Workstation View

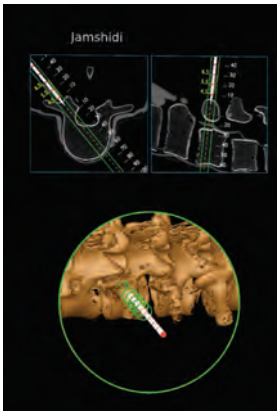

Headset View

❷ Bring the tool to the first yellow ring to align it with the trajectory. As the tool moves down the trajectory the rings change to a green color. Continue moving the tool along the virtual trajectory until all of the rings are green.

Note: Pressing the **Target** button when fewer than three loops are colored green results in adding another target.

The surgeon now has a virtual trajectory guide that can be used to insert another surgical tool at the same location.

Figure 37: Inserting a Screw Using the Virtual Trajectory Guide

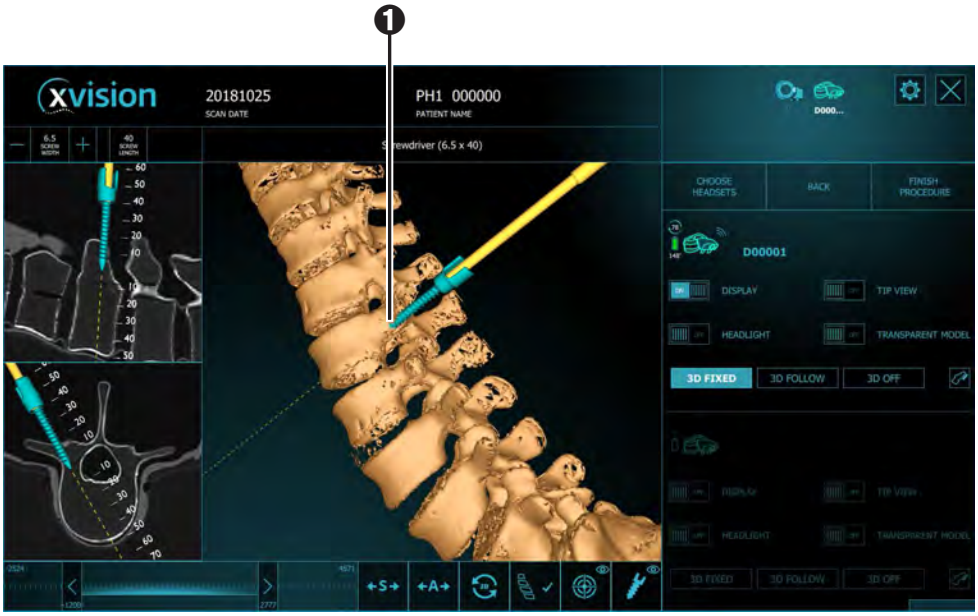

Workstation View

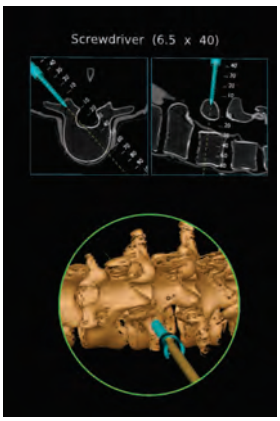

Headset View

❶ Align the screw along the virtual trajectory guide and insert it.

Workstation View

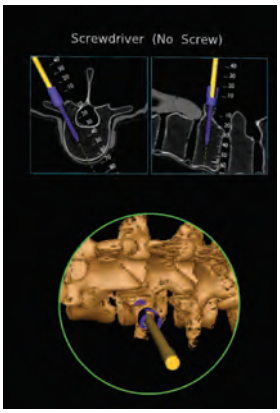

Headset View

❷ When the screw has been inserted the technician taps the screw icon to release to the tool.
❸ The screw turns purple

Workstation View

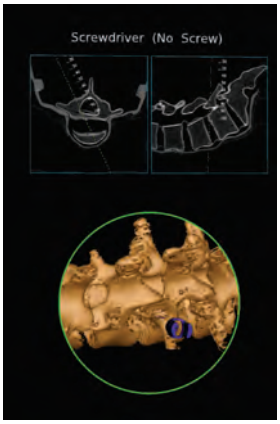

Headset View

❹ As screws are inserted they appear purple in the workstation view and headset view.
❺ Tap the eye on the screw icon to hide (or view) the virtual screws

To remove a virtual target do the following.

Figure 38: Remove Virtual Target and Virtual Screw

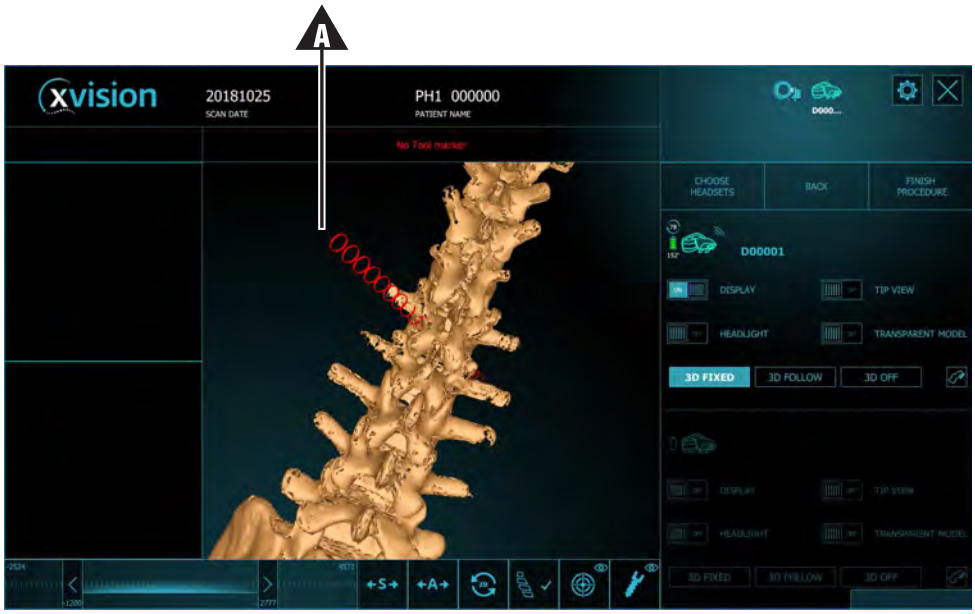

- Click the target. When it turns red (A) click it again.
  or
- Move the tool inside the green funnel and click the target or the footswitch.

7.7. Ending an xvision-Spine Procedure

At the end of the **XVS** portion of the surgical procedure follow the steps below:

Figure 39: Removing the **XVS** Spine Clamp

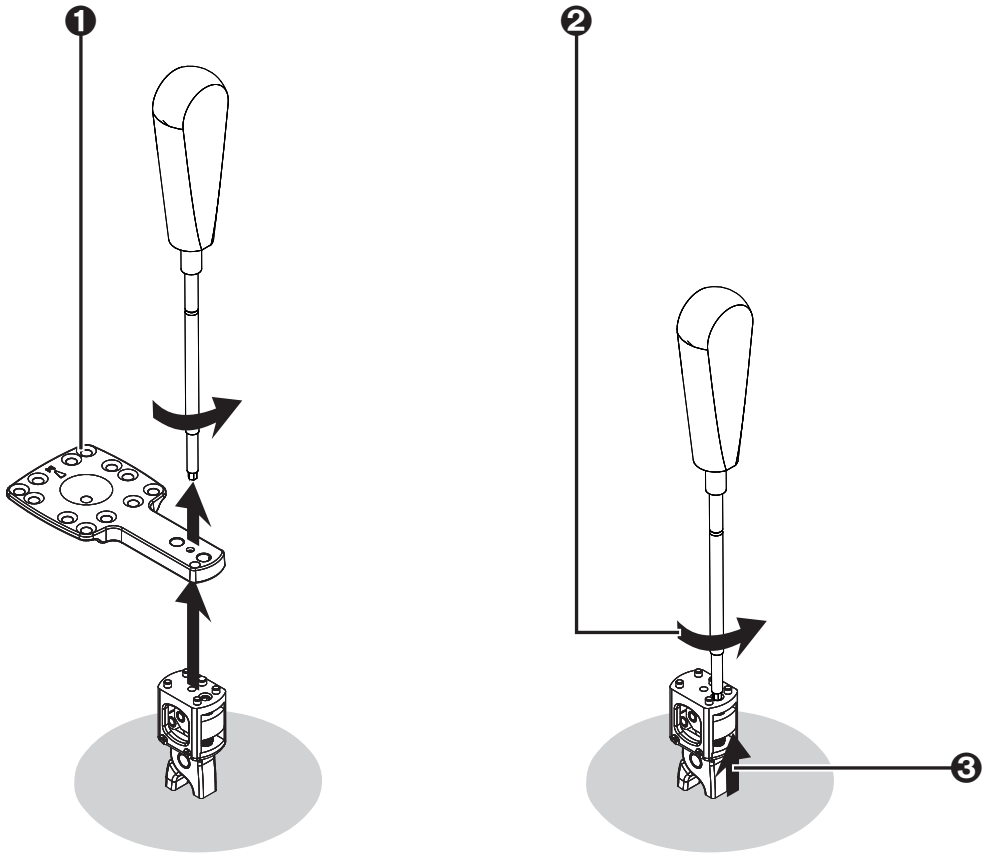

❶ Remove the patient marker from the patient clamp using the allen screwdriver and discard it.

❷ Loosen the patient clamp using the allen screwdriver and set it aside for cleaning and sterilization.

Note: In some cases the patient clamp cannot be loosened using the allen screwdriver. In this case continue with *Clamp Removal Tool* (page 7-20).

❸ Remove the patient clamp and set it aside for cleaning and sterilization. Continue with *Final Steps* (page 7-21).

Clamp Removal Tool

Follow the procedure below when the patient clamp cannot be loosened using the allen screwdriver.

Note: The clamp removal tool releases a screw in the patient clamp and renders it obsolete. The patient clamp cannot be reused.

Figure 40: Clamp Removal Tool

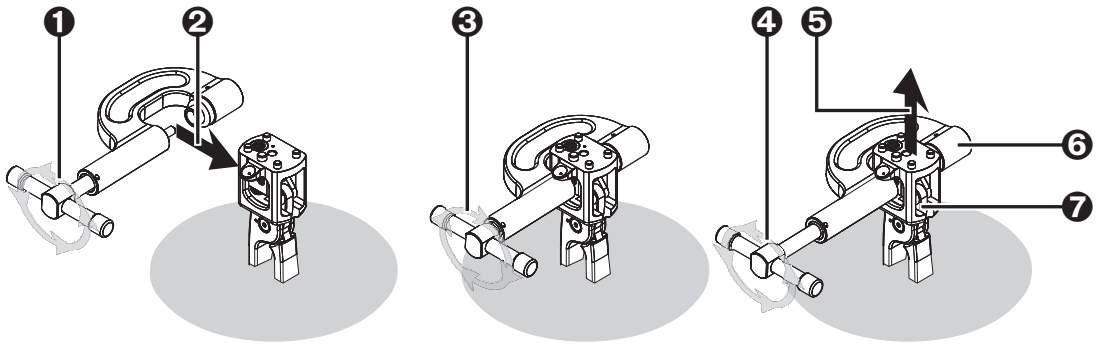

❶ Rotate the handle of the clamp removal tool in a counter-clockwise direction.
❷ When the jaws are open sufficiently, place the clamp over the patient clamp.
❸ Rotate the handle in clockwise direction until the clamp is fully closed.
❹ Rotate the handle in a counter-clockwise direction until the patient clamp opens completely.
❺ Remove the patient clamp and clamp removal tool.
❻ Set the clamp removal tool aside for cleaning and sterilization.
❼ Discard the patient clamp.

Final Steps

When the spine clamp has been removed continue as follows:

1. Remove surgical tools from their Universal Tool Adaptors and send them for cleaning and sterilization.
2. Tap **Finish Procedure** in the **XVS SOFTWARE**.
3. Power down the **HEADSET** by pressing the On/Off button.
4. Disconnect the battery cable.
5. Remove the **HEADSET**, taking care to touch only the plastic parts.
6. Place the **HEADSET** battery in the charging station.
7. Clean and disinfect the **HEADSET** according to the instructions in *Cleaning and Disinfection of the Headset* (page 8-3).
8. Dispose of all components from the Single Use Sterile Kit (patient markers, tool markers) according to local regulations for disposition of contaminated material.

8. Cleaning Reusable Components

Follow the procedure below to clean the reusable components of the **XVISION-SPINE** system:

- Patient clamps (XVS Straight Clamp, XVS Arc Clamp)
- Universal Tool Adaptors
- Allen screwdriver
- Z-Markers
- Navigated Tool Adaptors
- **XVS** adaptors
- **XVS** wrench
- Clamp Removal Tool
- VP Tool Adaptor

All reusable components must be thoroughly cleaned and sterilized before initial use and after each subsequent use.

None of the reusable components in the system require disassembly prior to cleaning.

Caution: Do not use solvents, lubricants, or other chemicals unless otherwise specified.

Note: Whenever possible, do not allow blood, debris, or body fluids to dry on instruments. For best results, and to prolong the life of the reusable components, process immediately after use.

8.1. Automatic Cleaning

Follow the pre-cleaning procedure below:

1. Rinse the devices under cold running utility water to remove gross soiling.

   Note: Water quality is specified in AAMI TIR34: 2014.

2. While rinsing, use a soft-bristled brush to aid in the removal of soiling, focusing on all hard-to-reach places. See the following figures for more information.
3. Prepare a detergent bath of Valsure® Enzymatic Cleaner at 8 mL per liter (1 oz per gallon) or Neodisher® Mediclean Forte Detergent at 5 mL per liter of lukewarm utility water in an ultrasonic unit.
4. Immerse the devices in the detergent bath and sonicate for a minimum of two minutes.
5. Transfer the devices onto a rack accessory contained inside the washer for processing.

Figure 41: Cleaning Patient Clamp

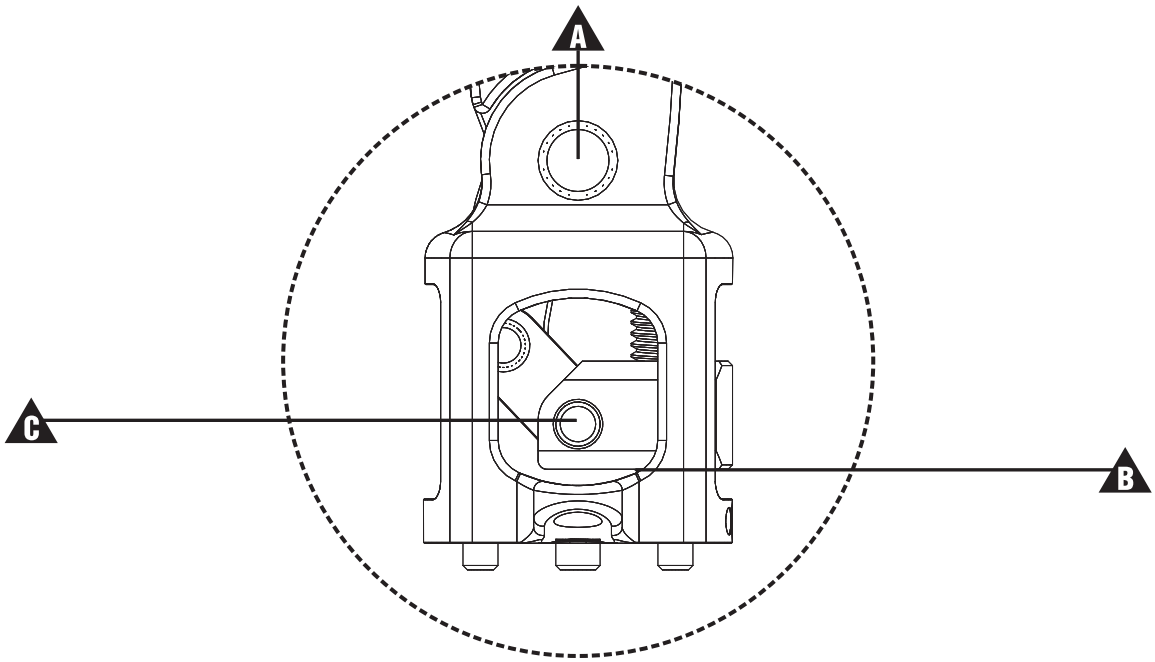

A Clamp pin
B Set screw
C Hinge pin

Figure 42: Cleaning Tool Adaptor Apertures

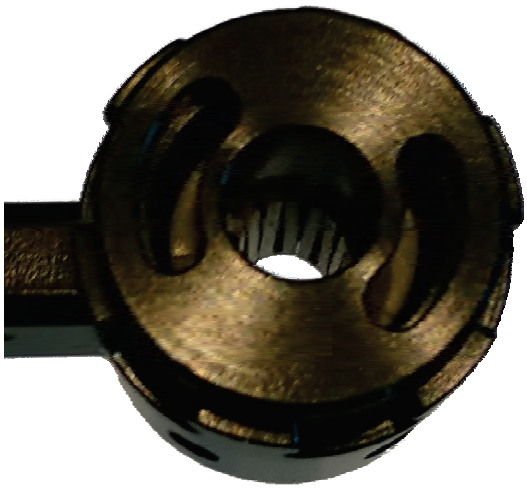

Take care to clean all surfaces.

Use the following washer cycle.

Phase	Recirculation Time (minutes)	Temperature	Detergent Type and Concentration (if applicable)
Pre-rinse 1	02:00	Cold utility water	N/A
Wash 1	02:00	43 °C utility water	Valsure® Neutral Detergent (US) at 2.0 mL/L or Neodisher® Mediclean Forte (EU) at 2.0 mL/L
Rinse 1	1:00	Cold utility water	N/A
Pure Water Rinse	1:00	43 °C criticall water	N/A
Dry Time	07:00	115 °C	N/A

8.2. Steam Sterilization

Sterilize the devices per the parameters below. Two cycles are possible.

Prior to the sterilization cycle, the tray of devices should be individually wrapped in two layers of 1-ply polypropylene wrap (Halyard Health H600 or equivalent).

Note: The hospital is responsible for cleaning and autoclave sterilization of all resusable components.

Steam Sterilization Parameter	Cycle # 1	Cycle # 2
Cycle Type	Pre-vacuum	Pre-vacuum
Preconditioning Pulses	4	4
Temperature	132 °C	134 °C
Exposure time	4 minutes	3 minutes
Dry time	30 minutes	30 minutes

8.3. Cleaning and Disinfection of the HEADSET

Follow the procedure below to clean and disinfect the **HEADSET**. All components must be thoroughly cleaned before initial use and after each subsequent use. None of the **HEADSET**'s components require disassembly prior to cleaning, except for the detachable pads and the battery socket.

There is a risk of **HEADSET** damage if the **HEADSET** is subjected to cleaning methods not approved by the manufacturer. To reduce the risk of loss of function and/or damage to the **HEADSET** use only the approved cleaning methods described below.

Caution: Do not attempt to sterilize any part of the **HEADSET**. Any attempt is likely to cause damage to the **HEADSET** and its components.

Note: Whenever possible, do not allow blood, debris, or any body fluids to dry on instruments. For best results, and to prolong the life of the **HEADSET**, process immediately after use.

Figure 43: Cleaning and Disinfection of the **HEADSET**

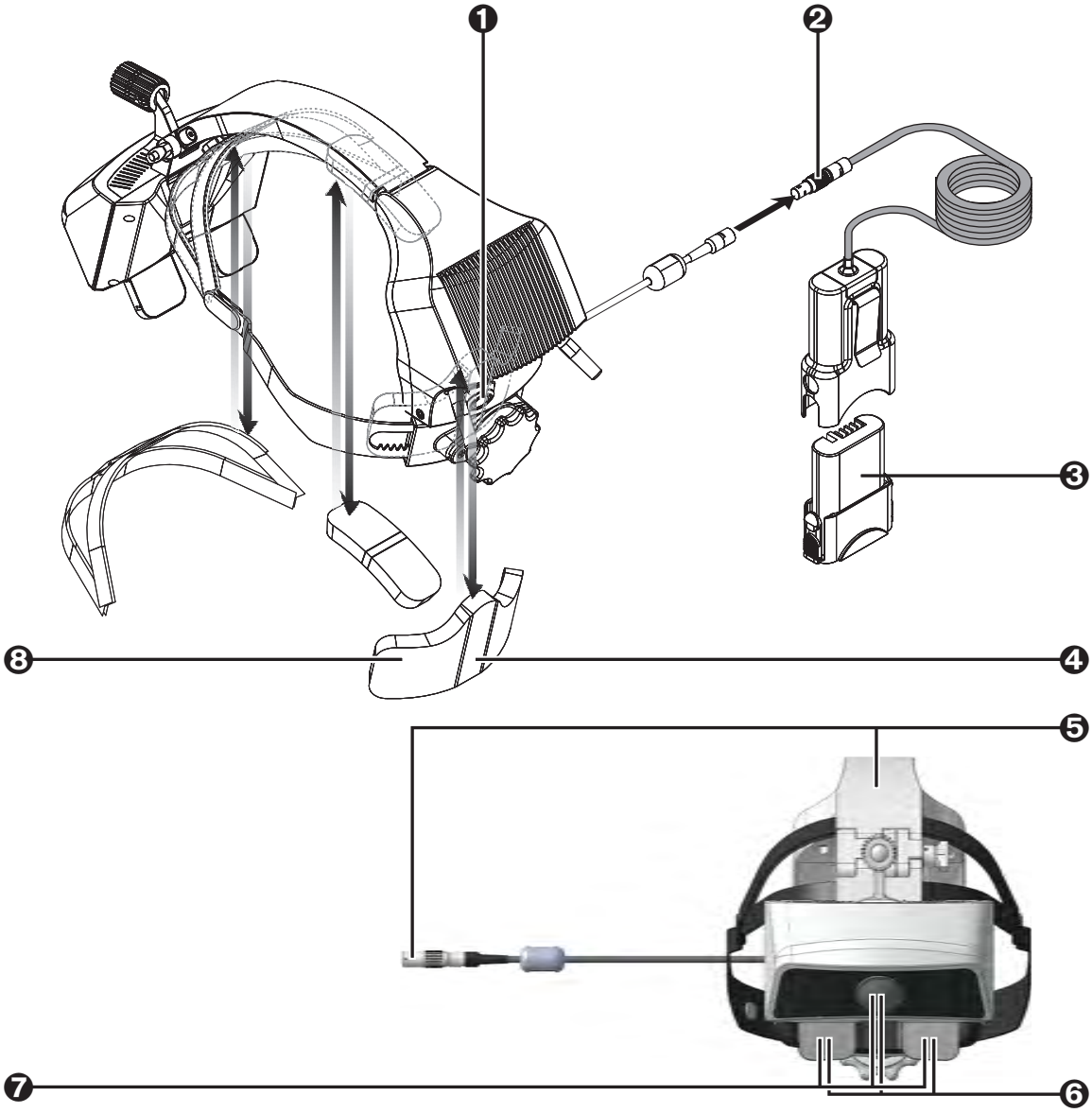

Follow the cleaning procedure below:

❶ Wearing disposable gloves, turn off the power switch of the **HEADSET**.
❷ Disconnect the battery socket from the **HEADSET**.
❸ Remove the battery. For more information see See *Battery and Charger* on page 4-3 for more information.
❹ Remove the three pads attached to the inner portion of the **HEADSET** and clean them with CaviWipes METREX™ to remove blood stains or other contaminants. Allow the pads to air dry.
❺ Hold the **HEADSET** in a way that the optical elements are vertical and facing down as shown, and clean all the surfaces of the **HEADSET** and the battery socket with CaviWipes METREX™.
❻ Carefully wipe the optical elements of the **HEADSET** (lenses and camera), as shown, with CaviWipes METREX™ to avoid smears or scratches. Leave the **HEADSET** to air dry for at least three minutes.
❼ Gently wipe the optical elements with a disposable lens cloth.
❽ Reattach the pads to the cleaned **HEADSET**.

Warning: Dispose the used wipes in accordance with Federal, State, and local regulations for infectious materials disposal.

Caution: Do not operate the system until the **HEADSET** is thoroughly dry.

When the cleaning and disinfection procedure is done return the **HEADSET** to its case.

9. Maintenance and Service

The **XVISION-SPINE** (**XVS**) system requires yearly maintenance. System calibration and updates are provided as required by service personnel. Service should only be provided by authorized Augmedics personnel.

9.1. Annual Headset Mechanical Maintenance

On an annual basis verify the mechanical functionality of the **HEADSET**, paying special attention to the following elements.

Figure 44: **HEADSET** Mechanical Maintenance

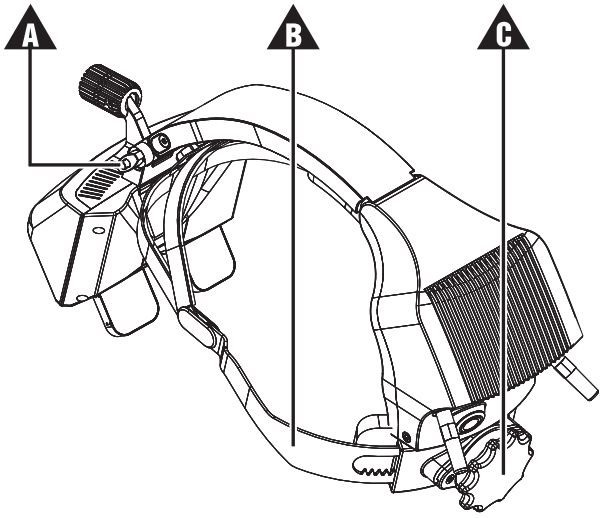

A Folding lock mechanism
B Head strap
C Head strap adjustment knob

1. Do a thorough visual inspection of the **HEADSET** and check the following:
   - Make sure that all of the enclosures are complete
   - Check that no cracks have developed
   - Verify that all screws are in place
   - Examine the pads to make sure that they do not need to be replaced
2. Check the folding lock mechanism (A) in all three states:
   - Float
   - Lock
   - Stow
3. Verify the functionality of of the head strap mechanism (B), including the adjustment knob (C).

If there are any problems with the mechanical functionality of the **HEADSET** contact Augmedics technical support.

9.2. Annual Headset Optical Maintenance

The luminance of the **HEADSET** lens assembly may decrease due to aging. The purpose of this annual maintenance test is to verify that the luminance of the display is within predefined specifications.

This test shall be performed in a dark room to avoid any effect on luminance due to external light according to DMR-XVS-SER-001 and documented accordingly.

Note: The test shall be performed by qualified personnel.

9.3. Annual Software Maintenance

When Augmedics is the supplier of the tablet or computer perform the following annual maintenance on the computer.

1. Open the Windows Event Viewer and look for intrusion events or cybersecuring events.
2. Run a cybercheck and verify that it complies to the hardening as defined by Augmedics.
3. Update the virus definition tables.

10. Troubleshooting

Message Area Warnings

Problem or Message	Result/Reason	Solution	Notes
No Navigation Display on Headset: MULTIPLE TOOLS	The system has detected more than one tool in the operating area (field of view)	Remove the tool that is not in use.	No image displayed on HEADSET
No Navigation Display on Headset: NO TOOL	The system cannot detect tool marker	Ensure tool marker is attached to tool/Ensure tool marker is not obstructed and is clean	
No Navigation Display on Headset: NO PATIENT MARKER	The system cannot detect patient reference marker	Ensure patient marker is attached to clamp/Ensure patient marker is clean	
No Navigation Display on Headset: XVISION Logo displayed	The Headset is not paired with the Interface software	Perform Headset pairing	
No Navigation Display on Headset: WAITING FOR START PROCEDURE	“Start Procedure” has not been selected in Interface software/Software version mismatch detected	Contact Service	
No Navigation Display on Headset: SYNCING	Headset is Initializing		
No Navigation Display on Headset: Hardware Problem Detected OR Hardware failure detected in…”	There is a problem with the Headset electronics.	Power off and on the Headset. If the problem persists, contact service.	
No Navigation Display on Headset:DISPLAY OFF	“Display Off” option was selected in the Interface software or footswitch.	Press again for Display ON	
No Navigation Display on Headset: DISPLAY OFF			
Scan Transfer Error:Less than 30 images	The scan transferred contains too few slices	Resend the scan	
Scan Transfer Error:Wrong UID	Scan transferred is corrupt	Resend the scan	
Scan Transfer Error:Image File is Not CT:	The scanner has been incorrectly configured and is transferring an unsupported modality.	Configure the scanner for CT_STORAGE	
Scan Transfer Error: Can't find a supported DICOM file	Folder that does not contain support images has been selected on USB stick		
"Low resources in … "	System problem	Power off and on the Headset. If the problem persists, contact service.	
"Application is low on resources"	System problem	Contact service.	

Message Area Warnings (continued)

Problem or Message	Result/Reason	Solution	Notes
Versions mismatch detected in …"	Software version mismatch detected	Contact Service	
"Pairing failed"	Communication problem	Try again or Power off and on the Headset. If the problem persists, contact service.	
"There are no network adapters with IPv4 enabled on the local system"	PC is not correctly configured	Contact Service	
"Registration Failed…"	Registration marker not detected	Make sure that the registration marker is correctly placed on the patient and in the scanner field of view and rescan. If the problem persists, contact service.	
"Error: Missing eye-screen calibration."	System problem	Contact Service	
"Xvision application is already running."	Previous instance was not closed correctly.	Reboot PC	
Calibration failed	Tool calibration failed for one of the reasons indicated	Follow instructions and repeat the process	If this problem persists with multiple tools contact service
Blue screen on computer monitor	Make sure all cables are connected properly.	If all cables are connected properly, shut down the system and contact service.	
Blurry or no image display	Lens and LCD are not clean	Gently wipe them using a lint-free soft cloth	Contact service if problem persists
Lens and/or LCD are scratched	Use another HEADSET.		
Projected display and reality are mixed	Insecure feeling due to mixed display of projected display and reality	Use another HEADSET.	Contact service if problem persists

HEADSET Troubleshooting

Problem or Message	Result/Reason	Solution
HEADSET not turning on	No power supply	• Make sure that the battery cord is attached properly. • Make sure that the battery is inserted fully and that the indicator is full.
HEADSET LED flashes light blue	**HEADSET** is initializing	Wait for flashing green.
HEADSET LED flashes slow green	**HEADSET** is connected to the **XVISION-SPINE**network (router) but not paired to the Workstation	Pair the **HEADSET**.
HEADSET LED solid green	**HEADSET** paired to the Workstation	NA
HEADSET flashes fast green.	**HEADSET** is trying to connect to the router.	Make sure that only one router is on and that it is configured according to the manufacturer's recommendations.
HEADSET LED red	Hardware problem	Try to restart the **HEADSET** several times. If this does not resolve the problem replace the **HEADSET** and contact service.
HEADSET LED purple	The user pressed the restart button for more than five seconds, putting the **HEADSET** into technician mode.	Turn off the **HEADSET** and restart it (pressing the restart button for one to two seconds only).

Appendix A: System Specifications

The specifications listed apply to system operation under typical conditions:

Environmental Conditions	
Operating Temperature	Between 10 °C and 30 °C
Electrical Safety	
Battery Specification	Battery operated 9-12 V
HEADSET Large Battery Pack	
Normal voltage	11.25V
Battery capacity	6400 mAh
Maximum charge current	4340 mA
Discharge current	1200 mA
HEADSET Small Battery Pack	
Normal voltage	11.25V
Battery capacity	2950 mAh
Maximum charge current	2065 mA
Discharge current	1200 mA
System Classifications	
Electrical Safety Classification (IEC 60601-1:2005+A1:2012)	Battery operated
Electromagnetic Emissions Compatibility, IEC 60601-1-2	Class A
HEADSET Water Ingress Classification	IPX0 (not protected)
HEADSET Rx/Tx	802.11g
HEADSET Frequency Range	2.4GHz
HEADSET Bandwidth	20MHz (802.11g
Footswitch Ingress Classification	IP68
All-In-One Computer dimensions	WxHxD: 606x398x65.6 mm
Tablet computer dimensions	WxHxD: 364.5x227x14.6
General	
Reusable Components	
Patient Clamp	Biocompatible (compliant with ISO 10993-1); Steam sterilized
Tool Marker Holder	Steam sterilized
Z-Marker	Steam sterilized
Sterile, Single Use Components	
Patient Marker	Dimensions: 64 mm X 64 mm X 8 mm, gamma sterilized
Tool Marker	Dimensions: 48 mm X 48 mm X 18 mm, gamma sterilized

Appendix B: Waste Electrical and Electronic Equipment

In accordance with Directive 2012/19/EU on Waste Electrical and Electronic Equipment (WEEE), any item which is marked with the crossed-out wheelie bin symbol must not be disposed of as unsorted municipal waste, but segregated from other waste types for eventual procedure and recovery at an approved recycling facility.

By returning waste electrical and electronic equipment via the correct segregated disposal channel, users can ensure the environmentally sound procedure and disposal of the waste equipment, thereby reducing the potential for any environmental or health risks that could arise as a result of incorrect disposal.

Appendix C: XVS Tool Adaptors

The **XVISION-SPINE** system includes XVS adaptors that are suitable for most surgical instruments.

Tool Name	Diameter
Swivel 7.5-9 mm Universal tool adaptor Leg Down	7.5 mm-9.0 mm
Swivel 7.5-9.0 mm universal tool adapter Leg up	7.5 mm-9.0 mm
Swivel 6-7.5mm universal tool adapter Leg up	6.0 mm-7.5 mm
Swivel 6-7.5mm universal tool adapter Leg Down	6.0 mm-7.5 mm
Swivel 5-6 mm universal tool adapter leg down	5.0 mm-6.0 mm
Swivel 5-6 mm universal tool adapter leg up	5.0 mm-6.0 mm
Swivel 4-5 mm universal tool adapter Leg up	4.0 mm-5.0 mm
Swivel 4-5 mm universal tool adapter Leg down	4.0 mm-5.0 mm
Fixed 3-4 mm Universal tool adaptor Leg Down	3.0 mm-4.2 mm
Fixed 3-4 mm Universal tool adaptor Leg Up	3.0 mm-4.2 mm
Navigated tool adaptor	NA
XVS VP adaptor	NA

Appendix D: XVS Patient Clamps

The **XVISION-SPINE** system includes XVS patient clamps.

Tool Name
XVS Short Straight Clamp (62 mm)
XVS Tall Straight Clamp (82 mm)
XVS Arc Clamp

Appendix E: Setting up the Medtronic O-arm 2 Scanner

Use the procedures below to set u the Medtronic O-arm 2 scanner.

E.1: Connecting Ethernet Cable to XVISION-SPINE

Plug one end of the Ethernet cable into the back of the O-arm 2 workstation (A) and connect the other end to any of the LAN ports 1 (1-4) (B) in the back of the **XVISION-SPINE** router.

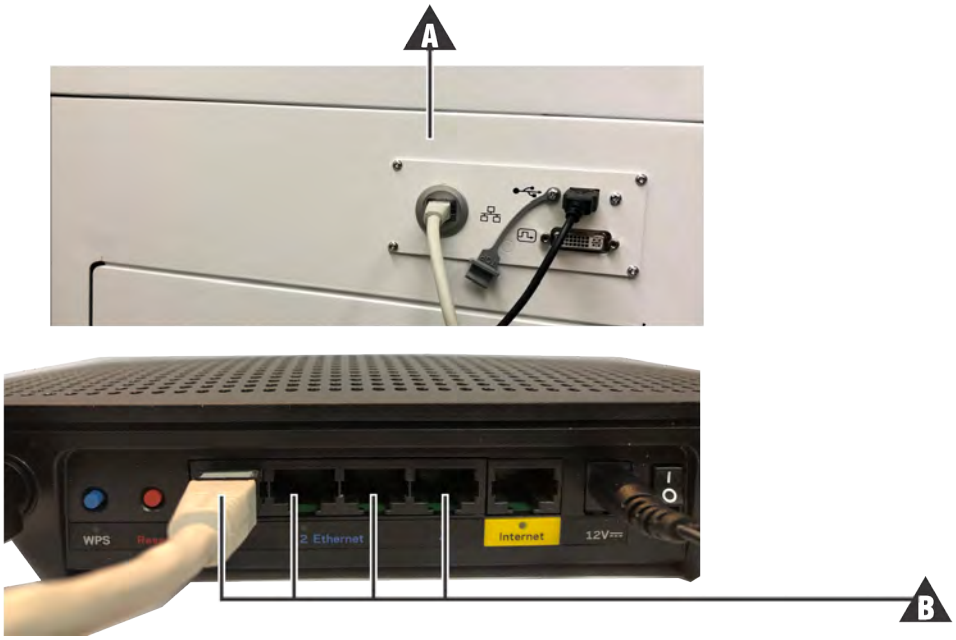

Note: Do not plug the Ethernet cable to the WAN port.

E.2: Setting IP Address

Use the procedure below to set the IP address.

1. Choose an existing study (A), select **Saved Exams** (B) and press **Send To...** (C)

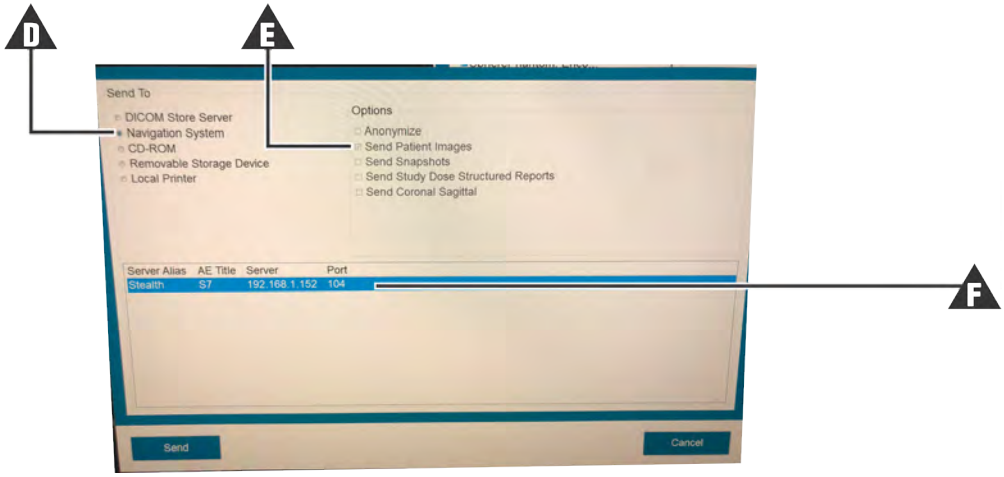

2. Press **Navigation System** (D) and **Send Patient Images** (E).
3. Copy **Stealth IP information** (F) into the **XVS SOFTWARE**. See *Configuring the Scanner Imaging Protocol* on page 5-6 for more information.

E.3: Imaging Settings

Configure imaging setting as follows:

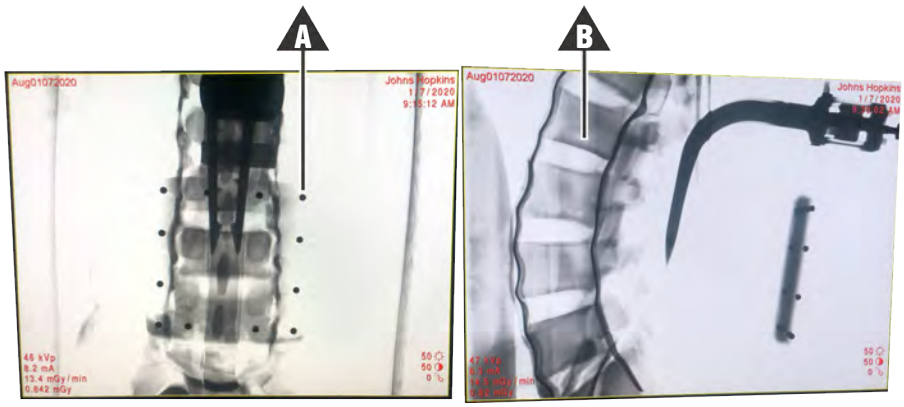

1. Ensure all beads of the Z-Marker (A) and anatomy (B) are in both axial and lateral scout shots.
2. Have the radiology tech make the following 3D settings prior to the 3D spin:
   - Always choose **HD**
   - Choose anatomy location
   - Choose patient size (only use Medium, Large or XL)
   - Choose patient positioning
   - Choose side O-arm in coming in from
   - Patient's breath must be held before scan
3. Scroll through 3D axial image and ensure all 12 beads of Z-Marker are visible, as in the figure below.

E.4: Sending Image to XVISION-SPINE

When the scan is complete press **ESC** to return to the menu.

1. Choose the current patient (A), press **Saved Exams** (B) and then press **Send To...** (C).

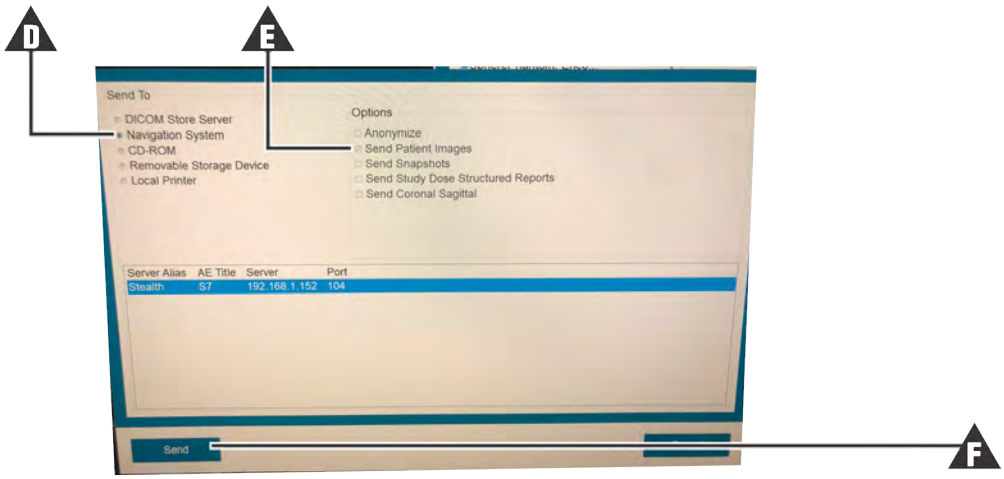

2. Press **Navigation System** (D), **Send Patient Images** (E) and then press **Send** (F).

Information is automatically sent to **XVS SOFTWARE**.

Appendix F: Setting up the Medtronic O-arm 1 Scanner

Use the procedures below to set u the Medtronic O-arm 2 scanner.

F.1: Connecting Ethernet Cable to XVISION-SPINE

Plug one end of the Ethernet cable into the back of the O-arm 1 workstation (A) and connect the other end to any of the LAN ports 1 (1-4) (B) in the back of the **XVISION-SPINE** router.

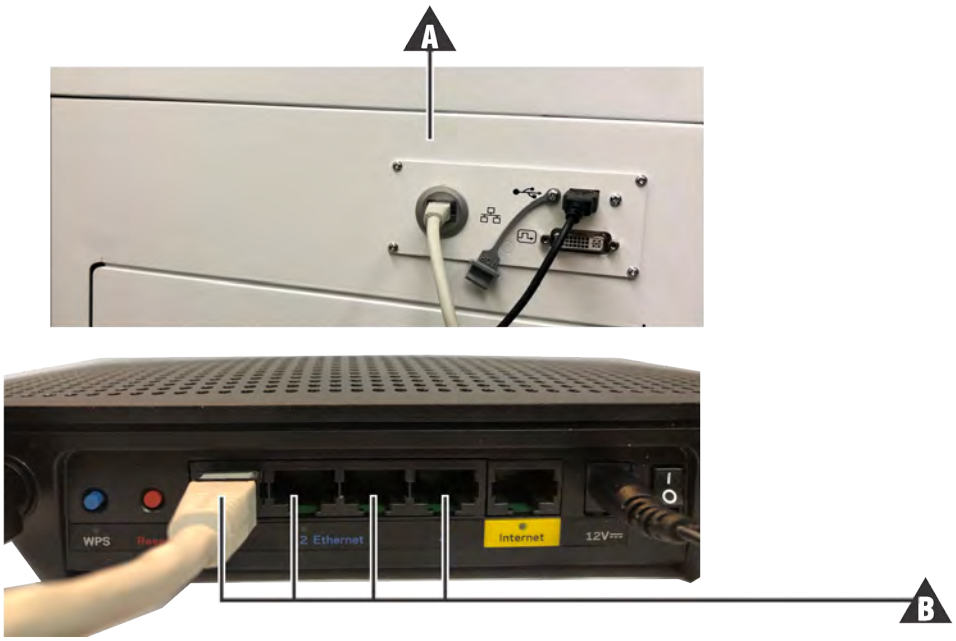

Note: Do not plug the Ethernet cable to the WAN port.

F.2: Setting IP address

Use the procedure below to set the IP address.

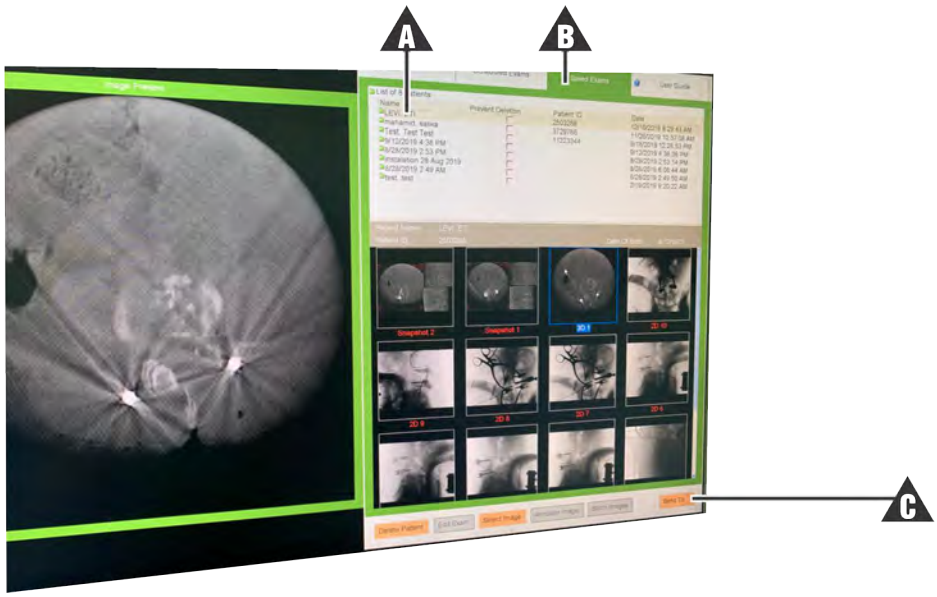

1. Choose an existing study (A), select **Saved Exams** (B) and press **Send To...** (C).

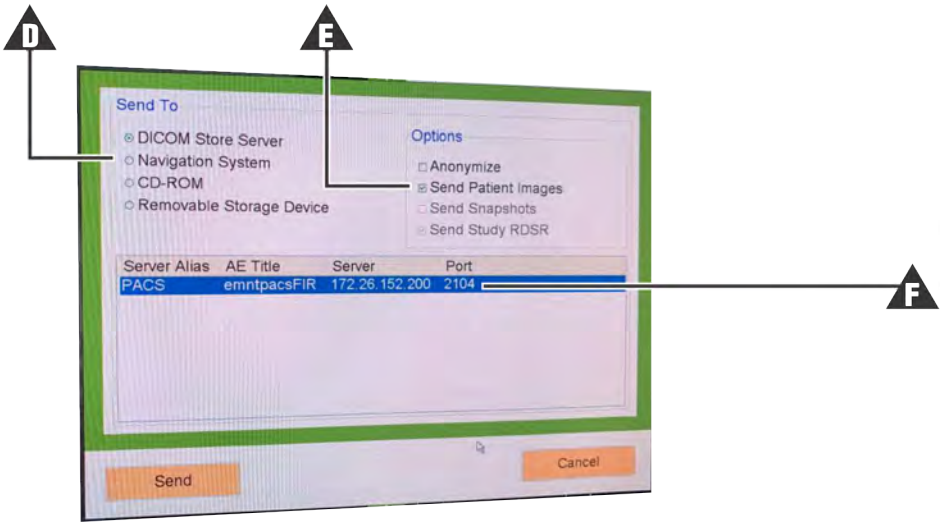

2. Press **DICOM Store Server** or **Navigation System** (D) and **Send Patient Images** (E).
3. Copy **Stealth IP information** (F) into the **XVS SOFTWARE**. See *Configuring the Scanner Imaging Protocol* on page 5-6 for more information.

F.3: Imaging Settings

Configure imaging setting as follows:

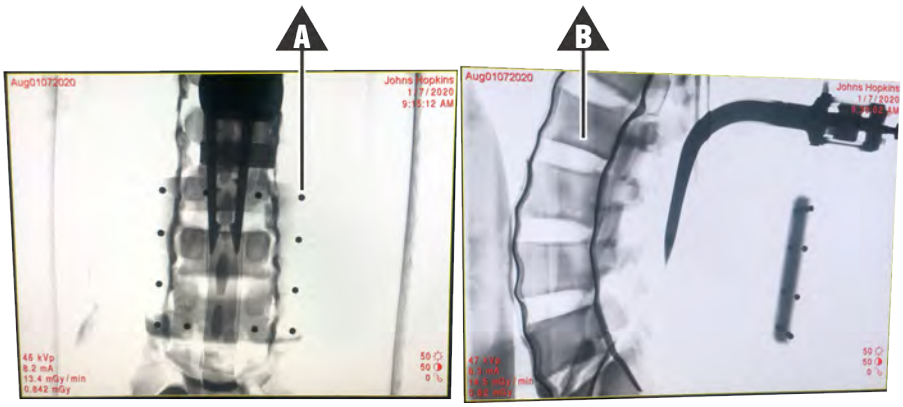

1. Ensure all beads of the Z-Marker (A) and anatomy (B) are in both axial and lateral scout shots.
2. Have the radiology tech make the following 3D settings prior to the 3D spin:
   - Always choose **HD**
   - Choose anatomy location
   - Choose patient size (only use Medium, Large or XL)
   - Choose patient positioning
   - Choose side O-arm in coming in from
   - Patient's breath must be held before scan
3. Scroll through 3D axial image and ensure all 12 beads of Z-Marker are visible, as in the figure below.

F.4: Sending Image to XVISION-SPINE

When the scan is complete press **ESC** to return to the menu.

1. Choose the current patient (A), press **Saved Exams** (B) and then press **Send To...** (C).

2. Press **Navigation System** (D), **Send Patient Images** (E) and then press **Send** (F).

Information is automatically sent to **XVS SOFTWARE**.

Appendix G: Setting up the Brainlab Airo Scanner

Use the procedures below to set up the Brainlab Airo scanner.

G.1: Connecting Ethernet Cable to XVISION-SPINE

Plug one end of the Ethernet cable into left NAV port in the back of the Brainlab Airo workstation (A) and connect the other end to any of the LAN ports 1 (1-4) (B) in the back of the **XVISION-SPINE** router.

Note: Do not plug the Ethernet cable to the WAN port.

G.2: Setting IP Address

Use the procedure below to set the IP address.

1. Choose an existing study (A) and press **Next** or **Export** (B).

2. Select the listed server (C) and then press **Send to DICOM Node** (D).

3. When the image transfer fails (E) an error message displays the IP information (F). Copy the IP address into the **XVS SOFTWARE**. See *Configuring the Scanner Imaging Protocol* on page 5-6 for more information.

G.3: Imaging Settings

1. Ensure that all beads of the ZLink and anatomy are in both axial and lateral scout shots.

Note: Because there is no monitor this is accomplished using hand control.

2. Have the radiology tech make the following 3D settings prior to the 3D spin:
   - Patient age and weight
   - Choose anatomy location
   - Scanner automatically sets scan parameters based on patient information
   - Patient's breath must be held before scan

3. Scroll through the 3D axial image (▲) and ensure that all 12 beads of the Z-Marker are in the image.

G.4: Sending Image to xvision-Spine

Information is sent automatically send to **XVS SOFTWARE** after the scan.

Note: Archived studies cannot be sent.

Appendix H: Setting up the Ziehm RFD 3D Scanner

Use the procedures below to set up the Ziehm RFD 3D scanner.

H.1: Connecting Ethernet Cable to XVISION-SPINE

Plug one end of the Ethernet cable back of the Ziehm monitor (A) and connect the other end to any of the LAN ports 1 (1-4) (B) in the back of the **XVISION-SPINE** router.

Note: Do not plug the Ethernet cable to the WAN port.

H.2: Setting IP address

A trained Ziehm employee or distributor must be on site to set up the IP address.

1. When this is done copy the IP address (A) into the **XVS SOFTWARE**. See *Configuring the Scanner Imaging Protocol* on page 5-6 for more information.

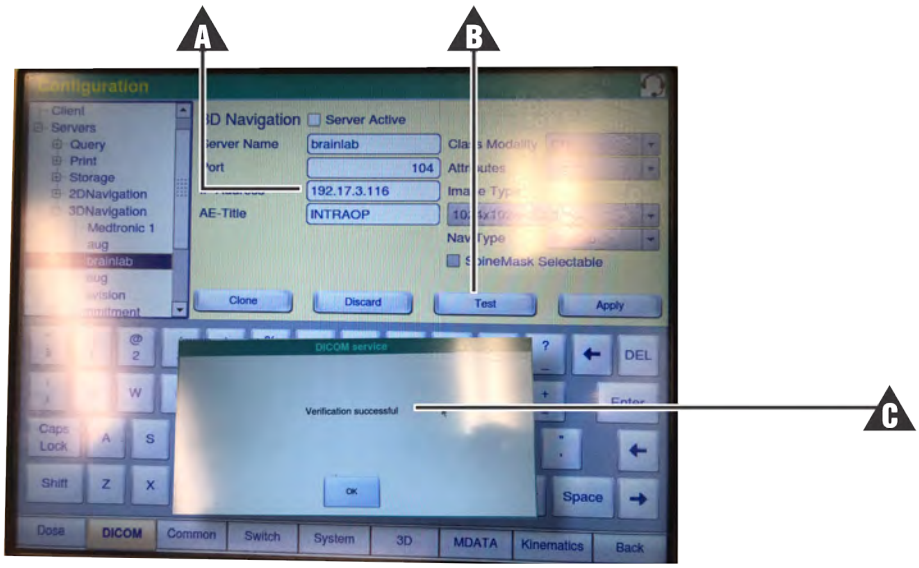

2. In the Ziehm console press **Test** (B). The **Verification Successful** window (C) indicates that the test has been completed.

H.3: Imaging Settings

Configure imaging setting as follows:

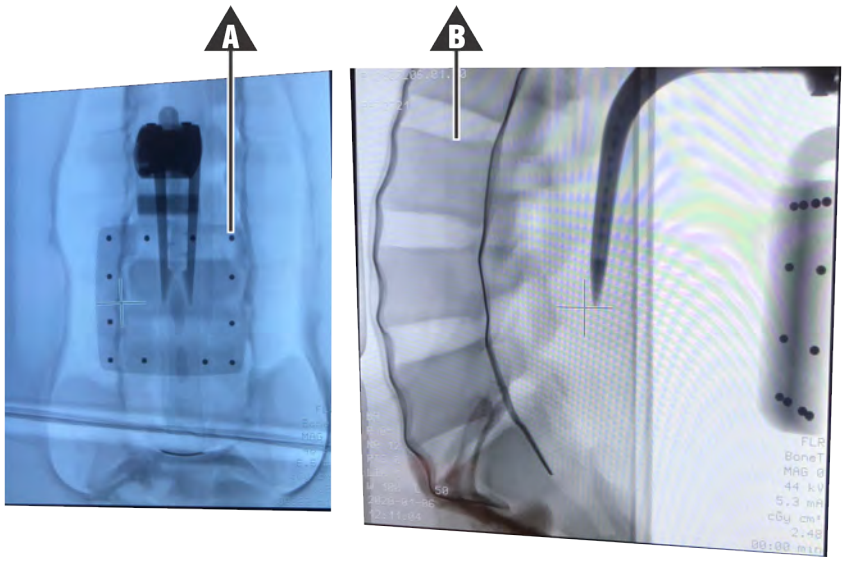

1. Ensure all beads of the Z-Marker (A) and anatomy (B) are in both axial and lateral scout shots.

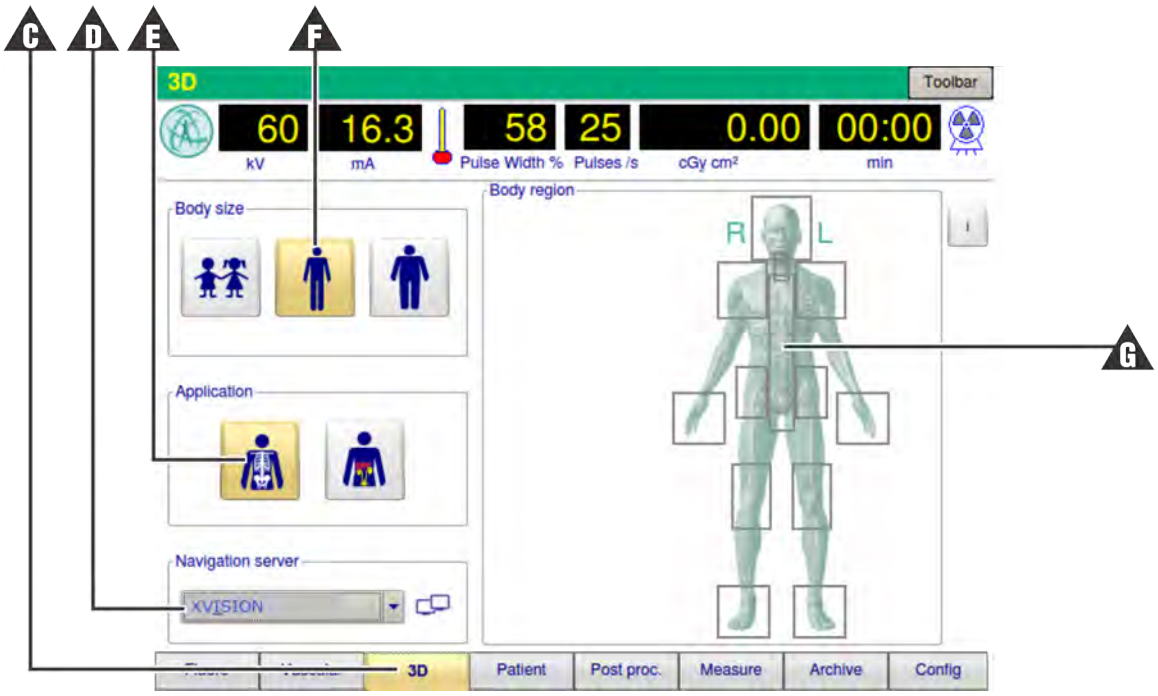

2. Have the radiology tech make the following 3D settings prior to the 3D spin:
   - **3D** (A)
   - Navigation Server: **XVision** (D)
   - Application: **Bone** (E)
   - Body Size: **Adult** (F)
   - Body region: **Spine** (G)
3. Follow the instructions and steps to perform a 3D scan. The scanner automatically sets the scan parameters based on patient information.

Note: Patient's breath must be held before the scan.

When the scan is complete scroll through the 3D axial image and ensure that all 12 beads of the Z-Marker are in the image.

H.4: Sending Image to xvision-Spine

The 3D images are sent automatically to the navigation system.

Note: If the data is not received by the navigation system, press **Navigation** on the right monitor of the monitor card of the C-arm. See the service manual for more information.

Appendix I: Setting up the Siemens Cios Spin Scanner

Use the procedures below to set up the Cios Spin scanner.

I.1: Connecting Ethernet Cable to XVISION-SPINE

Plug one end of the Ethernet the side of the Cios Spin workstation (A) and connect the other end to any of the LAN ports 1 (1-4) (B) in the back of the **XVISION-SPINE** router.

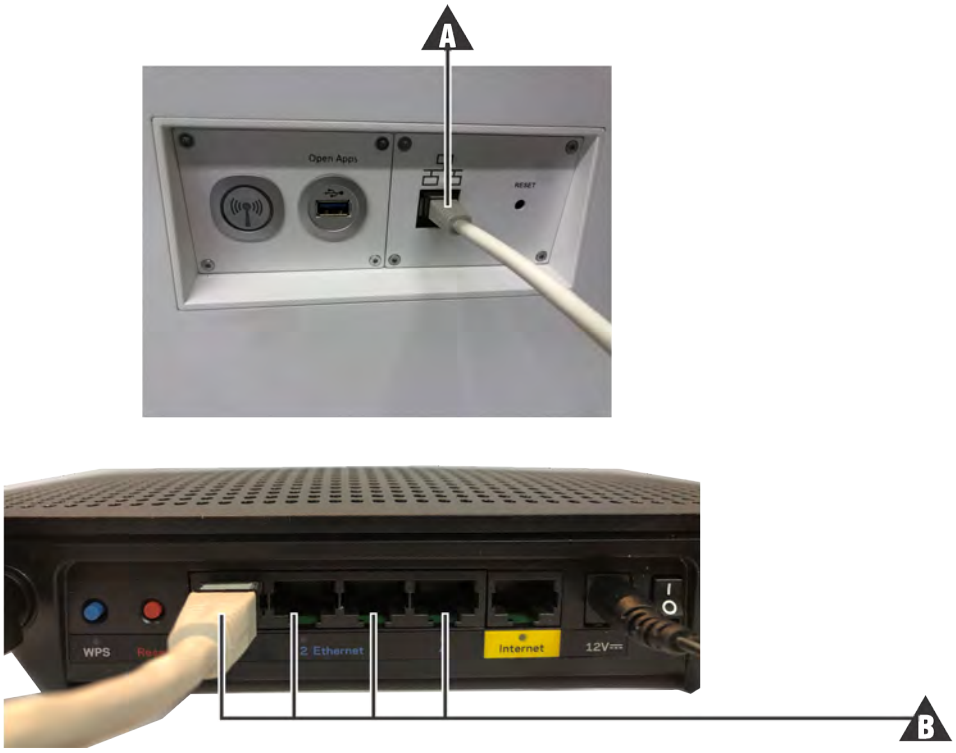

Note: Do not plug the Ethernet cable to the WAN port.

I.2: Setting IP Address

A Siemens representative must be on site to set up the IP address.

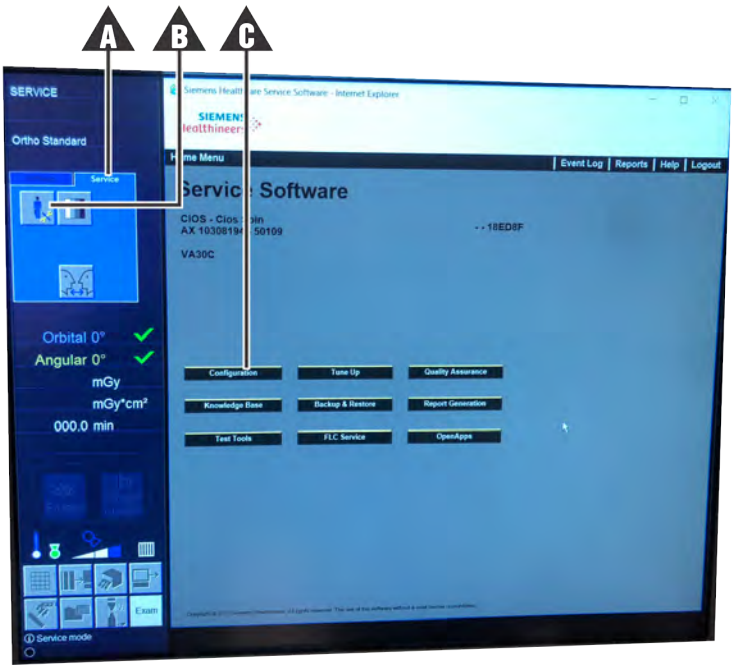

1. Choose **Service** tab (A) and the **Man/Tool box** icon (B). After the Siemens representative keys in the password press **Configure** (C).

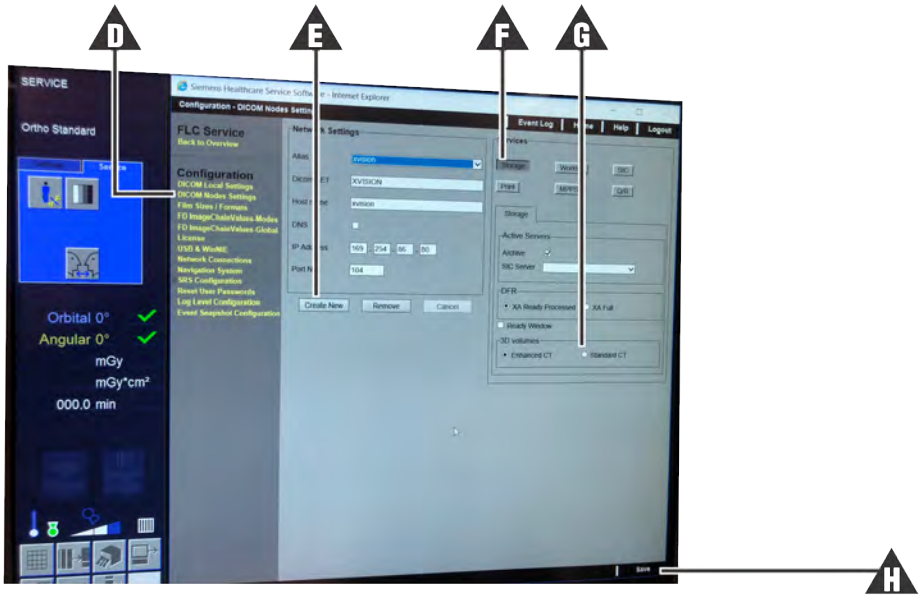

2. Press **DiICOM Node Settings** (D) and then **Create New** (E). The Siemens representative assigns the following information:
   - Server:
   - Port: 104
   - IP Address:
   - AE Title

3. Press **Storage Mode** (F) and then **Standard** (G) for 3D Volumes. Press **Save** (H).
4. Copy the Cios Spin IP information into the **XVS SOFTWARE**. See *Configuring the Scanner Imaging Protocol* on page 5-6 for more information.

I.3: Imaging Settings

Configure imaging setting as follows:

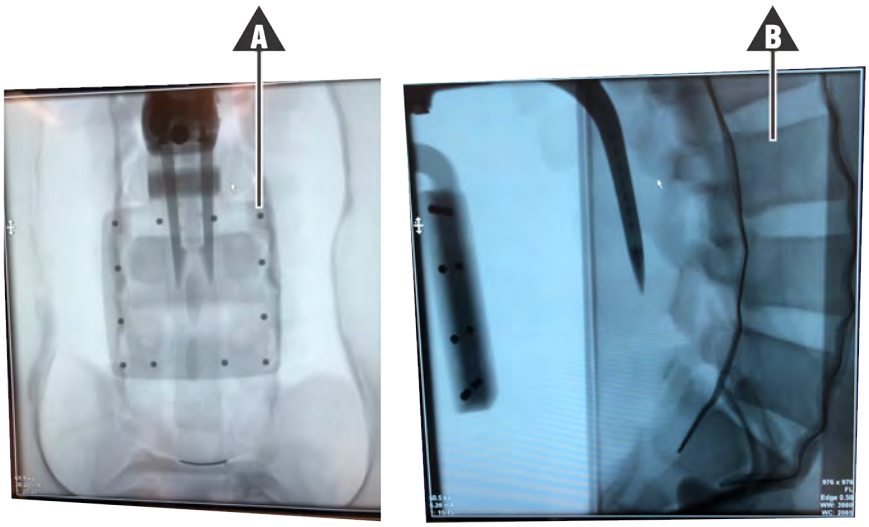

1. Ensure all beads of the Z-Marker (A) and anatomy (B) are in both axial and lateral scout shots.

2. Have the radiology tech make the following 3D settings prior to the 3D spin:
   - **Application Group** (C)
   - **High Quality** (D)
   - Choose patient positioning
   - Choose from which side C-arm comes
   - Patient's breath must be held before scan

3. Scroll through 3D axial image (E) and ensure that all 12 beads of the Z-Marker are visible.

I.4: Sending Image to XVISION-SPINE

After the scan is complete follow the procedure below.

1. Choose 2D on workstation (A), select axial 3D image (B) and then Export (C).

Note: A selected image has a white highlight. A marked image has a checkmark.

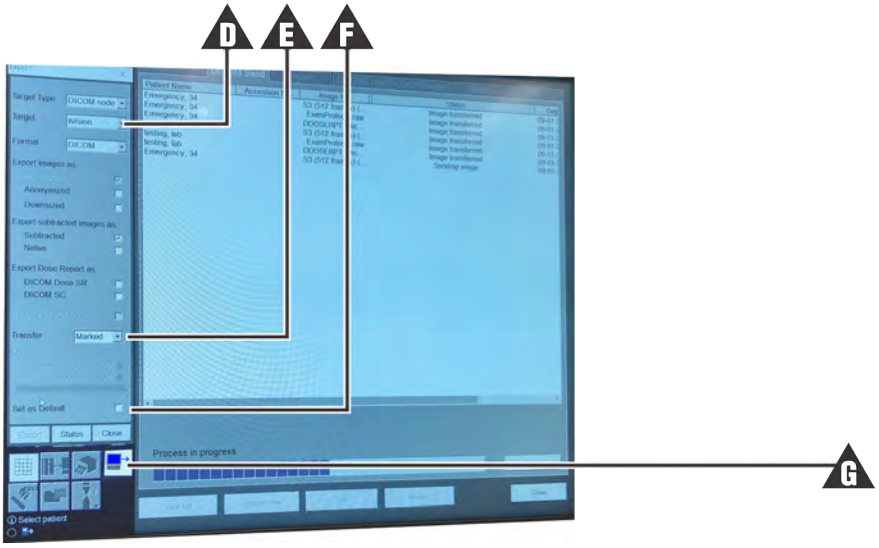

2. Set **Target** to **XVISION** (D), **Transfer** to **Selected** (E), and set this as default (F). The prest the Export icon (G).

Information is automatically sent to **XVS SOFTWARE**.

Appendix J: All-In-One Computer User Manual

TM-5010-24P/24F

Medical Panel PC

USER'S MANUAL

V1.1

Copyright© ,2018. All rights reserved

All other brand names are registered trademarks of their respective owners.

The information contained in this document is subject to change without notice

Version Change History

Date	Version	Description	Remark
2018/9/20	1.0	First release	Cosa
2018/11/05	1.1	Remove duplicate line p59	TP

i TM-5010-24P/24F User's manual

Acknowledgments

- Intel® 6th generation Core i and Celeron are registered trademarks of Intel® Corporation.
- IBM, PC/AT, PS/2 are trademarks of International Business Machines Corporation.
- Microsoft® Windows is a registered trademark of Microsoft® Corporation.
- RTL is a trademark of Realtek Semi-Conductor Co., Ltd.
- C&T is a trademark of Chips and Technologies, Inc.
- UMC is a trademark of United Microelectronics Corporation.
- ITE is a trademark of Integrated Technology Express, Inc.
- PS/2 is a trademark of International Business Machines Corporation.
- Intel is a trademark or registered trademark of Intel Corporation.
- Microsoft Windows is a registered trademark of Microsoft Corporation.
- Winbond is a registered trademark of Winbond Electronics Corporation.

All other product names or trademarks are properties of their respective owners.

FCC Class B

This equipment has been tested and found to comply with the limits for a Class B digital device, pursuant to Part 15 of the FCC Rules.
These limits are designed to provide reasonable protection against harmful interference when the equipment is operated in a residential environment. This equipment generates, uses and can radiate radio frequency energy. If not installed and used in accordance with this user manual, it may cause harmful interference to radio communications.
Note that even when this equipment is installed and used in accordance with this user manual, there is still no guarantee that interference will not occur. If this equipment is believed to be causing harmful interference to radio or television reception, this can be determined by turning the equipment on and off. If interference is occurring, the user is encouraged to try to correct the interference by one or more of the following measures:

- Reorient or relocate the receiving antenna
- Increase the separation between the equipment and the receiver
- Connect the equipment to a power outlet on a circuit different from that to which the receiver is connected
- Consult the dealer or an experienced radio/TV technician for help

Warning:
Any changes or modifications made to the equipment which are not expressly approved by the relevant standards authority could void your authority to operate the equipment.

To avoid risk of electric shock, this equipment must only be connected to a supply mains with protective earth.

Do not modify this equipment without authorization of the manufacturer.

Safety Instructions

Intended use

The TM-5010-24P/24F is intended to serve as a medical monitor which is designed for general purpose for hospital environment and for diagnosis. It could be used for Surgical, Radiology, PACS (Picture Archiving Communication Systems), LIS (Lab Information Systems) and Electronic Medical Record purpose. It shall not be used for life-supporting system.
WARNING: Critical diagnostic decision must not be based solely on images displayed by this device

Intended User profile

The equipment is intended for infant or adults by profession Health care professionals.

Greeting & Setup

Thank you for purchasing the TM-5010-24P/24F unit. We wish that this unit will be durable and reliable in providing your medical application needs. Please follow the instructions below to ensure the unit continues to have high performance.

Unpacking

After opening the carton, there will be a medical panel PC unit with an accessory box. Examine the contents to see if there are damages to the unit and if all accessories are present.

Setting up

Please read this manual carefully and remember to keep this manual for future reference.

Safety Instructions & Cleaning

The unit has undergone various tests in order to comply with safety standards. Inappropriate use of the open frame unit may be dangerous. Please remember to follow the instructions below to insure your safety during the installation and operating process.

Transporting & Placement of unit

1. When moving the unit on a cart; be very cautious. Quick stops, excessive forces and uneven surfaces may cause the cart to overturn thus risking the unit to fall to the ground.

2. If the medical panel PC unit does fall to the ground, immediately turn the power off and disconnect cords. Then contact a service technician for repairs. Continual use of the unit may result cause a fire or electric shock. Also, do not repair the unit on your own.
3. Having two or more people transporting the display unit is recommended. In addition, when installing the unit by suspending it also requires two or more people.
4. Before suspending the unit, make sure the material used for suspension is sturdy and stable. If not properly suspended, the display unit may fall and cause serious injury to people standing nearby as well as to the unit itself.
5. If you wish to mount the display unit, remember to use only the mounting hardware recommended by the manufacturer.

Electrical and Power Source Related

1. This medical panel PC unit must operate on a power source as shown on the specification label. If you are not sure what type of power supply used in the area, consult your dealer or local power supplier.
2. The power cords must not be damaged. Applied pressure, added heat, and tugging may damage the power cord.
3. The power cord must be routed properly when setup takes place. We advise that this aspect measure is to prevent people from stepping on the cords or while the unit is suspended to prevent flying objects from getting tangled with the unit.
4. For plug-in equipment, the power outlet socket must be located near the equipment and must be easily accessible.
5. Do not overload the AC outlets or extension cords. Electrical shocks or fires may occur from overloading.
6. Do not touch the power source during a thunderstorm.
7. If your hands are wet, do not touch the plug.

8. Use your thumb and index finger, grip firmly on the power cord to disconnect from the electrical socket. By pulling the power cord, may result in damaging it.
9. If the unit is not going to be in use for an extended period of time, remember to disconnect the unit.
10. The medical panel PC unit uses voltage between 100-240VAC. Connect the unit to a power source with the same numerical value as shown. Please use only the power cord provided by the dealer to ensure safety and EMC compliance.

Various Factors of Environment

1. Do not insert objects into the openings.
2. Do not have liquids seep into the internal areas of the medical panel PC unit.
3. Having liquids seep in or inserting objects into the unit may result in electric shocks from taking and/or short circuiting the internal parts.
4. Do not place the medical panel PC unit in the presence of high moisture areas.
5. Do not install the medical panel PC unit in a wet environment.
6. Do not place near unit near heat generating sources.
7. Do not place the unit in a location where it will come in contact with fumes or steam.
8. Remember to keep the medical panel PC unit away from the presence of dust.
9. If water has flow in or seep in, immediately disconnect the open frame unit. Then contact a service technician for repairs.

Ventilation Spacing

1. Do not cover or block the openings on the top and back sides of the display unit. Inadequate ventilation may cause overheating thus reducing the lifespan of the unit.

2. Unless proper ventilation is present, do not place unit in an enclosed area; such as a built-in shelf. Keep a minimum distance of 10 cm between the display unit and wall.

Operating principle

- A Medical Panel PC has four main components: the arithmetic logic unit (ALU), the control unit, the memory, and the input and output devices (collectively termed I/O). These parts are interconnected by buses, often made of groups of wires.
- The control unit, ALU, and registers are collectively known as a central processing unit (CPU).
- Inside each of these parts are thousands to trillions of small electrical circuits which can be turned off or on by means of an electronic switch. Each circuit represents a bit (binary digit) of information so that when the circuit is on it represents a "1", and when off it represents a "0" (in positive logic representation). The circuits are arranged in logic gates so that one or more of the circuits may control the state of one or more of the other circuits.

Cleaning the unit

1. Remember to turn off the power source and to unplug the cord from the outlet before cleaning the unit.
2. Carefully dismount the unit or bring the unit down from suspension to clean.
3. Please use a dry soft cloth to clean the unit.
4. Take a dry cloth and wipe the unit dry. Remember to avoid having liquids seep into the internal components and areas of the medical panel PC unit.

Error message / Troubleshooting

No power	1. Connect the AC adapter to the computer, and then plug it into an AC outlet. 2. Turn on the computer.

Servicing, Repairing, Maintenance & Safety Checks

1. If the unit is not functioning properly, observe the performance level of the display closely to determine what type of servicing is needed.
2. Do not attempt to repair the medical panel PC unit on your own. Disassembling the cover exposes users' to high voltages and other dangerous conditions. Notify and request a qualified service technician for servicing the unit.
3. To avoid risk of electric shock, this equipment must only be connected to a supply mains with protective earth.
4. If any of the following situations occur turn the power source off and unplug the unit. Then contact a qualified service technician.
   (a) A liquid was spilled on the unit or objects have fallen into the unit.
   (b) The unit is soaked with liquids.
   (c) The unit is dropped or damaged.
   (d) If smoke or strange odor is flowing out of the operating unit.
   (e) If the power cord or plug is damaged.
   (f) When the functions of the unit are dysfunctional.
5. When replacement parts are needed for the medical panel PC unit, make sure service technicians use replacement parts specified by the manufacturer, or those with the same characteristics and performance as the original parts. If unauthorized parts are used it may result in starting a fire, electrical shock and/or other dangers.

	ISO 7000-0434 : Caution, consult ACCOMPANYING DOCUMENTS.
	ISO 7000-1641 : Follow operating instructions or Consult instructions for use.
	IEC 60417 -5009 : STAND-BY.
	IEC 60417-5031 : Direct current.
	EU-wide legislation, as implemented in each Member State, requires that waste electrical and electronic products carrying the mark (left) must be disposed of separately from normal household waste. This includes monitors and electrical accessories, such as signal cables or power cords. When you need to dispose of your display products, please follow the guidance of your local authority, or ask the shop where you purchased the product, or if applicable, follow any agreements made between yourself. The mark on electrical and electronic products only applies to the current European Union Member States.

When networking with electrical devices, the operator is responsible for ensuring that the resulting system meets the requirements set forth by the following standards:

– EN 60601-1 (IEC 60601-1)
Medical electrical equipment
Part 1: General requirements for safety

– EN 60601-1-1 (IEC 60601-1-1)
Medical electrical equipment
Part 1-1: General requirements for safety
Collateral standard: Safety requirements for
Medical electrical systems

– EN 60601-1-2 (IEC 60601-1-2)
Medical electrical equipment
Part 1-2: General requirements for safety
Collateral standard: Electromagnetic compatibility;
Requirements and tests

CLASSIFIED C UL US
5AW4
E465187

MEDICAL - GENERAL MEDICAL EQUIPMENT
AS TO ELECTRICAL SHOCK, FIRE AND MECHANICAL
HAZARDS ONLY IN ACCORDANCE WITH ANSI/AAMI
ES 60601-1 (2005) + AMD (2012),
CAN/CSA-C22.2 No. 60601-1 (2008) + (2014)

Accessory equipment connected to the analog and digital interfaces must be in compliance with the respective nationally harmonized IEC standards (i.e. IEC 60950 for data processing equipment, IEC 60065 for video equipment, IEC 61010-1 for laboratory equipment, and IEC 60601-1 for medical equipment.) Furthermore all configurations shall comply with the system standard IEC 60601-1-1. Everybody who connects additional equipment to the signal input part or signal output part configures a medical system, and is therefore, responsible that the system complies with the requirements of the system standard IEC 60601-1-1. The unit is for exclusive interconnection with IEC 60601-1 certified equipment in the patient environment and IEC 60XXX certified equipment outside of the patient environment. If in doubt, consult the technical services department or your local representative.

Caution:
DO NOT LEAVE THIS EQUIPMENT IN AN UNCONTROLLED ENVIRONMENT WHERE THE STORAGE TEMPERATURE IS BELOW -20° C (-4° F) OR ABOVE 60° C (140° F). THIS MAY DAMAGE THE EQUIPMENT.

This equipment shall not be used in life support systems.

The user is not to touch SIP/SOPs and the patient at the same time.

Caution – Use suitable mounting apparatus to avoid risk of injury.

The sound pressure level at the operator's position according to IEC 704-1:1982 is no more than 70dB (A).

A) Grounding reliability can only be achieved when the equipment is connected to an equivalent receptacle marked "Hospital Only" or "Hospital Grade".
B) Use a power cord that matches the voltage of the power outlet, which has been approved and complies with the safety standard of your particular country.
C) Caution: This adapter Sinpro HPU180A-108 is a forming part of the medical device

Contact information:
TEGUAR Corporation
4235 South Stream Boulevard, Suite L-130 Charlotte, NC 28217 USA
TEL : +1 800 870 7715
Email:hotline@teguar.com