PHILIPS

Soundbar

**7000** Series

TAB7207

# User manual

Register your product and get support at
www.philips.com/support

# Contents


1 Important safety instructions 3

Safety 3
Care for your product 4
Care of the environment 4
Compliance 4
Help and support 4

2 Your Soundbar 6

What's in the box 6
Main unit 6
Connectors 7
Wireless Subwoofer 7
Remote control 8
Prepare the remote control 8
Placement 9
Wall mount 10

3 Connect 11

Dolby Audio 11
Connect to HDMI socket 11
Connect to Optical socket 12
Connect to AUX socket 12
Connect to power 13
Pair up with the subwoofer 13

4 Use your Soundbar 14

Turn ON and OFF 14
Select equalizer(EQ) effect 14
Adjust the volume 14
Factory reset 15
Bluetooth operation 16
USB operation 17
AUX / OPTICAL / HDMI ARC Operation 17

5 Product specifications 18

6 Troubleshooting 19

Trademarks: 21

# 1 Important safety instructions

Read and understand all instructions before you use your product. If damage is caused by failure to follow instructions, the warranty does not apply.

## Safety

### Risk of electric shock or fire!

- Before you make or change any connections, make sure that all devices are disconnected from the power outlet.
- Never expose the product and accessories to rain or water. Never place liquid containers, such as vases, near the product. If liquids are spilt on or into the product, disconnect it from the power outlet immediately. Contact Consumer Care to have the product checked before use.
- Never place the product and accessories near naked flames or other heat sources, including direct sunlight.
- Never insert objects into the ventilation slots or other openings on the product.
- Where the mains plug or an appliance coupler is used as the disconnect device, the disconnect device shall remain readily operable.
- Battery (battery pack or batteries installed) shall not be exposed to excessive heat such as sunshine, fire or the like.
- Disconnect the product from the power outlet before lightning storms.
- When you disconnect the power cord, always pull the plug, never the cable.
- Use the product in tropical and/or moderate climates.

### Risk of short circuit or fire!

- For identification and supply ratings, see the type plate at the back or bottom of the product.
- Before you connect the product to the power outlet, ensure that the power voltage matches the value printed on the back or bottom of the product. Never connect the product to the power outlet if the voltage is different.

### Risk of injury or damage to this product!

- For wall mounting, this product must be securely attached to the wall in accordance with the installation instructions. Use only the supplied wall mount bracket (if available). Improper wall mounting may result in accident, injury or damage. If you have any query, contact Consumer Care in your country.
- Never place the product or any objects on power cords or on other electrical equipment.
- If the product is transported in temperatures below 5°C, unpack the product and wait until its temperature matches room temperature before connecting it to the power outlet.
- Parts of this product can be made of glass. Handle with care to avoid injury and damage.
- Please use the product safely in an environment with temperature between 0°C and 40°C.

### Risk of overheating!

- Never install this product in a confined space. Always leave a space of at least four inches around the product for ventilation. Ensure curtains or other objects never cover the ventilation slots on the product.

### Risk of contamination!

- Do not mix batteries (old and new or carbon and alkaline , etc.).

- CAUTION: Danger of explosion if batteries are incorrectly replaced. Replace only with the same or equivalent type.
- Remove batteries if they are exhausted or if the remote control is not to be used for a long time.
- Batteries contain chemical substances, they should be disposed of properly.

This is CLASS II apparatus with double insulation, and no protective earth provided.

AC voltage

Follow the instructions in the user manual!

WARNING!
Warning: risk of electric shock!

The exclamatory mark is intended to alert the user to the presence of important operating instructions.

Note

- The rating label is pasted on the bottom or back of the equipment.

# Care for your product

Use only microfiber cloth to clean the product.

# Care of the environment

## Disposal of your old product and battery

Your product is designed and manufactured with high quality materials and components, which can be recycled and reused.

This symbol on a product means that the product is covered by European Directive 2012/19/EU.

This symbol means that the product contains batteries covered by European Directive 2013/56/EU which cannot be disposed of with normal household waste.

Inform yourself about the local separate collection system for electrical and electronic products and batteries.
Follow local rules and never dispose of the product and batteries with normal household waste. Correct disposal of old products and batteries helps prevent negative consequences for the environment and human health.

## Removing the disposable batteries

To remove the disposable batteries, see battery installation section.

# Declaration of conformity

This product complies with the radio interference requirements of the European community.
Hereby, MMD Hong Kong Holding Limited declares that the product is in compliance with the essential requirements and other relevant provisions of RED Directive 2014/53/EU and UK Radio Equipment Regulations SI 2017 No 1206. You can find the Declaration of Conformity on www.philips.com/support.

# Help and support

For extensive online support, visit www.philips.com/support to:

- download the user manual and the quick start guide
- watch video tutorials (available only for selected models)

- find answers to frequently answered questions (FAQs)
- email us a question
- chat with our support representative.

Follow the instructions on the website to select your language, and then enter your product model number.

Alternatively, you can contact Consumer Care in your country. Before you contact, note down the model number and serial number of your product. You can find this information on the back or bottom of your product.

## FCC information

**NOTE:** This equipment has been tested and found to comply with the limits for a Class B digital device, pursuant to Part 15 of the FCC Rules. These limits are designed to provide reasonable protection against harmful interference in a residential installation. This equipment generates, uses and can radiate radio frequency energy and, if not installed and used in accordance with the instructions, may cause harmful interference to radio communications.

However, there is no guarantee that interference will not occur in a particular installation. If this equipment does cause harmful interference to radio or television reception, which can be determined by turning the equipment off and on, the user is encouraged to try to correct the interference by one or more of the following measures:

- Reorient or relocate the receiving antenna.
- Increase the separation between the equipment and receiver.
- Connect the equipment into an outlet on a circuit different from that to which the receiver is connected.
- Consult the dealer or an experienced radio / TV technician for help.

## FCC&IC Warning:

- This equipment should be installed and operated with minimum distance 20cm between the radiator & your body.
- Changes or modifications to this unit not expressly approved by the party responsible for compliance could void the user's authority to operate the equipment.

## IC-Canada: CAN ICAN ICES-003(B) / NMB-003(B)

This device contains licence-exempt transmitter(s) / receiver(s) that comply with Innovation, Science and Economic Development Canada's licence-exempt RSS(s). Operation is subject to the following two conditions:

1. This device may not cause interference.
2. This device must accept any interference, including interference that may cause undesired operation of the device.

## Avis d'Industrie Canada: CAN ICES-003(B)/NMB-003(B)

L'émetteur/récepteur exempt de licence contenu dans le présent appareil est conforme aux CNR d'Innovation, Sciences et Développement économique Canada applicables aux appareils radio exempts de licence. L'exploitation est autorisée aux deux conditions suivantes :

1. L'appareil ne doit pas produire de brouillage;
2. L'appareil doit accepter tout brouillage radioélectrique subi, même si le brouillage est susceptible d'en compromettre le fonctionnement.

# 2 Your Soundbar

Congratulations on your purchase, and welcome to Philips! To fully benefit from the support that philips offers,register your soundbar at www.philips.com/support.

## What's in the box

Check and identify the items in the package:

- Soundbar x 1
- Wireless subwoofer x 1
- Remote control x 1
- Power cord (Subwoofer) x 2
  Power cord(soundbar) x 2
- Wall mount kit x 1
- Quick start guide x 1
- Warranty card x 1
- Safety sheet x 1
- Wall mount template x 1

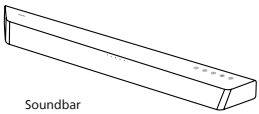

Soundbar

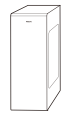

Wireless subwoofer

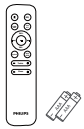

Remote control
(AAA batteries x 2)

Wall mount kit
(brackets x2 / wall mounting screws x2 / wall anchors x2)

Power cords *
Bar (UK&EU): x2pcs
Subwoofer(UK&EU)x2pcs

Quick Start Guide

Warranty Card

Safety Sheet

Wall mount template

- Power cord quantity and plug type vary by regions.
- Images, illustrations and drawings shown on this User Manual are for reference only, actual product may vary in appearance.

## Main unit

This section includes an overview of the main unit.

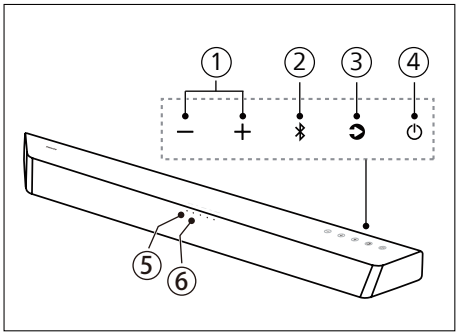


① **+/- (Volume)** button
Increase or decrease volume.

② ✱ button
One press will switch to BT source.
Long press will trigger Bluetooth Pairing in BT source

③ ➲ **(Source)**
Select an input source for the Soundbar. Default source is HDMI ARC.

④ ⏻ **(Standby-On)** button
- Switch the soundbar On or to standby.

⑤ **Soundbar's LED indicator**
Switch the playback source and the front indicator lights up accordingly. The indicator light on the front of the main unit will show which mode is currently in use.

| Status | LED state |
|---|---|
| **AUX** | [AUX/USB] Solid white |
| **USB** | [AUX/USB] Blinking white |
| **Standby** | [Standby] Solid red |
| **BT** (Bluetooth)<br>• Connected<br>• Connection | <br>[BT] Solid white<br>[BT] Blinking white |
| **OPTICAL** | [OPTICAL] Solid white |
| **HDMIARC** | [HDMIARC] Solid white |

⑥ **Remote control sensor**

## Connectors

This section includes an overview of the connectors available on your soundbar.

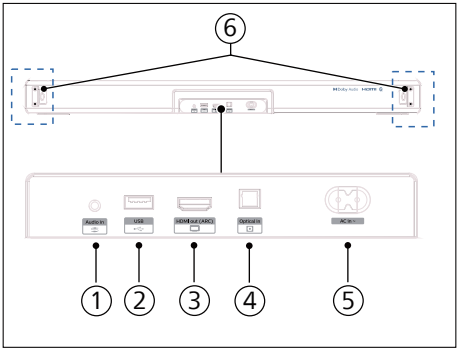


① **Audio in**
Audio input from, for example, an MP3 player (3.5mm jack).

② **USB**
- Connect to a USB storage device for audio media play.
- Upgrade software of this product.

③ **HDMI out (ARC) Socket**
Connect to the HDMI (ARC) input on the TV.

④ **Optical in**
Connect to an optical audio output on the TV or a digital device.

⑤ **AC ~** Socket
Connect to the power supply.

⑥ **Wall bracket screws.**

## Wireless Subwoofer

This section includes an overview of the Wireless subwoofer.

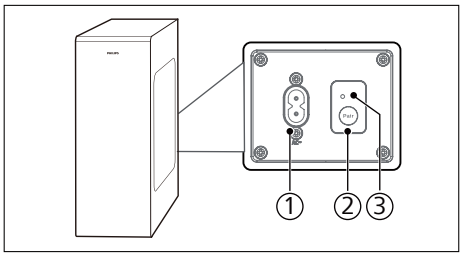


① **AC~ Socket**
Connect to the power supply.

② **Pair button**
Press and hold to enter the pairing mode for the subwoofer.

③ **Subwoofer indicator**
Determine the status based on the wireless subwoofer indicator.

| LED State | Status |
|---|---|
| Fast blink | Subwoofer in pairing mode |
| Constant on | Connected / Pairing successful |
| Slow blink | Connection / Pairing Failed |

# Remote control

This section includes an overview of the remote control.

① ⏻ (Standby-On ) button
- Switch the soundbar On or to standby.

② **EQ** (Mode )
There are four EQ modes in our Soundbar,movie,music,voice,stadium.

③ **HDMI ARC**
Switch your source to HDMI ARC connection.

④ **BT / Pair**
Switch to Bluetooth mode.
paired list not empty, reconnect to the last device (connectable, 10s timed out and entered pairing mode)
Press 3s disconnect all BT devices and enter pairing mode.

⑤ ⏮ / ⏭ (Previous / Next)
Skip to the previous or next track in USB/ BT mode.

▶II (Play/Pause)
Start, pause or resume play in USB/ BT mode

**VOL+/VOL-** (system Volume)
Increase /decrease system volume level

⑥ **OPTICAL**
Switch your audio source to the optical connection.

⑦ **AUX/USB :**
Switch your audio source to the AUX/USB connection.

AUX source selected White Constant, USB source selected White Flashing

⑧ **- TREBLE**
decrease the soundbar's treble volume.

⑨ **+ TREBLE**
Increase the soundbar's treble volume.

⑩ **- BASS**
decrease the subwoofer's volume.

⑪ **+ BASS**
Increase the subwoofer's volume.

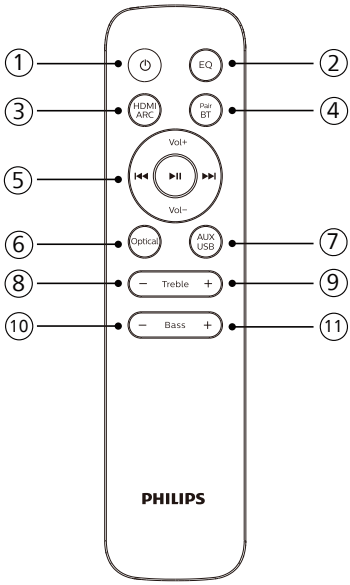


# Prepare the remote control

- The provided remote control allows the unit to be operated from a distance.
- Even if the remote control is operated within the effective range 19.7 feet (6m), remote control operation may be impossible if there are any obstacles between the unit and the remote control.
- If the remote control is operated near other products which generate infrared rays, or if other remote control devices using infra-red rays are used near the unit, it may operate incorrectly. Conversely, the other products may operate incorrectly.

## Replace the remote control battery

Slide to remove the battery compartment cover, insert 2 AAA batteries (1.5V) with correct polarity, then slide the battery compartment cover back into position.

- Make sure the (+) and (–) ends of the batteries match the (+) and (–) ends indicated in the battery compartment.

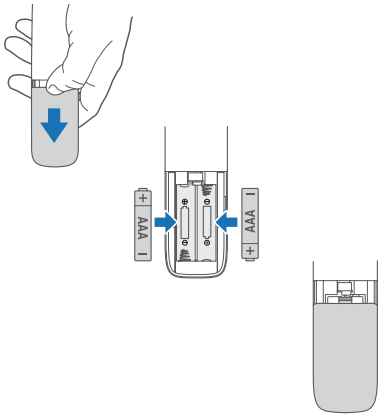


## Precautions Concerning Batteries

- Be sure to insert the batteries with correct positive "⊕" and negative ⊖" polarities.
- Use batteries of the same type. Never use different types of batteries together.
- Either rechargeable or non-rechargeable batteries can be used. Refer to the precautions on their labels.
- Be aware of your fingernails when removing the battery cover and the battery.
- Do not drop the remote control.
- Do not allow anything to impact the remote control.
- Do not spill water or any liquid on the remote control.
- Do not place the remote control on a wet object.
- Do not place the remote control under direct sunlight or near sources of excessive heat.
- Remove the battery from the remote control when not in use for a long period of time, as corrosion or battery leakage may occur and result in physical injury, and/or property damage, and/or fire.
- Do not use any batteries other than those specified.
- Do not mix new batteries with old ones.
- Never recharge a battery unless it is confirmed to be a rechargeable type.

# Placement

Place the Subwoofer at least 1 meter (3 feet) away from your Soundbar, and ten centimeters away from the wall.

For best results, place your Subwoofer as shown below.

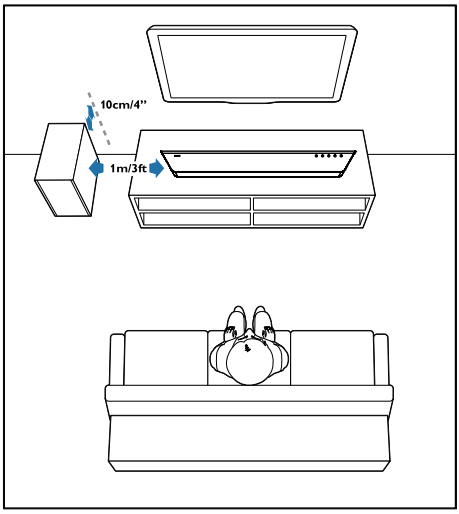

# Wall mount

Note

- Improper wall mounting may result in accident, injury or damage. If you have any query, contact Consumer Care in your country.
- Before wall mounting, make sure the wall can support the weight of your soundbar.
- Before wall mounting , you need not remove the rubber feet at the bottom of the soundbar, otherwise the rubber feet cannot be fixed back.
- Depending on the type of wall mounting your soundbar, make sure that you use screws of a suitable length and diameter.
- Please check whether the USB port on the back of the soundbar is connected to a USB device. If it is found that the connected USB device affects the wall-mount, you need to use another USB device of the appropriate size.

## Screw length/diameter

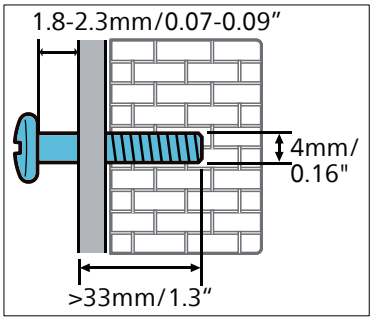


## Suggested wall mounting height

You are recommended to install the TV first before wall mounting the soundbar. With a TV preinstalled, wall mount the soundbar 50mm/2.0’’ in distance from the bottom of the TV.

WARNING!

- To prevent injury, this apparatus must be securely attached to the floor/wall in accordance with the installation instructions.
- Suggested wall mounting height: ≤ 1.5 meters.

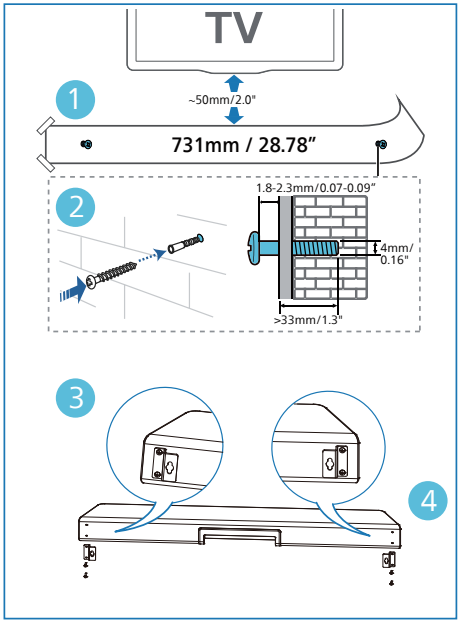


1 Drill 2 parallel holes ( diameter 3-8mm each according to wall type) on the wall.
   ↳ The distance between the holes are: **731mm / 28.78”**
   ↳ You can use the wall mount template provided for helping the drilling holes position on the wall.

2 Secure the dowels and screws in the holes.
   ↳ Be sure to leave a **1.8-2.3mm** gap between the wall and the screw’s head.

3 Attach the wall brackets (x2) into the back of the unit.

4 Hang the soundbar on the fastening screws.

# 3 Connect

This section helps you connect your soundbar to a TV and other devices, and then set it up.

For information about the basic connections of your soundbar and accessories, see the quick start guide.

**Note**

- For identification and supply ratings, see the type plate at the back or bottom of the product.
- Before you make or change any connections, make sure that all devices are disconnected from the power outlet.

## Dolby Audio-Dolby Digital Plus

Dolby Audio-Dolby Digital Plus gives the new surround listening experience. For more information, please visit dolby.com

**For using Dolby Audio-Dolby Digital Plus**

Dolby Audio-Dolby Digital Plus is available in HDMI-ARC mode. For the details of the connection, please refer to “HDMI-ARC Connection”

1 To use Dolby Audio-Dolby Digital Plus in HDMI-ARC mode, your TV has to support Dolby Audio-Dolby Digital Plus .

2 Make sure that “No Encoding” is selected for bitstream in the digital audio output of the connected external device (e.g. Blu-ray DVD player, TV etc.).

**Note**

- The Dolby Audio-Dolby Digital Plus experience is only available when the soundbar is connected to the HDMI-ARC source via a HDMI cable above 1.4 .
- The soundbar will still function when connected via other methods (such as a Digital Optical cable) , but these are unable to support all of the Dolby Audio-Dolby Digital Plus features. Given this, our recommendation is to connect via HDMI, in order to ensure full Dolby Audio support.

## Connect to HDMI ARC

Your Soundbar supports HDMI with Audio Return Channel (ARC). If your TV is HDMI ARC compliant, you can hear the TV audio through your Soundbar by using a single HDMI cable.

1 On your TV, turn on HDMI-CEC operations. For details, see the TV user manual.

The **HDMI ARC** connector on the TV might be labeled differently. For details, see the TV user manual.

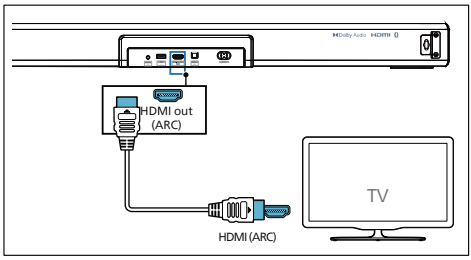

**2** Using a High Speed HDMI cable, connect the **HDMI ARC** connector on your Soundbar to the **HDMI ARC** connector on the TV.

**HDMI CEC:** the CEC function of HDMI supports and the following,
remote control through event system
audio control (standby required)

**Note**

- Your TV must support the HDMI-CEC and ARC function. HDMI-CEC and ARC must be set to On.
- The setting method of HDMI-CEC and ARC may differ depending on the TV. For details about ARC function, please refer to your TV owner's manual.
- Make sure to use the HDMI cables can support the ARC function.

## Connect to Optical Socket

- Using an optical cable, connect the **Optical** connector on your soundbar to the **Optical out** connector on the TV or other device.

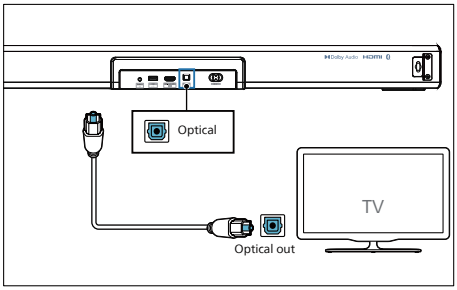


- The digital optical connector might be labeled **Spdif** or **Spdif out**.

## Connect to AUX Socket

- Use a 3.5mm to 3.5mm audio cable to connect the TV's headphone socket to the AUX socket on the unit.

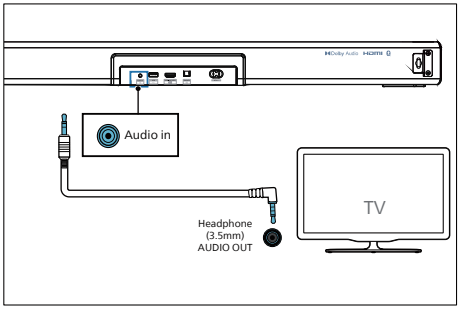


- Use a RCA to 3.5mm audio cable to connect the TV's audio output sockets to the AUX socket on the unit.

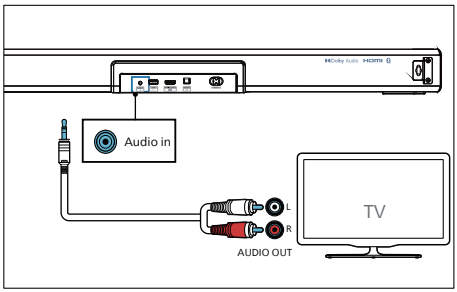

# Connect to Power

- Before connecting the AC power cord, ensure you have completed all other connections.
- Risk of product damage! Ensure that the power supply voltage corresponds to the voltage printed on the back or the underside of the unit.

1 Connect the mains cable to the **AC~** socket of the unit and then into a mains socket.

2 Connect the mains cable to the **AC~** socket of the Subwoofer and then into a mains socket.

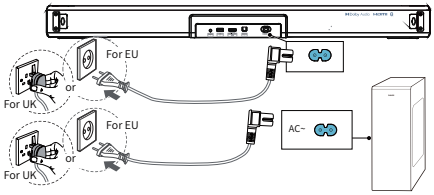


* Power cord quantity and plug type vary by regions.

# Pair up with the Subwoofer

## Automatic Pairing

Plug the Soundbar and the Subwoofer into the mains sockets and then press on the unit or remote control to switch the unit to **ON** mode. The Subwoofer and Soundbar will automatically pair.

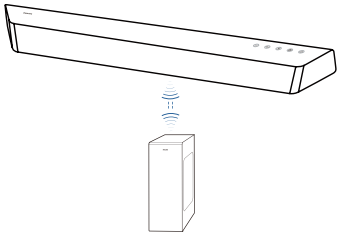

↳ Determine the status based on the wireless Subwoofer indicator.

| LED State | Status |
|---|---|
| Fast blink | Subwoofer in pairing mode |
| Constant on | Connected / Pairing successful |
| Slow blink | Connection / Pairing Failed |

Tis

- Do not press Pair button on the rear of the Subwoofer, except for manual pairing.

## Manual Pairing

If no audio from the wireless Subwoofer can be heard, manually pair up the Subwoofer.

1 Unplug both power cable of subwoofer and soundbar, then plug them in again after 3 minutes.

2 Press and hold the **Pair** button on the rear of the Subwoofer for 5 seconds.
The Pair indicator on the Subwoofer will rapidly blink.

3 Press ⏻ on the soundbar or remote control to switch the soundbar to enter pairing mode automatically.

4 The **Pair** indicator on the Subwoofer will become solid in orange when successful.

5 If the Pair indicator still keeps blinking, repeat step 1-3.

Tips

- The Subwoofer should be within 6 m of the Soundbar in an open area (the closer the better).
- Remove any objects between the Subwoofer and the Soundbar.
- If the wireless connection fails again, check if there is a conflict or strong interference (e. g. interference from an electronic device) around the location. Remove these conflicts or strong interferences and repeat the above procedures.

# 4 Use your Soundbar

This section helps you use the Soundbar to play audio from connected devices.

**Before you start**

- Make the necessary connections described in the quick start guide and the user manual.
- Switch the Soundbar to the correct source for other devices.

## Turn ON and OFF

- When you first connect the unit to the main socket, the unit will be in STANDBY mode. The Standby indicator will light up.
- Press the ⏻ button on the remote control or on the main unit to switch the main unit ON or OFF.
- Disconnect the main plug from the main socket if you want to switch the unit off completely.

### Auto Standby

The unit automatically turns to Standby mode after about 15 minutes if the TV or the external unit is disconnected, switched off.

- To switch the unit off completely, remove the mains plug from the mains socket.
- Please turn the unit off completely to save energy when not in use.

## Select Source

1 Press the button repeatedly on the unit or press the **AUX** , **OPTICAL** , **HDMI ARC** , **Pair/BT** , **USB** buttons on the remote control to select the desired mode.

The indicator light on the Soundbar will show which mode is currently in use.

| Status | LED State |
|---|---|
| **AUX** | [AUX/USB] Solid white |
| **USB** | [AUX/USB] Blinking white |
| **Standby** | [Standby] Solid red |
| **Pair/BT**<br>· Connected<br>· Connection | <br>[BT] Solid white<br>[BT] Blinking white |
| **OPTICAL** | [OPTICAL] Solid white |
| **HDMI ARC** | [HDMI ARC] Solid white |

## Select Equalizer (EQ) Effect

Select predefined sound modes to suit your video or music.

1 Press the **EQ** button on the remote control to select your desired preset equalizer effects.
There are four EQ modes in our soundbar, movie, Music, voice and Stadium. press EQ key on RC, some of the source LEDs shall flash at a rate of 200ms-ON, 200ms-off (2.5Hz). LEDs shall return to previous state without action over 3sec. Default mode is movie.

- **Movie** (5 LEDs blink): Create a surround listening experience. Ideal for watching movies.
- **Music** (4 LEDs blink): Create two-channel or multichannel stereo sound. Ideal for listening to music.
- **Voice** (3 LEDs blink): Create sound effect which makes human voice more clear and outstanding for listening.

- **Stadium** (2 LEDs blink)**:** Create an atmosphere as if watching a sports game in a stadium.

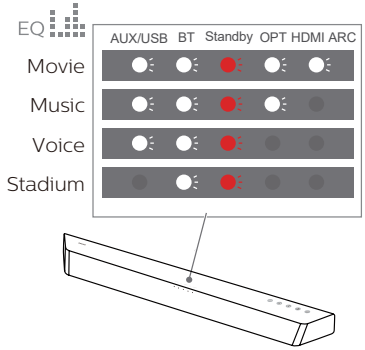


# Adjust the Volume

When adjusting the volume of the soundbar and subwoofer, the status indicator will increase / decrease the amount of light. According to the corresponding light display / blinking, determine the current volume level of the soundbar and subwoofer.

## Adjust the Volume

1 Press local key volume +/- on Soundbar or press Vol+/Vol- on remote controller to increase /decrease the
   - Press **Vol+/Vol-**

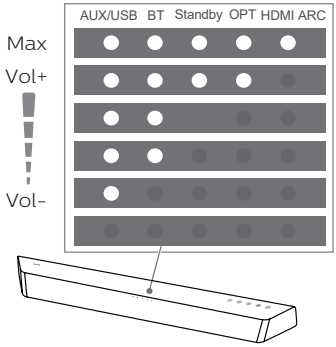


## Adjust the Treble and Bass Volume

2 Press **- BASS +**
Press -Bass + on the remote control to increase/decrease Subwoofer's volume.

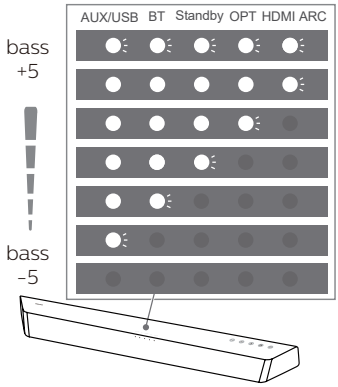


3 Press **- Treble +**
Press -Treble + on the remote control to increase/decrease Treble's volume.

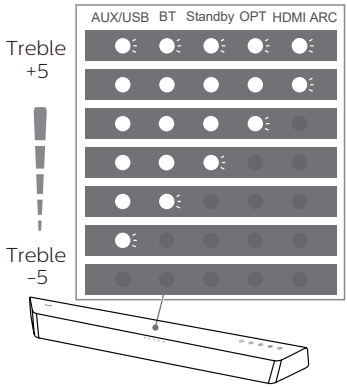


By default, the Bass/Treble is set to 0.

# Factory Reset

Reset device to default setting.

1 Soundbar is ON.
2 Press and hold local keys Vol+ and Vol- for 8 secs, after all LEDs light up for 5 seconds , Standby LED in Red.

# Bluetooth Operation

Through Bluetooth, connect the Soundbar with your Bluetooth device (such as an iPad, iPhone, iPod touch, Android phone, or laptop), and then you can listen to the audio files stored on the device through your Soundbar speakers.

### What you need

- A Bluetooth device which supports Bluetooth profile A2DP, AVRCP and with Bluetooth version as 5.0 + EDR.
- The maximum operational range between the Soundbar and a Bluetooth device is approximately 10 meters (30 feet).

1 Press the button repeatedly on the unit or press **Pair/BT** button on the remote control to switch the Soundbar to Bluetooth mode.
→ The BT indicator will blink.

2 On the Bluetooth device, switch on Bluetooth, search for and select **Philips TAB7207** to start connection (see the user manual of the Bluetooth device on how to enable Bluetooth).
→ During connection, the BT indicator will blink.

3 Wait until you hear voice prompt from the Soundbar.
→ If the successfully connected, the BT indicator will light up solidly.

4 Select and play audio files or music on your Bluetooth device.
- During play, if a call is coming, music play is paused. Play resumes when the call ends.
- If your Bluetooth device supports AVRCP profile, on the remote control you can press ⏮ / ⏭ to skip to a track, or press ▶II to pause/resume play.

5 To exit Bluetooth, you can:
- Switch the unit to another source.
- Disable the function from your Bluetooth device. Or place your Bluetooth device out of the maximum operational range. The Bluetooth device will be disconnected from the unit after the voice prompt.
- Press and hold the **BT/Pair** button on the remote control or the button on the unit.

**Tips**

- The music streaming may be interrupted by obstacles between the device and Soundbar, such as wall, metallic casing that covers the device, or other devices nearby that operate in the same frequency.
- If you want to connect your Soundbar with another Bluetooth device, press and hold **BT/Pair** on the remote control to disconnect the currently connected Bluetooth device.

# USB Operation

Enjoy audio on a USB storage device, such as an MP3 player and USB flash memory, etc.

1 Insert the USB device.

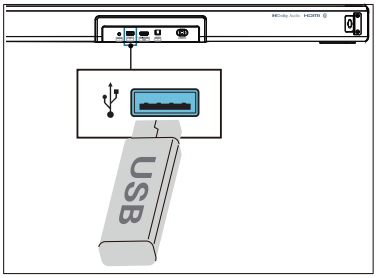


2 Press the button repeatedly on the unit or press the **USB** button on the remote control to select **USB** mode.
↳ [AUX/USB] LED indicator blinks white.

3 During playback:

| Button | Action |
|---|---|
| ▶II | Start, pause or resume play |
| I◀◀ | Skip to the previous track |
| ▶▶I | Skip to the next track |

Tips

- This product may not be compatible with certain types of USB storage devices.
- If you use a USB extension cable, USB hub, or USB Multifunctional card reader, the USB storage device may not be recognized.
- Do not remove the USB storage device while reading files.
- The unit can support USB devices with up to 32 GB of memory.
- This unit can play MP3 / WAV / WMA.
- Support a USB port: 5V ⎓ 500mA.

# AUX / OPTICAL / HDMI ARC Operation

Ensure that the unit is connected to the TV or audio device.

1 Press the button repeatedly on the unit or press the **AUX**, **OPTICAL** , **HDMI ARC** buttons on the remote to select the desired mode.
↳ The indicator light on the Soundbar will show which mode is currently in use.

| Status | LED State |
|---|---|
| AUX | [AUX/USB] Solid white |
| OPTICAL | [OPTICAL] Solid white |
| HDMI ARC | [HDMI ARC] Solid white |

2 Operate your audio device directly for playback features.

3 Press the +/- (Volume) buttons to adjust the volume to your desired level.

Tip

- While in OPTICAL/HDMI ARC mode, if there's no sound output from the unit and the status Indicator flashes, you may need to activate **PCM** or **Dolby Digital** Signal output on your source device (e.g. TV, DVD or Blu-ray player).

# 5 Product specifications

Note

- Specifications and design are subject to change without notice.

## Bluetooth

| | |
|---|---|
| Bluetooth profiles | A2DP, AVRCP |
| Bluetooth version | V 5.0 |
| Bluetooth frequency band | 2400 ~ 2483 MHz |
| Transmitter power | ≤ 5dBm |
| 2.4G Wireless Frequency Range/ Transmitter power | 2400 ~2483 MHz/ ≤13dBm |

## Soundbar

| | |
|---|---|
| Power supply | 100-240V~ 50/60Hz |
| output power by speaker | 160W RMS @<10% THD; 320W MAX. |
| Power consumption | 30 W |
| Standby consumption | < 0.5 W |
| USB | 5V ⎓ 500mA |
| Frequency response | 150Hz - 20KHz |
| Speakers impedance | 8Ω x 2 |
| Dimension (WxHxD) | 800 x 65 x 106 mm |
| Weight | 2.1kg |
| Operating temperature | 0°C - 45°C |

## Subwoofer

| | |
|---|---|
| Power Supply | 100-240 V~ 50-60 H |
| Output Power | 100 W RMS@≤10% THD; 320W MAX. |
| Power Consumption | 45 W |
| Standby Power Consumption | < 0.5 W |
| Frequency Response | 40Hz - 150Hz |
| Impedance | 4 Ω |
| Dimensions (W x H x D) | 400 x 300 x 150 mm |
| Weight | 4.7 kg |
| Operating Temperature | 0°C - 45°C |

## Remote control

| | |
|---|---|
| Distance/Angle | 6m/30° |
| Battery type | AAA (1.5V X 2) |

Supported Audio formats

- HDMI ARC
  Dolby Digital, Dolby Digital plus, PCM 2ch
- OPTICAL
  Dolby Digital, PCM 2ch
- BLUETOOTH
  SBC
- USB
  MP3, WAV, WMA

# 6 Troubleshooting

**Warning**

- Risk of electric shock. Never remove the casing of the product.

To keep the warranty valid, never try to repair the product yourself.

If you have problems using this product, check the following points before you request service. If you still have a problem, get support at www.philips.com/support.

## Main unit

**The buttons on the main unit do not work.**

- Disconnect form the power supply for a few minutes,then connect again.

**No power**

- Ensure that the AC cord is properly connected.
- Ensure that there is power at the AC outlet.
- Press standby button on the remote control or soundbar to turn the soundbar on.

## Sound

**No sound from the soundbar speaker.**

- Connect the audio cable from your soundbar to your TV or other devices. However, you do not need a separate audio connection when:
  - the soundbar and TV are connected through HDMI ARC connection, or
  - a device is connected to the HDMI in connector on your soundbar.
- On the remote control, select the correct audio input.
- Make sure that the soundbar is not muted.
- Reset this product to its factory settings (see 'Apply factory settings).

**Distorted sound or echo.**

- If you play audio from TV through this product, make sure that the TV is muted.

**Audio and video are not synchronized.**

- Press to synchronize the audio with the video.

**No sound from the wireless subwoofer.**

- Manually connect the subwoofer to the main unit.
- Increase the volume. Press Volume Up on the remote control or on the soundbar.
- When using either of the Digital input, if there is no audio:
  - Try setting the TV output to PCM or
  - Connect directly to your Blu-ray/ other source, some TVs do not pass through digital audio.
- Your TV may be set to variable audio output. Confirm that the audio output setting is set to FIXED or STANDARD, not VARIABLE. Consult your TV's user manual for more detailed information.
- If using Bluetooth, ensure that the volume on your source device is turned up and that the device is not muted.
- When the playback freezes and there is no sound in Wi-Fi mode, please check whether your home network is normal.

## Bluetooth

**A device cannot connect with the soundbar.**

- The device does not support the compatible profiles required for the soundbar.
- You have not enabled the Bluetooth function of the device. See the user manual of the device on how to enable the function.

- The device is not correctly connected. Connect the device correctly.
- The soundbar is already connected with another Bluetooth device. Disconnect the connected device, then try again.

**Quality of audio play from a connected Bluetooth device is poor.**

- The Bluetooth reception is poor. Move the device closer to the soundbar, or remove any obstacle between the device and the soundbar.

**I can't find the Bluetooth name of this unit on my Bluetooth device**

- Ensure the Bluetooth function is activated on your Bluetooth device.
- Re-pair the unit with your Bluetooth device.

## Remote control does not work

- Before you press any playback control button, first select the correct source.
- Reduce the distance between the remote control and the unit.
- Insert the battery with its polarities (+/-) aligned as indicated.
- Replace the battery.
- Aim the remote control directly at the sensor on the front of the unit.

## The Sound Bar turns off

- When the unit's external input signal level is too low, the unit will be turned off automatically in 15 minutes. Please increase the volume level of your external device.

## The subwoofer is idle or the indicator of subwoofer do not light up

- Please unplug power cord from the mains socket, and plug it in again after 3 minutes to reset the subwoofer.

# Trademarks:

The terms HDMI, HDMI High-Definition Multimedia Interface, and the HDMI Logo are trademarks or registered trademarks of HDMI Licensing Administrator, Inc.

Manufactured under license from Dolby Laboratories. Dolby, Dolby Audio, Pro Logic, and the double-D symbol are trademarks of Dolby Laboratories Licensing Corporation.

The Bluetooth® word mark and logos are registered trademarks owned by Bluetooth SIG, Inc. and any use of such marks by MMD Hong Kong Holding Limited is under license. Other trademarks and trade names are those of their respective owners.

Specifications are subject to change without notice. Please visit www.Philips.com/support for the latest updates and documents.

Philips and the Philips Shield Emblem are registered trademarks of Koninklijke Philips N.V. and are used under license.

This product has been manufactured by and is sold under the responsibility of MMD Hong Kong Holding Limited. or one of its affiliates, and MMD Hong Kong Holding Limited. is the warrantor in relation to this product.

UM_TAB7207_00_EN_20220106_V0.1