PHILIPS

Headphones
TAH6000

User manual

Register your product and get support at
www.philips.com/support

Contents

1 Important safety instructions 2
Hearing safety 2
General information 2

2 Your Over-ear ANC headphones 3
What's in the box 3
Other devices 3
Overview of your over-ear headphones 4

3 Get started 4
Charge the battery 4
Change the battery 5
App download 6
Pair for the first time 6
Pair with another Bluetooth device 6
Multi-point connection 7
Connect the headphones via 3.5mm audio cable 7

4 Use your headphones 8
Connect to your Bluetooth device 8
Power on/off 8
Control ANC (Active Noise Cancelation) 8
Manage your calls and music 9
Voice Assistant 9
Headphones LED indicator status 9

5 Reset the headphones 10

6 Technical data 10

7 Notice 11
Declaration of conformity 11
Disposal of your old product and battery 11
Remove the integrated battery 11
Compliance with EMF 11
Environmental information 11
Notice of compliance 11

8 Frequently asked questions 13

9 Trademarks 14

1 Important safety instructions

Hearing safety

Danger

- **To avoid hearing damage, limit the time you use headphones at high volume and set the volume to a safe level. The louder the volume, the shorter the safe listening time is.**

- Be sure to observe the following guidelines when using your headphones.
- Listen at reasonable volumes for reasonable periods of time.
- Be careful not to adjust the volume continuously upwards as your hearing adapts.
- Do not turn up the volume so high that you can't hear what's around you.
- You should use caution or temporarily discontinue use in potentially hazardous situations.
- Excessive sound pressure from headphones and headphones can cause hearing loss.
- Using headphones with both ears covered while driving is not recommended and may be illegal insome areas.
- For your safety, avoid distractions from music or phone calls while in traffic or other potentially dangerous environments.

Operating and storage temperatures and humidity

- Store in a place where the temperature is between -20°C (-4°F) and 50°C (122 °F) with up to 90% relative humidity.
- Operate in a place where the temperature is between 0°C (32°F) and 45°C (113 °F) with up to 90% relative humidity.
- Battery life may be shorter in high or low temperature conditions.

General information

To avoid damage or malfunction:

Caution

- Do not expose headphones to excessive heat.
- Do not drop your headphones.
- Headphones shall not be exposed to dripping or splashing. (Refer to the IP rating of specific product)
- Do not allow your headphones to be submerged in water.
- Do not charge your headphones when the connector or socket is wet.
- Do not use any cleaning agents containing alcohol, ammonia, benzene, or abrasives.
- Use a clean, damp cloth to clean your headphones - especially the sound conduits and the microphone holes - regularly and avoid buildup of substances such as sweat or earwax.
- If any sweat or water droplets are left in the sound conduits, air holes or microphone holes, the sound level will temporarily drop or cut out entirely. This is not a malfunction. Use a soft, damp cloth to dry the headphones thoroughly. Alternatively, remove the earbud tips, turn the sound conduits downward and gently tap the headphones about five times on a dry cloth or similar to remove any water collected inside.
- Be sure the headphones are completely dry before charging and using. Avoid using disposable alcohol pads or other substances for cleaning.
- The integrated battery shall not be exposed to excessive heat such as sunshine, fire or the like.
- Danger of explosion if battery is incorrectly replaced. Replace only with the same or equivalent type.
- To achieve the specific IP rating, the charging slot cover must be closed.
- Disposal of a battery into fire or a hot oven, or mechanically crushing or cutting a battery, can result in an explosion.
- Leaving a battery in an extremely high temperature surrounding environment can result in an explosion or the leakage of flammable liquid or gas.
- A battery subjected to extremely low air pressure may result in an explosion or the leakage of flammable liquid or gas.
- Replacement of a battery with an incorrect type risks severely damaging the headphones and the battery (for example, in the case of some lithium battery types).
- If the headset is not used for a long time, the rechargeable battery will begin to lose its charge. To avoid this loss, please fully charge the battery at least once every three months.
- To avoid risk of fire, the equipment is supplied only by external power source **which output shall comply with PS1 (with output capacity less than or equal to15W).**

2 Your over-ear ANC headphones

Congratulations on your purchase, and welcome to Philips! To fully benefit from the support that Philips offers, register your product at www.philips.com/support.
With these Philips headphones, you can:

- Enjoy convenient wireless handsfree calls
- Enjoy and control music wirelessly
- Switch between calls and music
- Enjoy noise cancellation

What's in the box

Over-ear ANC headphones TAH6000

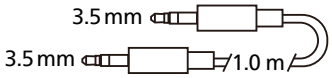

Audio cable

Quick start guide

Global Warranty

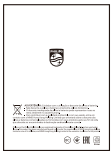

Safety leaflet

Other devices

A mobile phone or device (e.g. notebook, tablet, Bluetooth adapters, MP3 players etc) which supports Bluetooth and is compatible with the headphones (see 'Technical data' on page 10).

Overview of your Over-ear ANC headphones

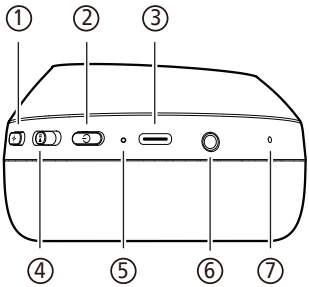

① ANC/Awareness mode button
② Power button
③ USB-C charging slot
④ Multi-Function Button (MFB)
⑤ LED indicator
⑥ 3.5mm Audio jack
⑦ Mic

3 Get started

Charge the battery

Note

1. Before you use your headphones, charge the battery for 2 hours for optimum battery capacity and lifetime.
2. Finish your call before charging. Connecting the headphones to charge will power them off.
3. If the headset is not used for a long time, the rechargeable battery will begin to lose its charge. To avoid this loss, please fully charge the battery at least once every three months.

Connect the USB charging cable:
One end to the USB-C charging slot on the headphone;
The other end to the charger/USB port of a computer.

↳ LED turns white during charging and turns off when the headphones are fully charged.

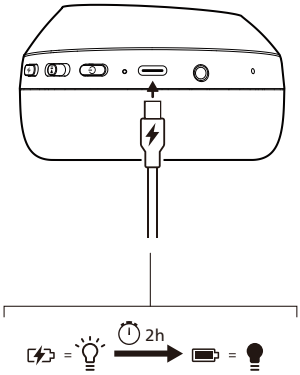

Tip

- Normally, a full charge takes two hours.

Change the battery

The battery is replaceable. Follow these steps:

1. Remove the right ear cushion from the headband.

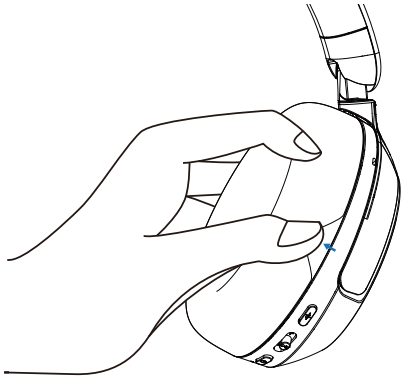

2. **Remove the sponge mat beneath it.**

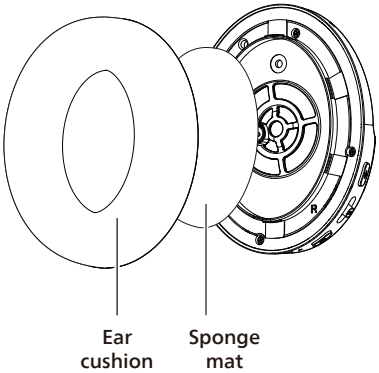

3. Use a cross-head screwdriver to remove the four screws from the driver housing and disconnect the battery connector, then remove the old battery and replace it with a new one.

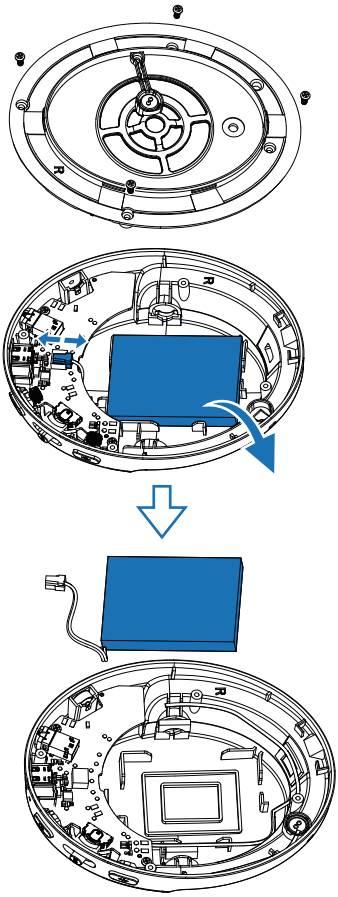

App download

Scan the QR code/press 'Download' button or search 'Philips Headphones' in the Apple App Store or Google Play to download the app.

Get Started

philips.to/headapp

The Philips Headphones App puts you in charge of the music you are listening to. You can customize the sound so that your music and calling experience always best suit your needs.

Pair the headphones with your Bluetooth device for the first time

1 Make sure that the headphones are fully charged and powered off.

2 Press and hold the power button for 2 seconds, the headphones will be in pairing mode and ready to connect.

↳ The LEDs on headphones flash white and blue alternately.

↳ The headphones are now in pairing mode and ready to pair with a Bluetooth device (e.g. a mobile phone).

3 Turn on the Bluetooth function of your Bluetooth device.

4 Pair the headphones with your Bluetooth device, refer to the user manual of your Bluetooth device.

Note

- After powering on, if the headphones can not find any previously connected Bluetooth device, please put them into pairing mode (press the MFB for 5 seconds after powering on).
- Headphones will automatically power off after 5 minutes of Bluetooth inactivity. Actual timing may vary by usage conditions.

The following example shows you how to pair the headphones with your Bluetooth device.

1 Turn on the Bluetooth function of your Bluetooth device, select **Philips TAH6000.**

2 Enter the headphones' password “**0000**” (4 zeros) if prompted. For those devices featuring Bluetooth 3.0 or higher, there is no need to enter a password.

Philips TAH6000

Pair the headphones with another Bluetooth device

If you want to pair another Bluetooth device with the headphones, turn on headphones and then press the MFB for 5 seconds and discover the second device as per normal pairing.

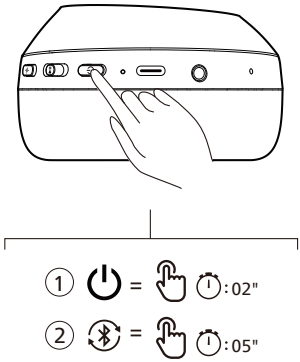

Note

- The headphones store 5 devices in the memory. If you try to pair more than 5 devices, the earliest paired device is replaced by the new one.

Multi-point connection

Pairing

- Pairing the headphones to 2 devices, e.g. mobile phone and notebook.

Switch between device

- At anytime, you can only listen to music from 1 device. Another device will be for phone call.
- Pause the audio from 1 device, then start to play audio from the another device.

Note

- When streaming audio from Device 1, receiving a call from Device 2 will automatically pause Device 1 playback. And the call will be routed automatically to headphones.
- Ending the call will automatically resume playback from device 1.

Connect the headphones to your device via 3.5mm audio cable

When the headphones' battery is depleted or your device lacks Bluetooth capability, they can be connected to the device using a 3.5mm audio cable (included in the packaging).

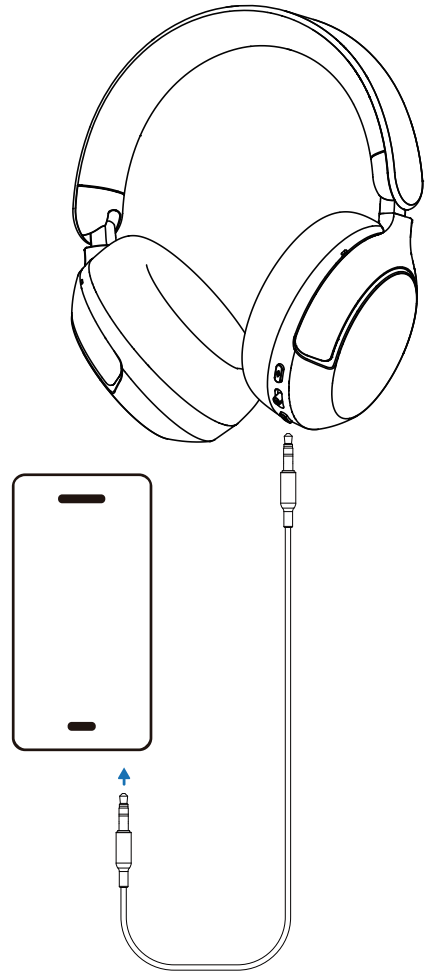

4 Use your headphones

Connect the headphones to your Bluetooth device

1 Turn on the Bluetooth function of your Bluetooth device.

2 Press and hold the Power button to turn the headphones on.

↳ The white LED will turn on in two seconds

↳ The headphones are reconnected to the last connected mobile phone/ Bluetooth device automatically

Tip

- If you turn on the Bluetooth function of your Bluetooth device after turning on the headphones, you have to go to the Bluetooth menu of the device and connect the headphones to the device manually.

Note

- In some Bluetooth devices, connection may not be automatic. In this case, you have to go to the Bluetooth menu of your device and connect the headphones to the Bluetooth device manually.

Power on/off

Task	Button	Operation
Turn the headphones on	⏻	Press and hold for 2 seconds
Turn the headphones off	⏻	Press and hold for 2 seconds (White LED is on for 3 seconds)

Control ANC (Active Noise Cancelation)

Different ANC modes can be toggled via pressing button one time on the right earcup.

- ANC function is automatically activated when headphone is placed on the ear.
- Press button one time, it will turn the ANC function off.
- Press button one time again, it will change to awareness mode.

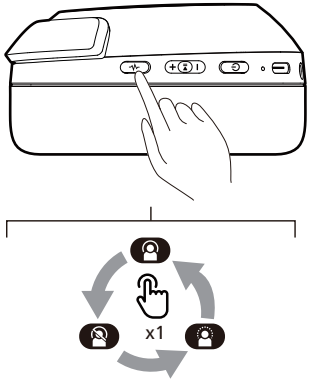

Task	Button	Operation
ANC ON		Press one time
ANC OFF		Press one time
Awareness mode		Press one time
Quick awareness		Press and hold for one second

Note

- When powered on and with battery charge, this model supports Active Noise Cancelation (ANC) both wirelessly via Bluetooth and wired via the 3.5mm jack.

Manage your calls and music

Music control

Task	Button	Operation
Play or pause music	MFB	Single press
Previous track	MFB	Push toward to "-" and hold for one second
Next track	MFB	Push toward to "+" and hold for one second
Adjust volume +	MFB	Push toward to "+"
Adjust volume -	MFB	Push toward to "-"

Note

- You will hear a tone that indicates when the volume has reached maximum level.

Call control

Task	Button	Operation
Pick up	MFB	Single press
Hang up call/ Reject call	MFB	Press and hold for 1 second

Three Way Calling

Task	Button	Operation
Hold current call and accept an incoming call	MFB	Single press
Hold current call and reject an incoming call	MFB	Press and hold for 1 second
Switch between second-way call and three-way call	MFB	Single press

Voice Assistant

Task	Button	Operation
Trigger Voice (Siri/Google) Assistant	MFB	Press twice
Stop Voice Assistant	MFB	Press once

Headphones LED indicator status

Headphones status	Indicator
The headphones are connected to a Bluetooth device	Blue LED flashes every 4 seconds
The headphones are ready for pairing	The LED flashes blue and white alternately
The headphones are on but not connected to a Bluetooth device	White LED blinks once every 6 seconds (auto turn off after 5 minutes)
Charging	White LED will be on
Charging completed	White LED will be off
Low battery	White LED will slow blink every 4 seconds
Charging error	White LED fast blink every 1 second
Power on	White LED will be on 2 seconds
Power off	White LED will be on 3 seconds

5 Reset the headphones

If you encounter any pairing or connection issue, you can follow the following procedure to reset your headphones to factory default settings.

1. On your Bluetooth device, go to the Bluetooth menu and remove **Philips TAH6000** from the device list.
2. Turn off the Bluetooth function of your Bluetooth device.
3. Turn on your headphones.
4. Press and hold Power button and ANC button for 3 seconds at the same time.
5. Follow steps in “Use your headphones-connect the headphones to your Bluetooth device.”
6. Pair the headphones with your Bluetooth device, select **Philips TAH6000**.

6 Technical data

- Music play time:
  (ANC off) 80 hours
  (ANC on) 50 hours
- Charging time: 2 hours
- Rechargeable lithium ion battery: 720 mAh
- Bluetooth version: 6.0
- Compatible Bluetooth profiles:
  - HFP
  (Hands-Free Profile)
  - A2DP
  (Advanced Audio Distribution Profile)
  - AVRCP
  (Audio Video Remote Control Profile)
- Supported audio codecs: SBC
- Frequency range: 2.4-2.4835 GHz
- Transmitter power: < 13 dBm
- Operating range: Up to 10 meters (33 feet)
- Auto power off
- USB-C port for charging
- Multi-point connection
- Fast charging time: 5 mins charging gives 4 hrs playing

Note

- Specifications are subject to change without notice.
- Battery life of playtime is approximate and may vary depending on application condition.

7 Notice

Declaration of conformity

Hereby, TP Vision Europe B.V. declares that the product is in compliance with the essential requirements and other relevant provisions of RED Directive 2014/53/EU and UK Radio Equipment Regulations SI 2017 No 1206. You can find the Declaration of Conformity on www.philips.com/support.

Disposal of your old product and battery

Your product is designed and manufactured with high quality materials and components which can be recycled and reused.

This symbol on a product means that the product is covered by European Directive 2012/19/EU.

This symbol means that the product contains batteries covered by European Regulation (EU) 2023/1542 which cannot be disposed of with normal household waste. Inform yourself about the local separate collection system for electrical and electronic products and batteries. Follow local rules and never dispose of the product and batteries with normal household waste. Correct disposal of old products and batteries helps prevent negative consequences for the environment and human health.

Remove the integrated battery

If there is no collection/recycling system for electronic products in your country, you can protect the environment by removing and recycling the battery before disposing the headphones.

↳ Follw the step of ‘Change the battery’ on page 5 to remove battery.

Compliance with EMF

This product complies with all applicable standards and regulations regarding exposure to electromagnetic fields.

Environmental information

All unnecessary packaging has been omitted. Your system consists of materials which can be recycled and reused if disassembled by a specialized company. Please observe the local regulations regarding the disposal of packaging materials, exhausted batteries and old equipment.

Notice of compliance

The device complies with the FCC rules, Part 15. Operation is subject to the following two conditions:

1. **This device may not cause harmful interference, and**

2. **This device must accept any interference received, including interference that may cause undesired operation.**

FCC rules

This equipment has been tested and found to comply with the limits for a Class B digital device, pursuant to part 15 of the FCC Rules. These limits are designed to provide reasonable protection against harmful interference in a residential installation. This equipment generates, uses and canradiate radio frequency energy and, if not installed and used in accordance with the instruction manual, may cause harmful interference to radio communications. However, there is no guarantee that interference will not occur in a particular installation. If this equipment does cause harmful interference to radio or television reception, which can be determined by turning the equipment off and on, the user is encouraged to try to correct the interference by one or more of the following measures:

- Reorient or relocate the receiving antenna
- Increase the separation between equipment and receiver

- Connect the equipment into an outlet on a circuit different from that to which the receiver is connected
- Consult the dealer or an experienced radio/TV technician for help

FCC Radiation Exposure Statement:

This equipment complies with FCC radiation exposure limits set forth for uncontrolled environments.
This transmitter must not be co-located or operating in conjunction with any other antenna or transmitter.

Caution: The user is cautioned that changes or modifications not expressly approved by the party responsible for compliance could void the user's authority to operate the equipment.

Canada:
This device contains licence-exempt transmitter(s)/receiver(s) that comply with Innovation, Science and Economic Development Canada's license-exempt RSS(s). Operation is subject to the following two conditions: (1) This device may not cause interference. (2) This device must accept any interference, including interference that may cause undesired operation of the device.

Avis de conformité
Cet appareil satisfait aux règlements de la FCC partie 15 du Code of Federal Regulations. Son fonctionnement est assujetti aux deux conditions suivantes :

1. **Cet appareil ne doit pas causer d'interférence préjudiciable et**
2. **l'appareil doit accepter toute interférence reçue, y compris les interférences qui peuvent causer un fonctionnement non désiré.**

Règlement de la FCC
Cet équipement a été testé et jugé compatible avec les limites s'appliquant aux appareils numériques de la classe B, conformément à l'article 15 du règlement de la FCC. Ces limites ont été définies pour fournir une protection raisonnable contre les interférences nuisibles dans le cadre d'une installation résidentielle. Cet équipement génère, utilise et peut émettre de l'énergie radiofréquence et, s'il n'est pas installé ni utilisé conformément aux instructions, peut causer des interférences gênantes pour les communications radio.

Rien ne garantit toutefois que des interférences ne surviendront pas dans une installation particulière. Si cet équipement cause des interférences nuisibles pour la réception de la radio ou de la télévision, ce qui peut être déterminé en mettant l'équipement hors tension puis sous tension, l'utilisateur devra essayer de corriger ces interférences en effectuant une ou plusieurs des opérations suivantes :

- Déplacez l'antenne de réception.
- Augmentez la distance entre l'équipement et le récepteur.
- Branchez l'équipement à une prise d'un circuit autre que celui sur lequel le récepteur est branché.
- Consultez le détaillant ou un technicien de radiotélévision expérimenté.

Canada :
Le présent appareil est conforme aux CNR d'Industrie Canada applicables aux appareils radio exempts de licence. L'exploitation est autorisée aux deux conditions suivantes : (1) l'appareil ne doit pas produire de brouillage, et (2) l'utilisateur de l'appareil doit accepter tout brouillage radioélectrique subi, même si le brouillage est susceptible d'en compromettre le fonctionnement.
CAN ICES-(B)/NMB-(B)

Déclaration d'IC sur l'exposition aux radiations:
Cet équipement est conforme aux limites d'exposition aux radiations définies par le Canada pour des environnements non contrôlés. Cet émetteur ne doit pas être installé au même endroit ni utilisé avec une autre antenne ou un autre émetteur.
Cet équipement devrait être installé et actionné avec une distance minimum de 0mm entre le radiateur et votre corps.

8 Frequently asked questions

My Bluetooth headphones do not turn on.
The battery level is low. Charge the headphones.

I cannot pair my Bluetooth headphones with my Bluetooth device.
The Bluetooth is disabled. Enable the Bluetooth feature on your Bluetooth device and turn on the Bluetooth device before you turn on the headphones.

How to reset pairing.
While the device is powered on, press and hold the MFB for 5 seconds until the blue and white LED alternately flashes. This triggers re-pairing mode in two cases:
1) Switching devices in multipoint connection mode;
2) Connecting to a new source device.

I hear but cannot control music on my Bluetooth device (e.g. play/pause/skip forward/backward).
Make sure the Bluetooth audio source supports AVRCP (see 'Technical data' on page 10).

The volume level of the headphones is too low.
Some Bluetooth devices cannot link the volume level with the headphones through volume sync. In this case, you have to adjust the volume on your Bluetooth device independently to achieve an appropriate volume level.

The Bluetooth device cannot find the headphones.
- The headphones may be connected to a previously paired device. Turn off the connected device or move it out of range.
- Pairing may have been reset or the headphones have been previously paired with another device. Pair the headphones with the Bluetooth device again as described in the user manual. (see 'Pair the headphones with another Bluetooth device' on page 6).

My Bluetooth headphones are connected to a Bluetooth stereo enabled mobile phone, but music only plays on the mobile phone speaker.
Refer to the user manual of your mobile phone. Select to listen to music through the headphones.

The audio quality is poor and crackling noise can be heard.
- The Bluetooth device is out of range. Reduce the distance between your headphones and Bluetooth device, or remove obstacles between them.
- Charge your headphones.

Clean your headphones regularly.
- Use a clean, damp cloth to clean your headphones - especially the sound conduits and the microphone holes - regularly and avoid buildup of substances such as sweat or earwax.
- If any sweat or water droplets are left in the sound conduits, air holes or microphone holes, the sound level will temporarily drop or cut out entirely. This is not a malfunction. Use a soft, damp cloth to dry the headphones thoroughly. Alternatively, for in-ear headphones remove the earbud tips, turn the sound conduits downward and gently tap the headphones about five times on a dry cloth or similar to remove any water collected inside.
- Be sure the headphones are completely dry before charging and using. Avoid using disposable alcohol pads or other substances for cleaning.

Charge your headphones regularly.
If the headset is not used for a long time, the rechargeable battery will begin to lose its charge. To avoid this loss, please fully charge the battery at least once every three months.

9 Trademarks

Bluetooth

The Bluetooth® word mark and logos are registered trademarks owned by Bluetooth SIG, Inc. and any use of such marks by MMD Hong Kong Holding Limited is under license. Other trademarks and trade names are those of their respective owners.

Hi-Res

The product with this logo is conformed to ”Hi-Res Audio Logo” standard and ”Hi-Res Audio Wireless Logo” standard defined by Japan Audio Society. The Logo is used under license from Japan Audio Society.

For further support, visit www.philips.com/support.

MMD Hong Kong Holding Limited. All rights reserved. Specifications are subject to change without notice.
Philips and the Philips Shield Emblem are registered trademarks of Koninklijke Philips N.V. and are used under license. This product has been manufactured by and is sold under the responsibility of MMD Hong Kong Holding Limited or one of its affiliates, and MMD Hong Kong Holding Limited is the warrantor in relation to this product. All other company and product names may be trademarks of their respective companies with which they are associated.

UM_TAH6000_00_EN_V2.0